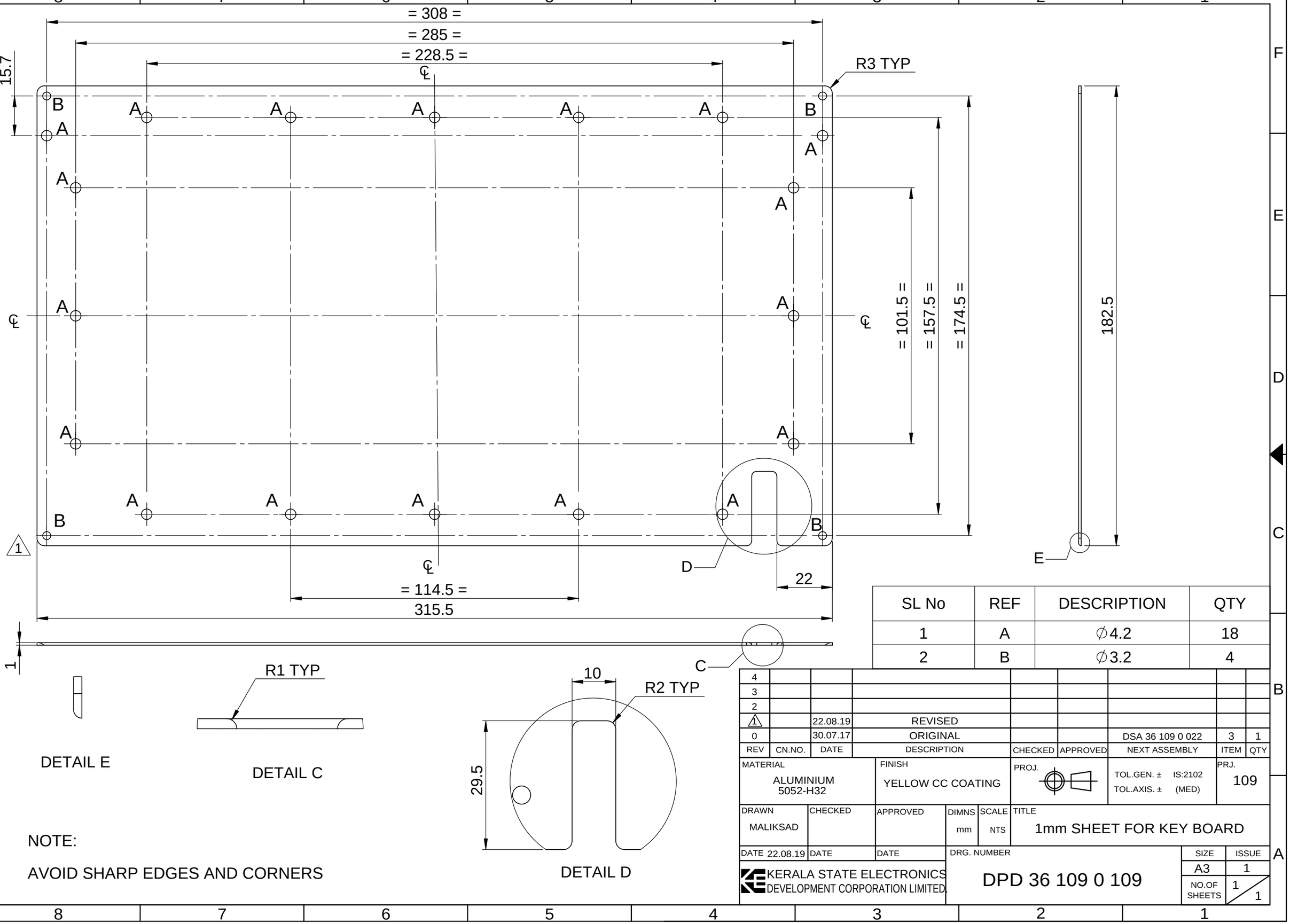

NOTE:

AVOID SHARP EDGES AND CORNERS

SL No	REF	DESCRIPTION	QTY
1	A	∅4.2	18
2	B	∅3.2	4

REV	CN.NO.	DATE	DESCRIPTION	CHECKED	APPROVED	NEXT ASSEMBLY	ITEM	QTY
4								
3								
2								
1		22.08.19	REVISED					
0		30.07.17	ORIGINAL			DSA 36 109 0 022	3	1

MATERIAL: ALUMINIUM 5052-H32	FINISH: YELLOW CC COATING	PROJ.	TOL.GEN. ± IS:2102 TOL.AXIS. ± (MED)	PRJ. 109	
DRAWN: MALIKSAD	CHECKED	APPROVED	DIMNS: mm	SCALE: NTS	TITLE: 1mm SHEET FOR KEY BOARD
DATE: 22.08.19	DATE	DATE	DRG. NUMBER: DPD 36 109 0 109	SIZE: A3	ISSUE: 1
KERALA STATE ELECTRONICS DEVELOPMENT CORPORATION LIMITED.				NO.OF SHEETS: 1 / 1	

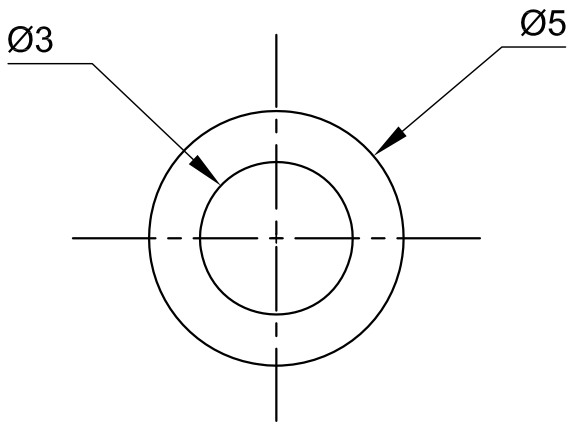

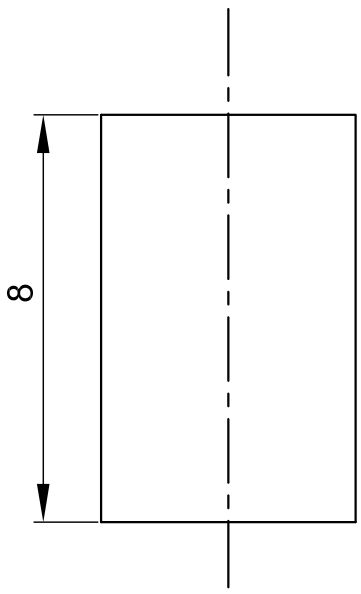

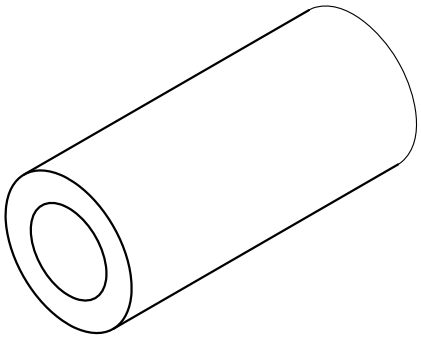

NOTE:
AVOID SHARP EDGES AND CORNERS

REV	CN.NO.	DATE	DESCRIPTION	CHECKED	APPROVED	NEXT ASSEMBLY	ITEM	QTY
4								
3								
2								
1								
0		24.08.19	ORIGINAL			DSA 36 109 0 012	24	4

MATERIAL	FINISH	PROJ.		PRJ.
NYLON	-		TOL.GEN. ± IS:2102 TOL.AXIS. ± (MED)	109

DRAWN	CHECKED	APPROVED	DIMNS	SCALE	TITLE
MALIKSAD			mm	NTS	8MM NYLON SPACER
DATE 24.08.19	DATE	DATE			

KERALA STATE ELECTRONICS DEVELOPMENT CORPORATION LIMITED.

DRG. NUMBER: DPD 36 109 0 182

SIZE	ISSUE
A4	1
NO.OF SHEETS	1 / 1

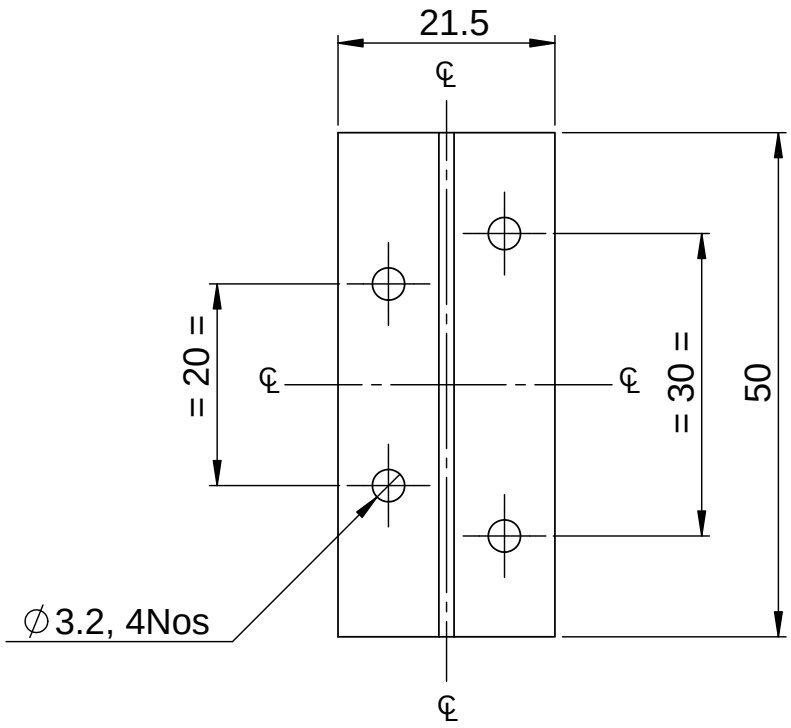

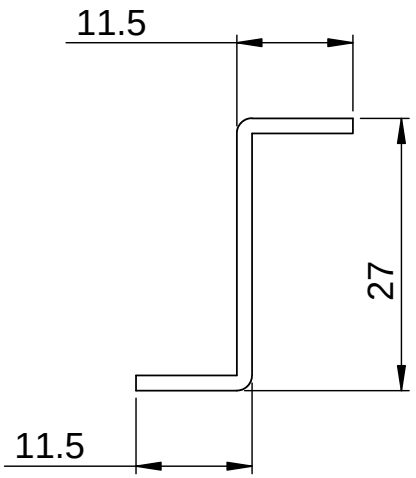

REV	CN.NO.	DATE	DESCRIPTION	CHECKED	APPROVED	NEXT ASSEMBLY	ITEM	QTY
4								
3								
2								
1								
0		08.11.16	ORIGINAL					

MATERIAL	FINISH	PROJ.	TOL.GEN. ± IS:2102 TOL.AXIS. ± (MED)	PRJ.
1.5 mm ALUMINIUM SHEET	YELLOW CC COATING			109

DRAWN	CHECKED	APPROVED	DIMNS	SCALE	TITLE
MALIKSAD			mm	NTS	CLAMP FOR ACH

DATE 08.11.16	DATE	DATE	DRG. NUMBER	SIZE	ISSUE
KERALA STATE ELECTRONICS DEVELOPMENT CORPORATION LIMITED.			DPD 36 109 0 221	A4	1
				NO.OF SHEETS	1 / 1

RESTRICTED

RESTRICTED

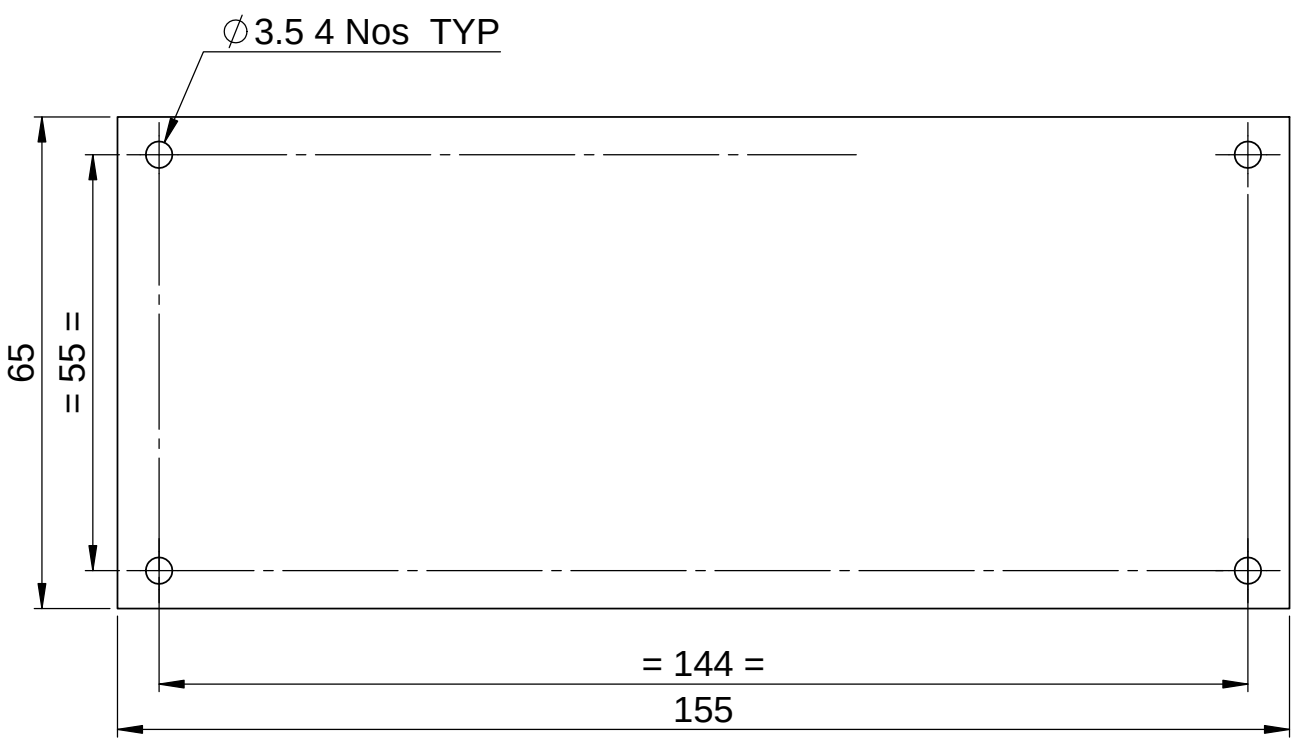

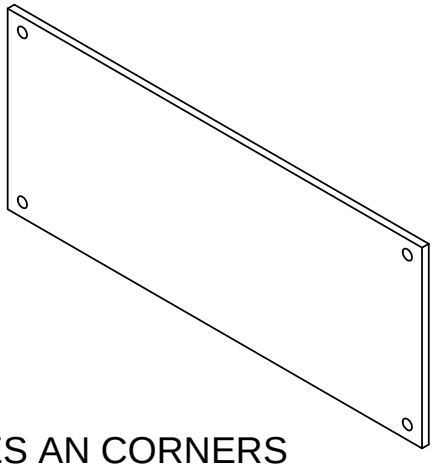

NOTE

AVOID SHARP EDGES AN CORNERS

REV	CN.NO.	DATE	DESCRIPTION	CHECKED	APPROVED	NEXT ASSEMBLY	ITEM	QTY
4								
3								
2								
1								
0		29.07.17	ORIGINAL			DSA 36 109 0 011	9	1

MATERIAL	FINISH	PROJ.		PRJ.
2.5 mm ACRYLIC SHEET	--		TOL.GEN. ± IS: 2102 TOL.AXIS. ± (MED.)	109

DRAWN	CHECKED	APPROVED	DIMNS	SCALE	TITLE
MALIKSAD			mm	NTS	ACRYLIC SHEET
DATE 29.07.17	DATE	DATE	DRG. NUMBER		SIZE / ISSUE
KERALA STATE ELECTRONICS DEVELOPMENT CORPORATION LIMITED			DPD 36 109 0 065		A4 / 1
					NO.OF SHEETS 1 / 1

RESTRICTED

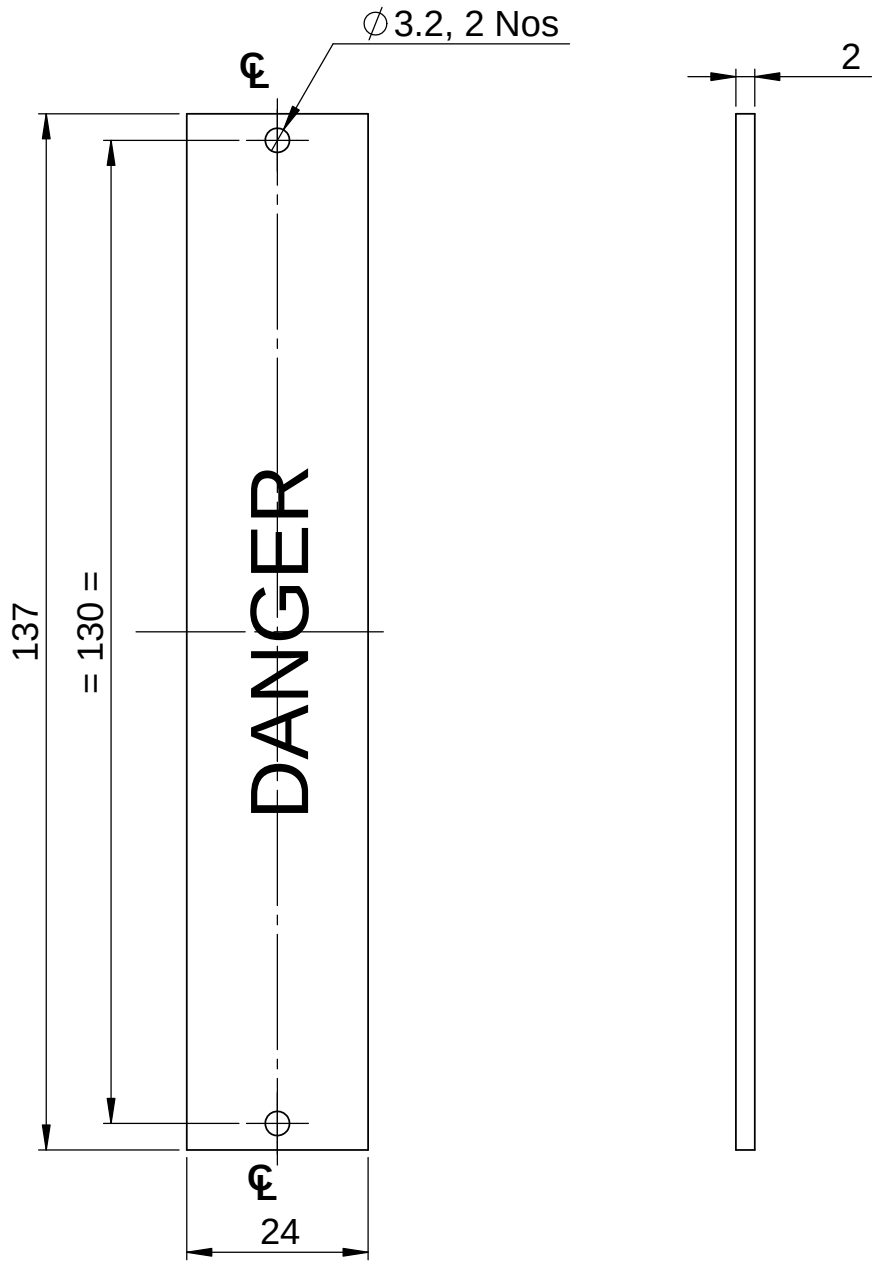

NOTE

1. 8mm HEIGHT TEXT TO BE ENGRAVED,FILLED WITH RED COLOUR PAINT AND ALIGNED TO CENTRE
2. AVOID SHARP CORNERS AND EDGES

1

REV	CN.NO.	DATE	DESCRIPTION	CHECKED	APPROVED	NEXT ASSEMBLY	ITEM	QTY
4								
3								
2								
1		22.08.19	REVISED					
0		01.08.16	ORIGINAL			DSA 36 109 0 017	6	2

MATERIAL: 2 mm ACRYLIC SHEET	FINISH: -------	PROJ.	TOL.GEN. ± IS: 2102 TOL.AXIS. ± (MED.)	PRJ. 109	
DRAWN: MALIKSAD	CHECKED	APPROVED	DIMNS: mm / SCALE: NTS	TITLE: ACRYLIC SHEET-TB	
DATE: 22.08.19	DATE	DATE	DRG. NUMBER: DPD 36 109 0 086	SIZE: A4	ISSUE: 1
KERALA STATE ELECTRONICS DEVELOPMENT CORPORATION LIMITED				NO.OF SHEETS: 1 / 1	

RESTRICTED

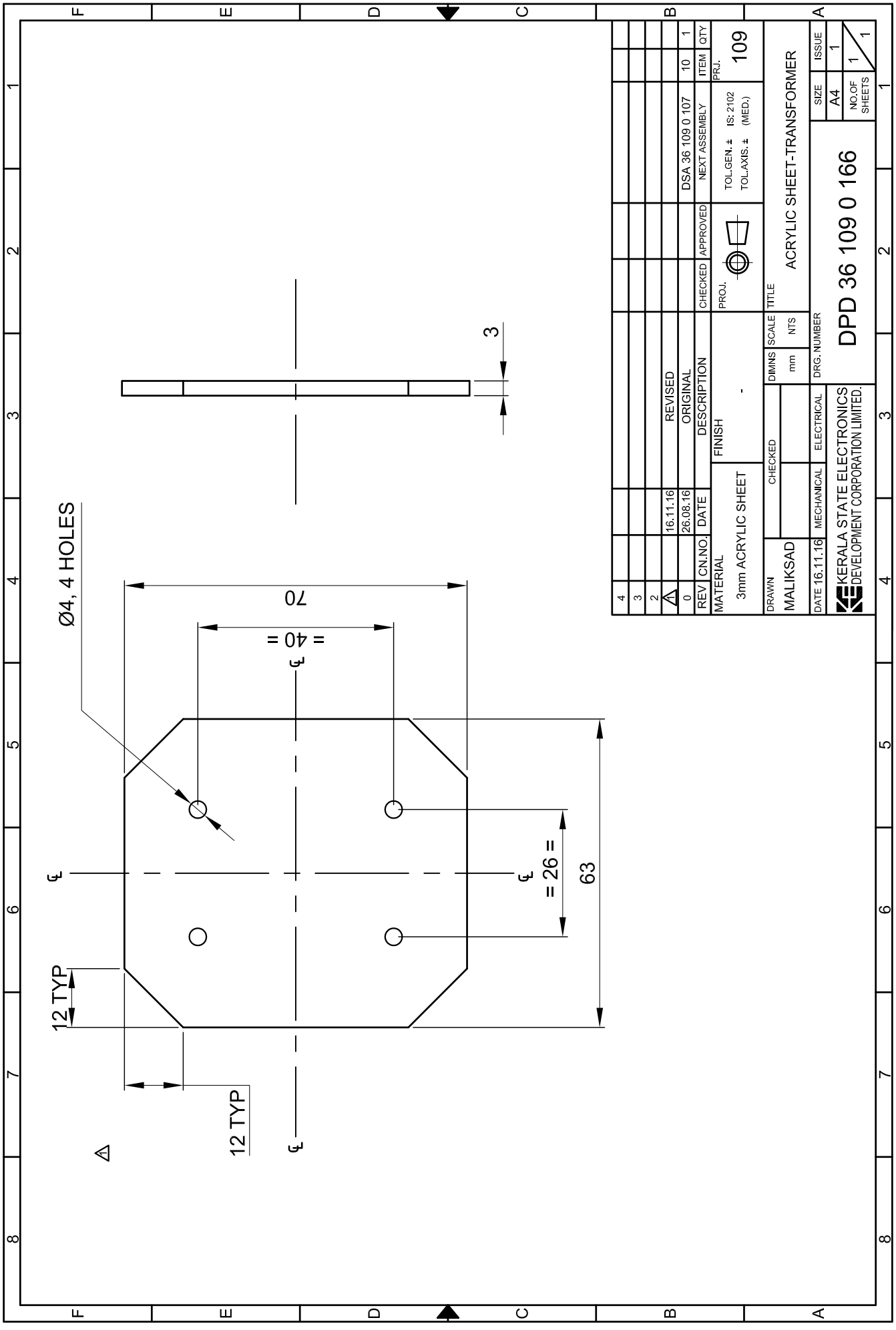
Ø4, 4 HOLES
70
= 40 =
63
= 26 =
12 TYP
12 TYP
3
REVISED
ORIGINAL
DESCRIPTION
16.11.16
26.08.16
DATE
CN.NO.
REV
MATERIAL
3mm ACRYLIC SHEET
FINISH
-
PROJ.
CHECKED
APPROVED
DSA 36 109 0 107
NEXT ASSEMBLY
ITEM
QTY
10
1
PRJ.
109
TOL.GEN. ± IS: 2102
TOL.AXIS. ± (MED.)
DRAWN
MALIKSAD
DATE 16.11.16
CHECKED
MECHANICAL
ELECTRICAL
DIMNS
mm
SCALE
NTS
TITLE
ACRYLIC SHEET-TRANSFORMER
DRG. NUMBER
DPD 36 109 0 166
KERALA STATE ELECTRONICS
DEVELOPMENT CORPORATION LIMITED.
SIZE
A4
ISSUE
1
NO.OF SHEETS
1
1

RESTRICTED

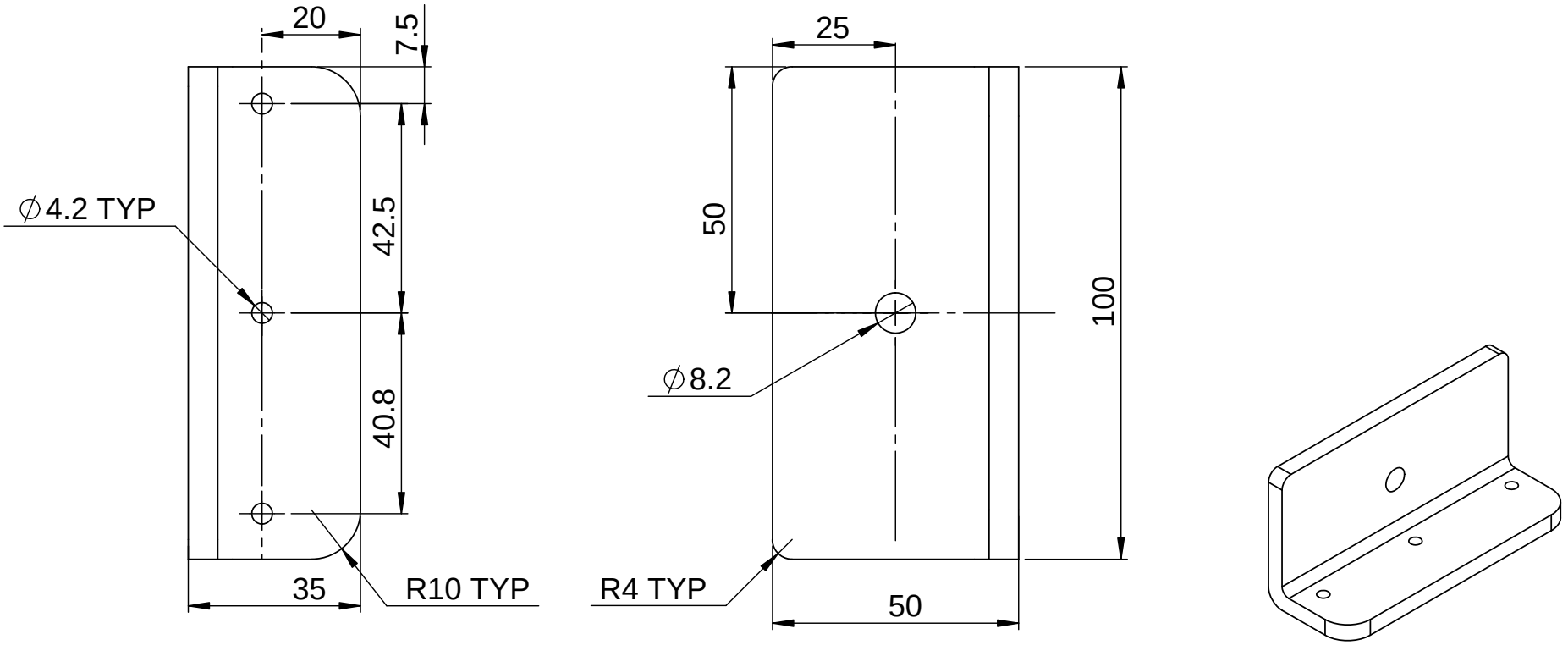

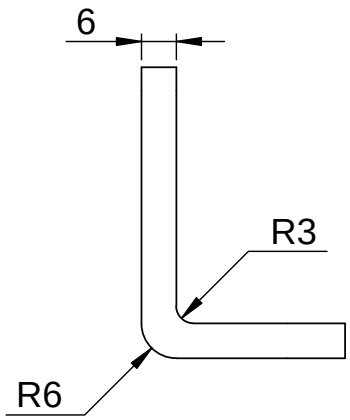

4								
3								
2								
1								
0		24.09.16	ORIGINAL			XXXX	XX	XX
REV	CN.NO.	DATE	DESCRIPTION	CHECKED	APPROVED	NEXT ASSEMBLY	ITEM	QTY

MATERIAL: ALUMINIUM-HE30	FINISH:	PROJ.	TOL.GEN. ± IS: 2102 TOL.AXIS. ± (MED.)	PRJ. 109	
DRAWN: MALIKSAD	CHECKED	APPROVED	DIMNS: mm / SCALE: NTS	TITLE: AKCC FIXING L ANGLE-L	
DATE 24.09.16	DATE	DATE	DRG. NUMBER: DPD 36 109 0	SIZE: A4	ISSUE: 1
KERALA STATE ELECTRONICS DEVELOPMENT CORPORATION LIMITED				NO.OF SHEETS: 1 / 1	

RESTRICTED

RESTRICTED

DEVIATION FOR NON - TOLERANCED DIMENSIONS (IS : 2102 - MEDIUM)											
ABOVE	0.5	6	30	120	315	1000	LENGTH IN mm OF SHORTER SIDE OF ANGLE				
UP TO	6	30	120	315	1000	2000	ABOVE & UP TO	0.5 - 6	6 - 30	30 - 120	120 - 400
TOL.	±0.1	±0.2	±0.3	±0.5	±0.8	±1.2	TOL.	± 1°	± 30'	± 20'	± 10'

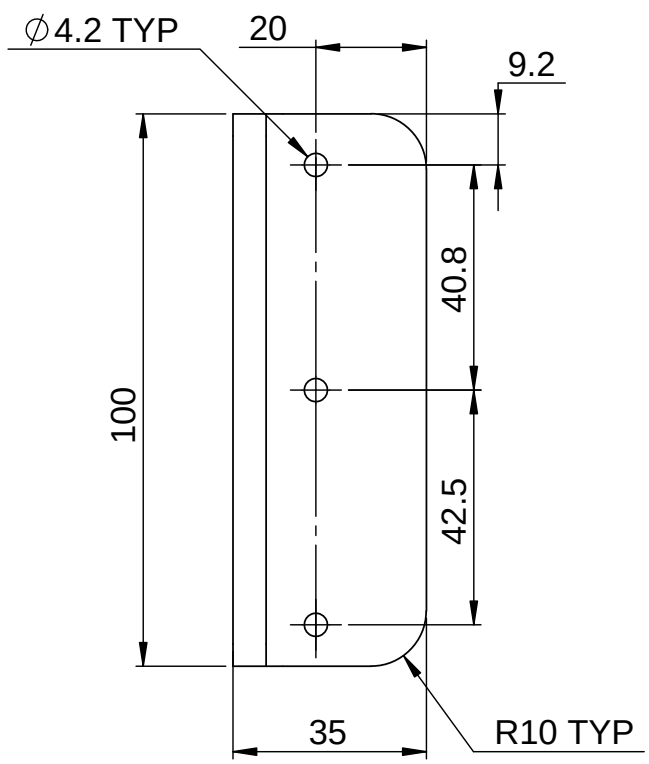

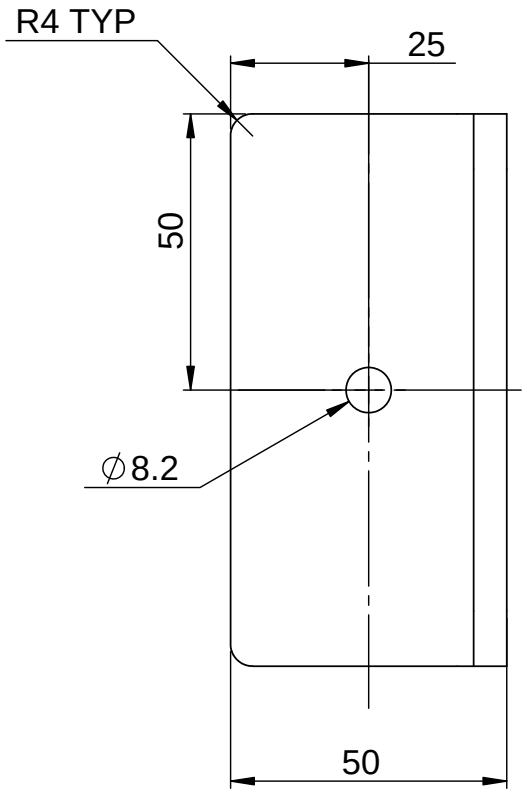

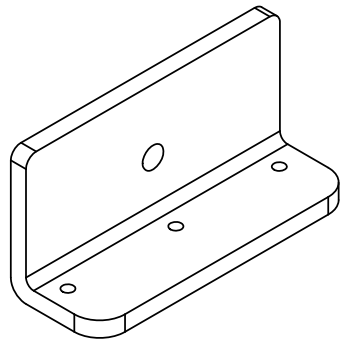

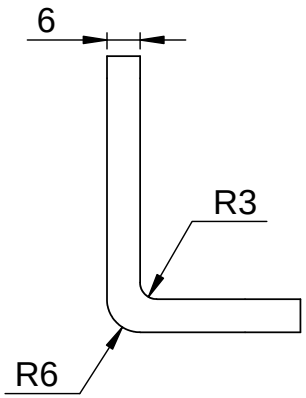

REV	CN.NO.	DATE	DESCRIPTION	CHECKED	APPROVED	NEXT ASSEMBLY	ITEM	QTY
4								
3								
2								
1								
0		XXXX	ORIGINAL			XXXX	XX	XX

MATERIAL	FINISH	PROJ.	TOL.GEN. ± IS: 2102 TOL.AXIS. ± (MED.)	PRJ.
XXXX	XXXX			109

DRAWN	CHECKED	APPROVED	DIMNS	SCALE	TITLE
XXXX	XXXX	XXXX	mm	NTS	AKCC FIXING L- ANGLE-R

DATE XXXX	DATE	DATE	DRG. NUMBER	SIZE	ISSUE
KERALA STATE ELECTRONICS DEVELOPMENT CORPORATION LIMITED			XXXXXX	A4	1
				NO.OF SHEETS	1 / 1

RESTRICTED

RESTRICTED

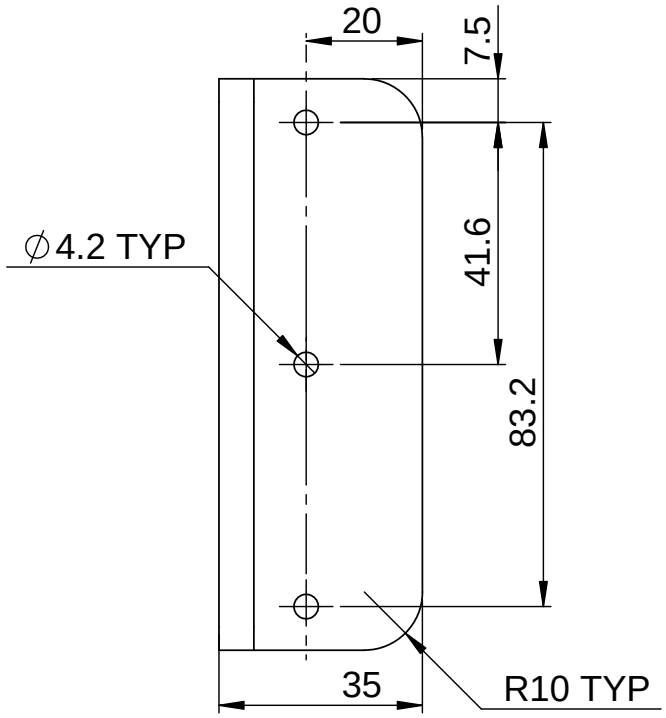

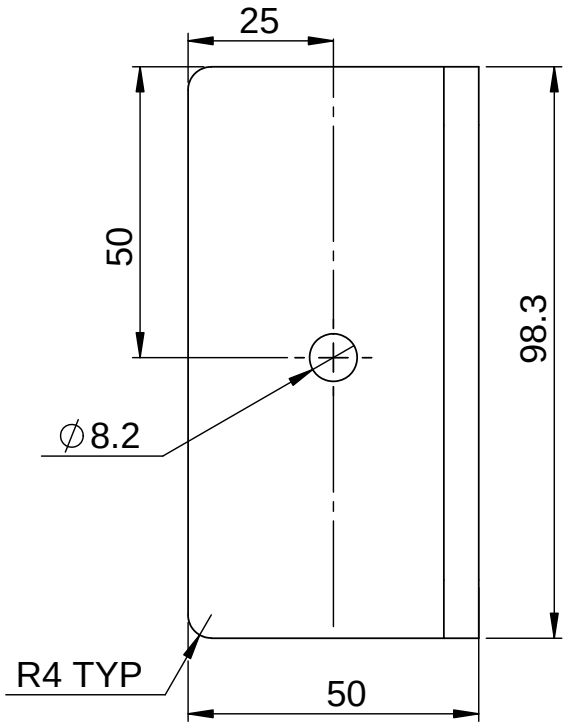

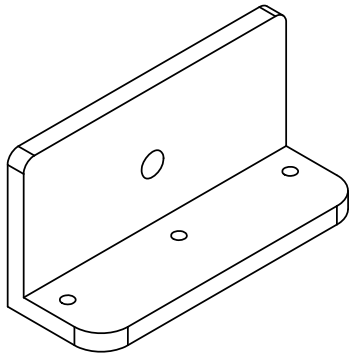

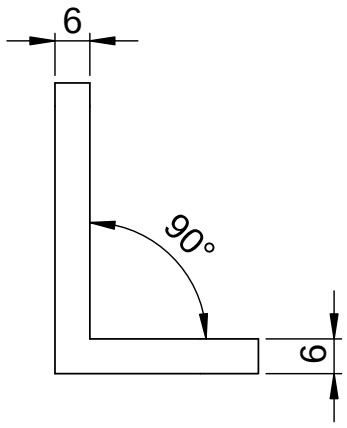

REV	CN.NO.	DATE	DESCRIPTION	CHECKED	APPROVED	NEXT ASSEMBLY	ITEM	QTY
4								
3								
2								
1								
0		24.09.16	ORIGINAL			DSA 36 109 0 023	2	1

MATERIAL	FINISH	PROJ.	TOL.GEN. ± IS: 2102 TOL.AXIS. ± (MED.)	PRJ.
ALUMINIUM-HE30	YELLOW CC COATING			109

DRAWN	CHECKED	APPROVED	DIMNS	SCALE	TITLE
MALIKSAD			mm	NTS	AKCC FIXING L ANGLE
DATE 24.09.16	DATE	DATE	DRG. NUMBER		SIZE: A4 / ISSUE: 1
KERALA STATE ELECTRONICS DEVELOPMENT CORPORATION LIMITED			DPD 36 109 0 125		NO.OF SHEETS: 1 / 1

RESTRICTED

RESTRICTED

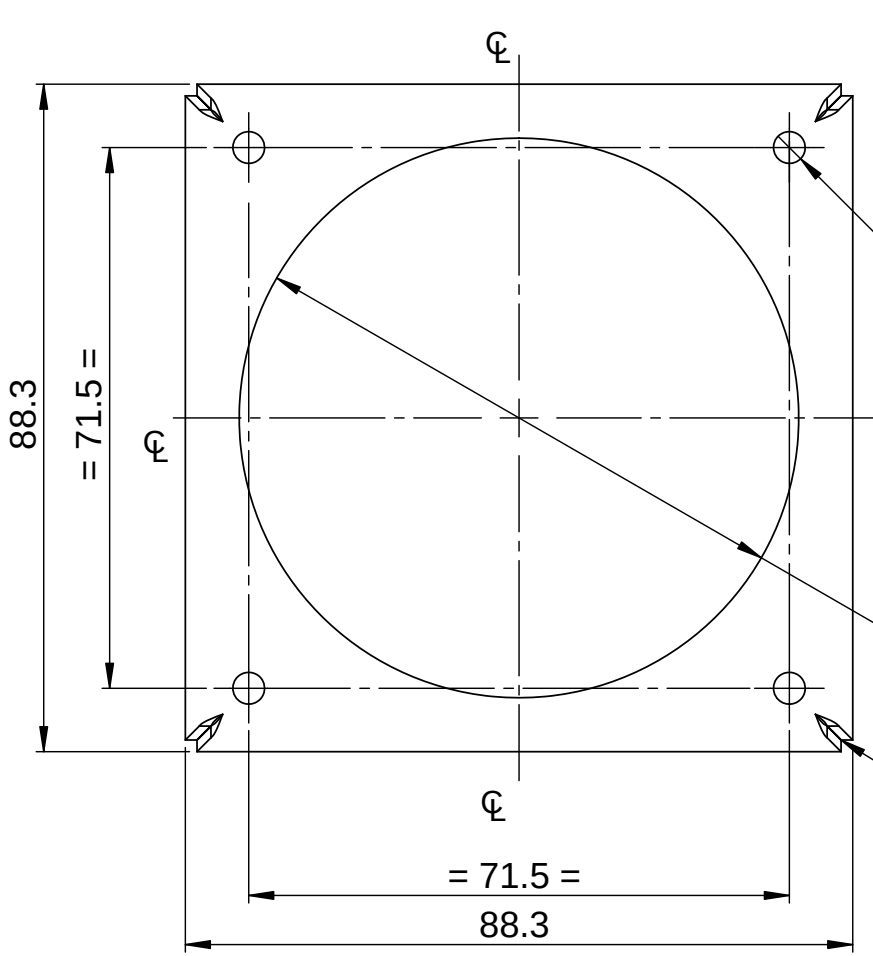

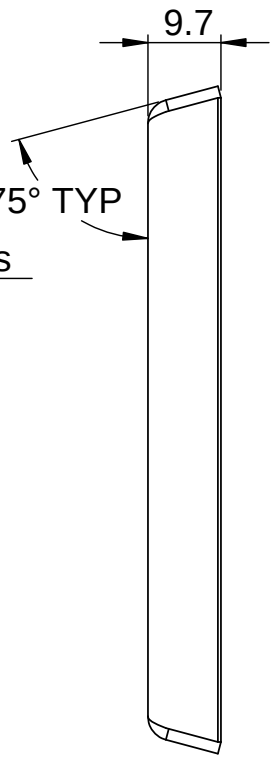

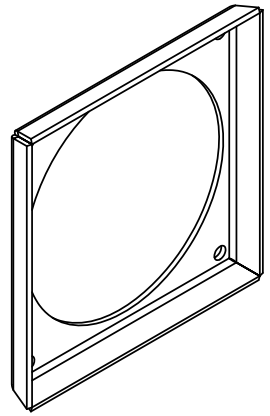

∅4.2 , 4 Nos

∅74 △1

ALL CORNERS TO BE WELDED AND GRIND SMOOTH

NOTE:

1. AVOID SHARP EDGES AND CORNERS
2. ALL BURRS MUST BE REMOVED

REV	CN.NO.	DATE	DESCRIPTION	CHECKED	APPROVED	NEXT ASSEMBLY	ITEM	QTY
4								
3								
2								
△1		21.08.19	REVISED					
0		24.09.17	ORIGINAL			DSA 36 109 0 055	1	1

MATERIAL	FINISH	PROJ.		PRJ.
2 mm ALUMINIUM H32-5052	YELLOW CC COATING		TOL.GEN. ± IS: 2102 TOL.AXIS. ± (MED.)	109

DRAWN	CHECKED	APPROVED	DIMNS	SCALE	TITLE
MALIKSAD			mm	NTS	BAFFLE PLATE
DATE 21.08.19	DATE	DATE	DRG. NUMBER		SIZE: A4 · ISSUE: 1
KERALA STATE ELECTRONICS DEVELOPMENT CORPORATION LIMITED			DPD 36 109 0 055		NO.OF SHEETS: 1 / 1

RESTRICTED

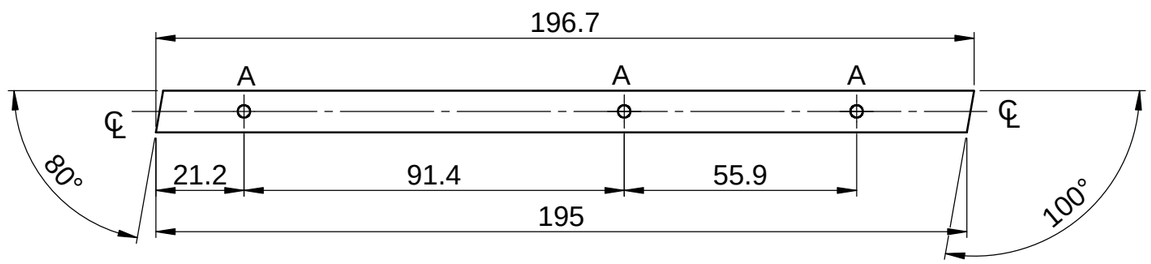

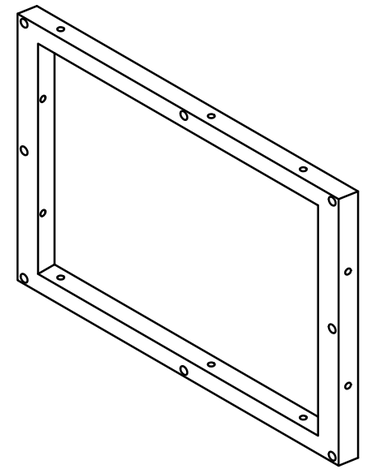

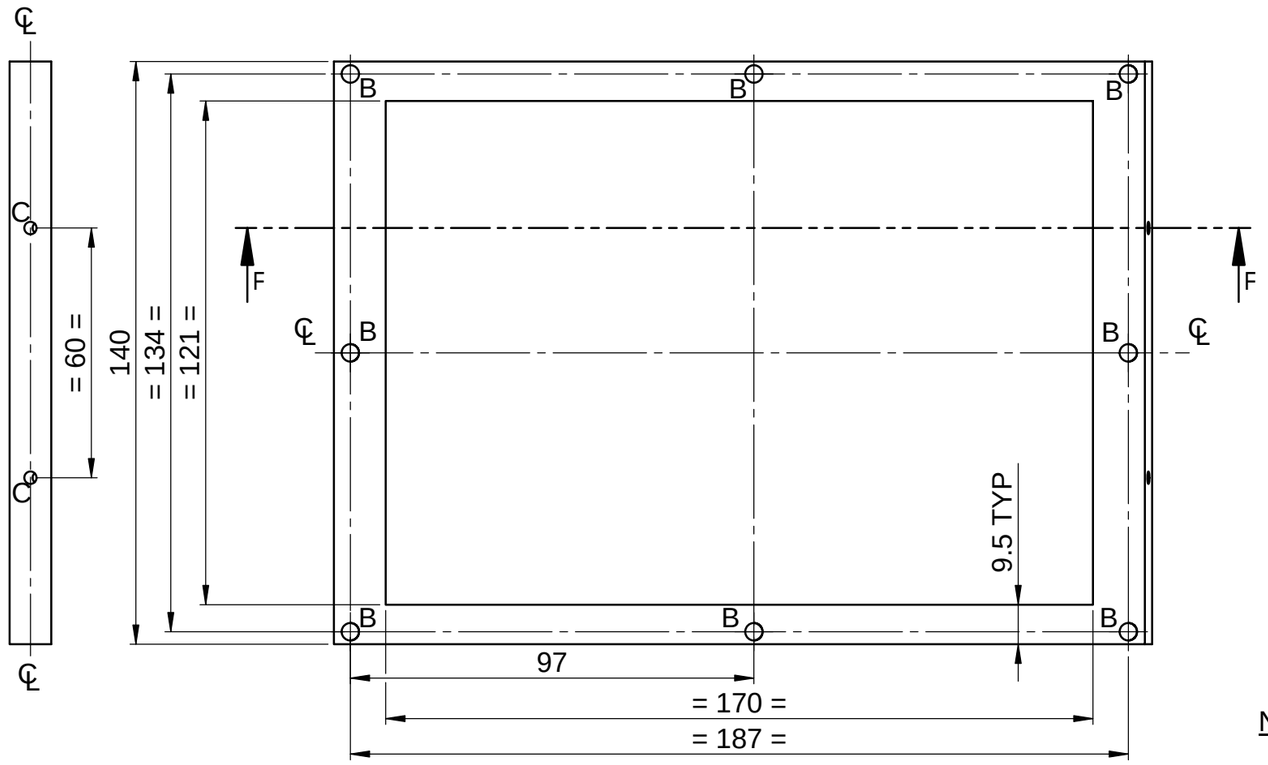

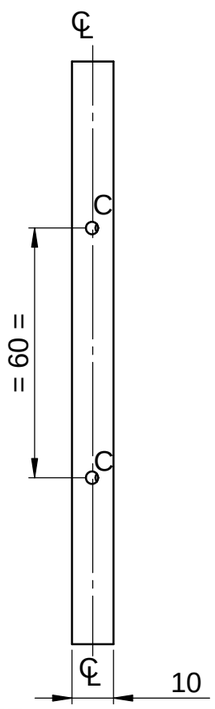

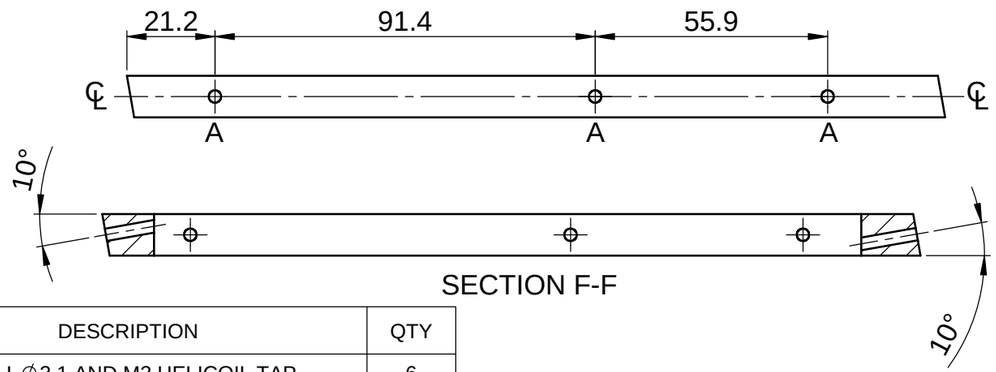

SECTION F-F

SL NO.	REF	DESCRIPTION	QTY
1	A	DRILL ∅3.1 AND M3 HELICOIL TAP	6
2	B	DRILL ∅4.1, ↧9MM AND M4 HELICOIL TAP	8
3	C	DRILL ∅3.1 AND M3 HELICOIL TAP	4

NOTE

1. AVOID SHARP CORNERS AND EDGES
2. ALL BURRS MUST BE REMOVED

REV	CN.NO.	DATE	DESCRIPTION	CHECKED	APPROVED	NEXT ASSEMBLY	ITEM	QTY
4								
3								
2								
1								
0		19.08.16	ORIGINAL			DSA 36 109 0 018	10	1

MATERIAL: ALUMINIUM-HE30	FINISH: YELLOW CC COATING	PROJ.	TOL.GEN. ± IS:2102 TOL.AXIS. ± (MED)	PRJ. 109	
DRAWN: MALIKSAD	CHECKED	APPROVED	DIMNS: mm	SCALE: NTS	TITLE: BAR TOP FAN FIXING
DATE 19.08.16	DATE	DATE	DRG. NUMBER: DPD 36 109 0 077	SIZE: A3	ISSUE: 1
KERALA STATE ELECTRONICS DEVELOPMENT CORPORATION LIMITED.				NO.OF SHEETS: 1 / 1	

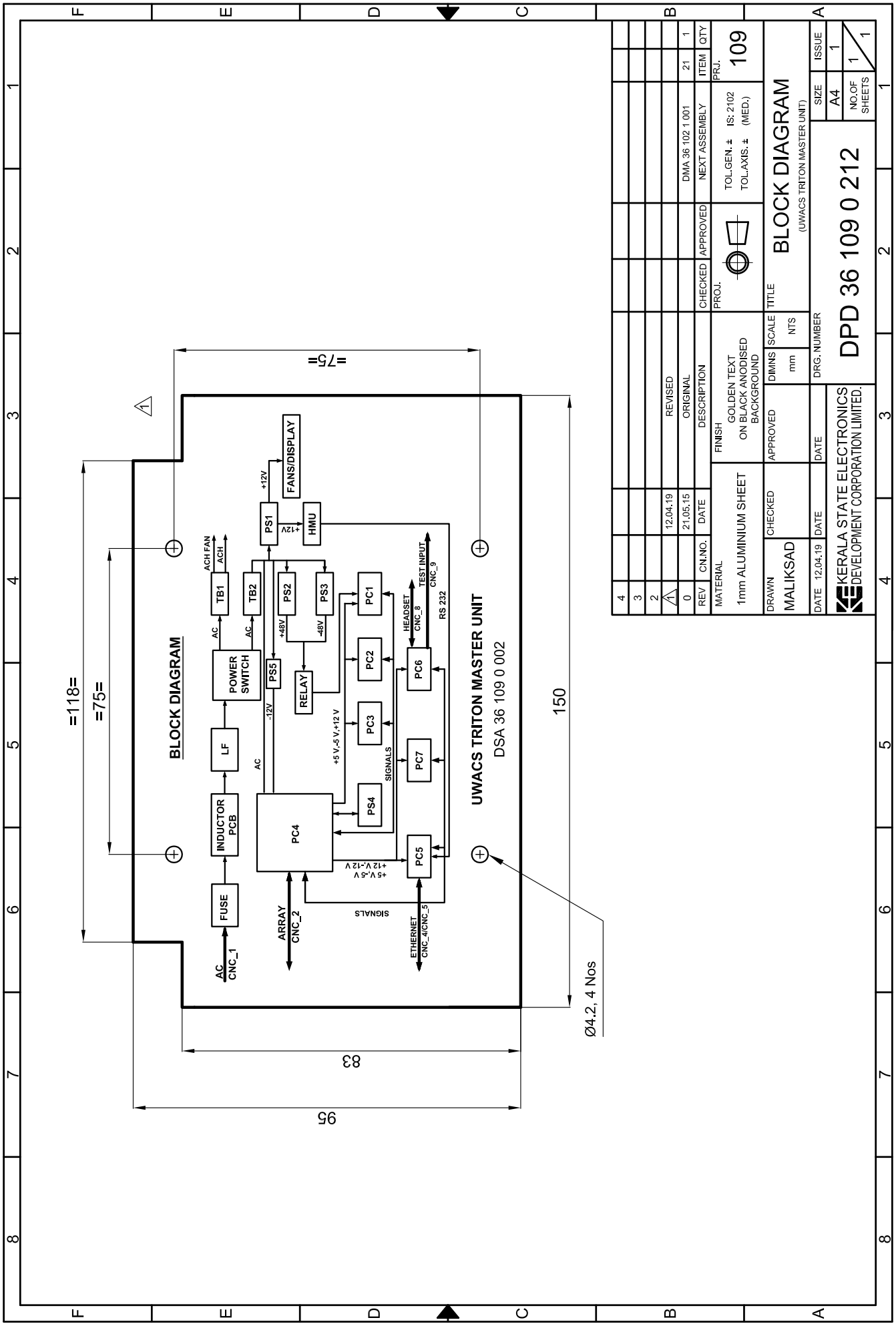

REV	CN.NO.	DATE	DESCRIPTION
4			
3			
2			
1		12.04.19	REVISED
0		21.05.15	ORIGINAL

ITEM	QTY	NEXT ASSEMBLY
21	1	DMA 36 102 1 001

CHECKED	APPROVED	PRJ.
		109

TOL.GEN. ± IS: 2102
TOL.AXIS. ± (MED.)

MATERIAL: 1mm ALUMINIUM SHEET
FINISH: GOLDEN TEXT ON BLACK ANODISED BACKGROUND

DRAWN	CHECKED	APPROVED	DIMNS	SCALE
MALIKSAD			mm	NTS
DATE 12.04.19	DATE	DATE	DRG. NUMBER	

TITLE: BLOCK DIAGRAM
(UWACS TRITON MASTER UNIT)

KERALA STATE ELECTRONICS DEVELOPMENT CORPORATION LIMITED.

DPD 36 109 0 212

SIZE: A4 | ISSUE: 1 | NO.OF SHEETS: 1 / 1

RESTRICTED

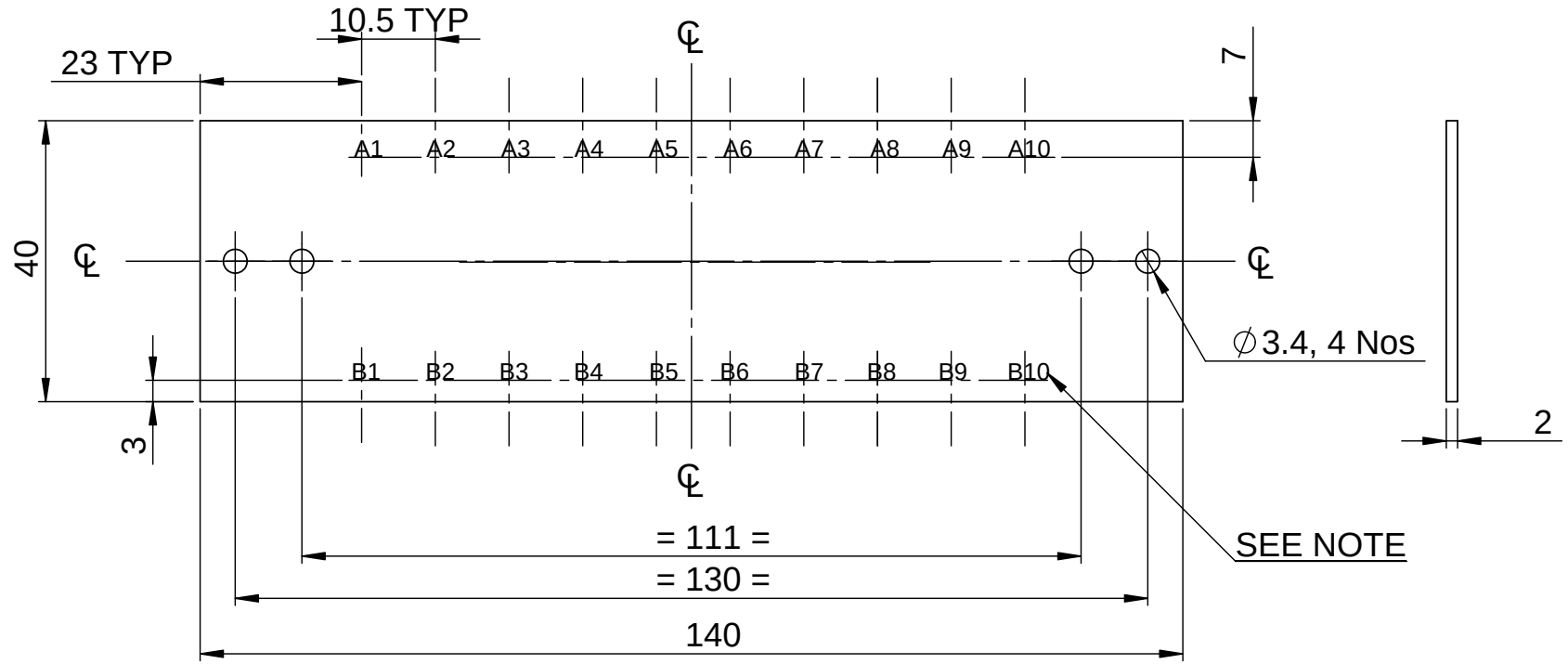

NOTE

1. AVOID SHARP CORNERS AND EDGES
2. 2.5mm HEIGHT TEXT TO BE ENGRAVED, FILLED WITH BLACK COLOUR AND CENTRALISED TO CORRESPONDING LINES

1

REV	CN.NO.	DATE	DESCRIPTION	CHECKED	APPROVED	NEXT ASSEMBLY	ITEM	QTY
4								
3								
2								
1		22.08.19	REVISED					
0		09.11.16	ORIGINAL			DSA 36 109 0 017	21	02

MATERIAL	FINISH	PROJ.	TOL.GEN. ± IS: 2102 TOL.AXIS. ± (MED.)	PRJ.
2 mm ACRYLIC SHEET	.....			109

DRAWN	CHECKED	APPROVED	DIMNS	SCALE	TITLE
MALIKSAD			mm	NTS	BOTTOM ACRYLIC SHEET FOR TB
DATE 22.08.19	DATE	DATE	DRG. NUMBER		SIZE A4 / ISSUE 1

KERALA STATE ELECTRONICS DEVELOPMENT CORPORATION LIMITED

DPD 36 109 0 222

NO.OF SHEETS 1 / 1

RESTRICTED

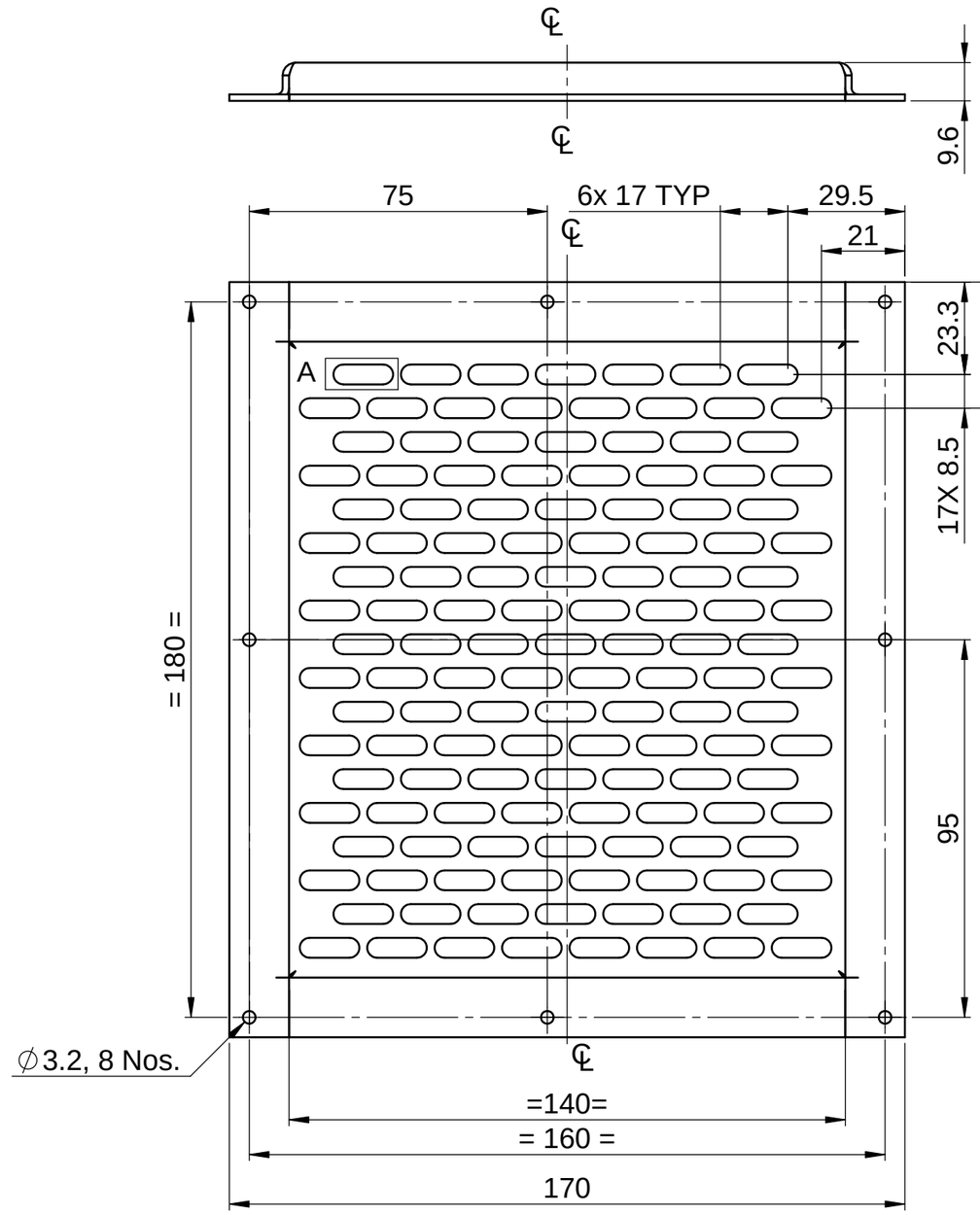

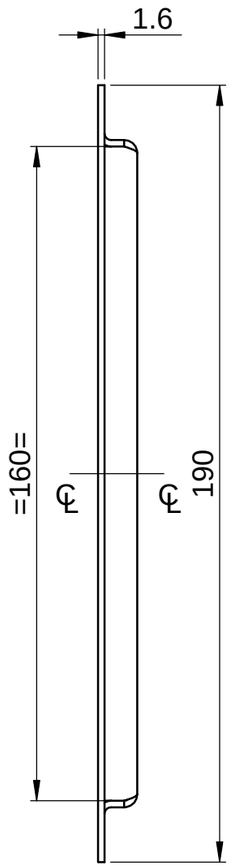

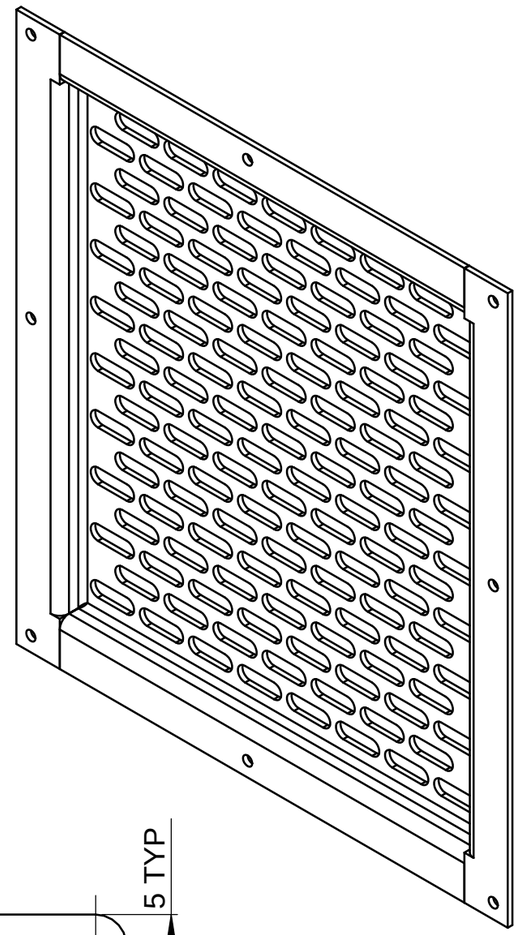

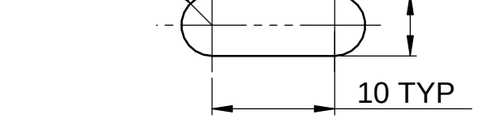

DETAIL A

NOTE

1. AVOID SHARP CORNERS AND EDGES

REV	CN.NO.	DATE	DESCRIPTION	CHECKED	APPROVED	NEXT ASSEMBLY	ITEM	QTY
4								
3								
2								
1								
0		19.08.17	ORIGINAL			DSA 36 109 0 014	2	1

MATERIAL: ALUMINIUM H32-5052	FINISH: YELLOW CC COATING	PROJ.	TOL.GEN. ± IS:2102 TOL.AXIS. ± (MED)	PRJ. 109	
DRAWN: MALIKSAD	CHECKED	APPROVED	DIMNS: mm / SCALE: NTS	TITLE: BOTTOM HONEY COMB BRACKET	
DATE 19.08.17	DATE	DATE	DRG. NUMBER: DPD 36 109 0 126	SIZE: A3	ISSUE: 1
KERALA STATE ELECTRONICS DEVELOPMENT CORPORATION LIMITED				NO.OF SHEETS: 1 / 1	

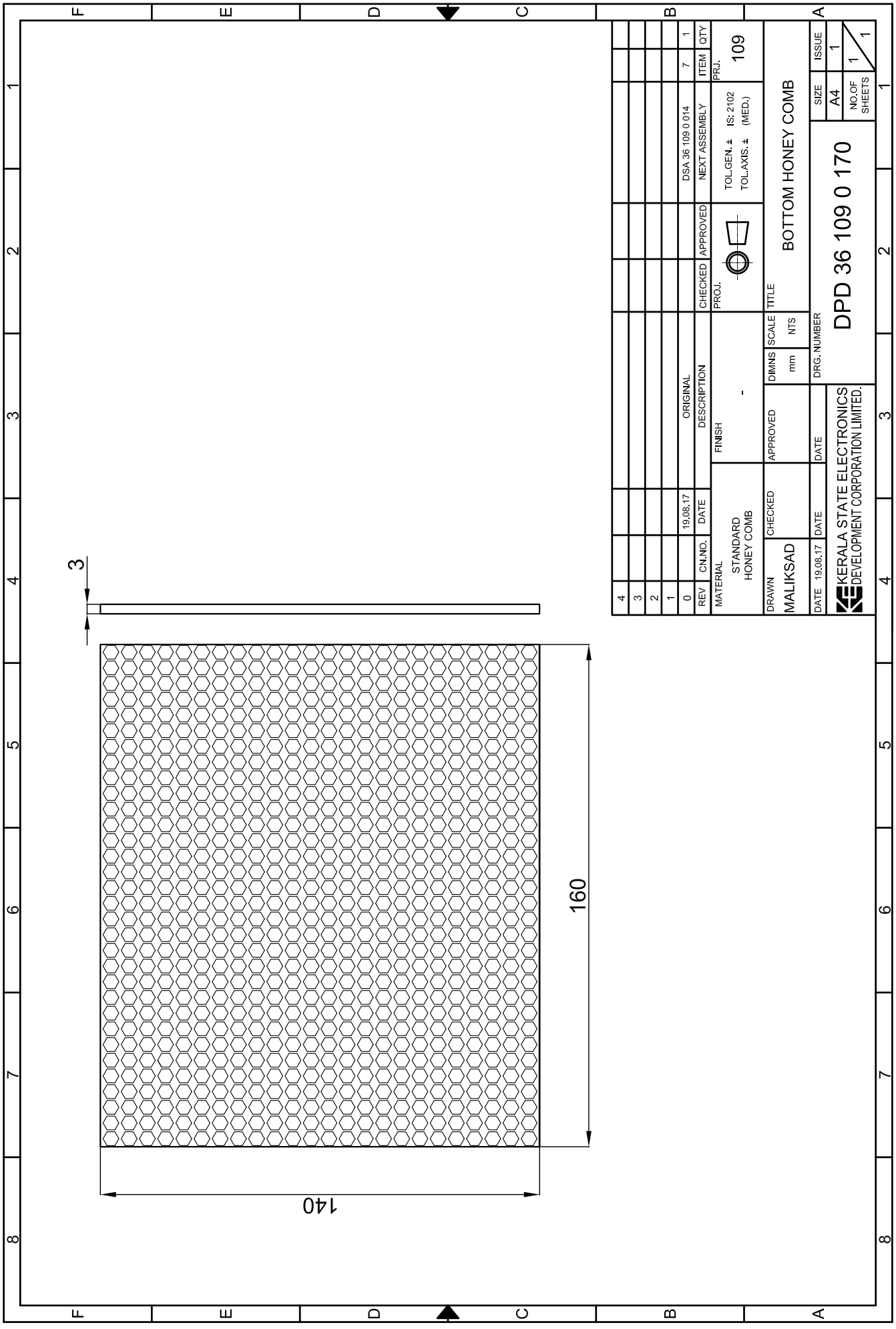
3
160
140
4
3
2
1
0
REV
CN.NO.
DATE
19.08.17
ORIGINAL
DESCRIPTION
CHECKED
APPROVED
DSA 36 109 0 014
7
ITEM
NEXT ASSEMBLY
QTY
1
PRJ.
109
TOL.GEN. ± IS: 2102
TOL.AXIS. ± (MED.)
PROJ.
MATERIAL
STANDARD
HONEY COMB
FINISH
-
TITLE
BOTTOM HONEY COMB
DRAWN
MALIKSAD
DATE 19.08.17
CHECKED
DATE
APPROVED
DATE
DIMNS
mm
SCALE
NTS
DRG. NUMBER
DPD 36 109 0 170
SIZE
A4
ISSUE
1
NO.OF SHEETS
1
1
KERALA STATE ELECTRONICS
DEVELOPMENT CORPORATION LIMITED.

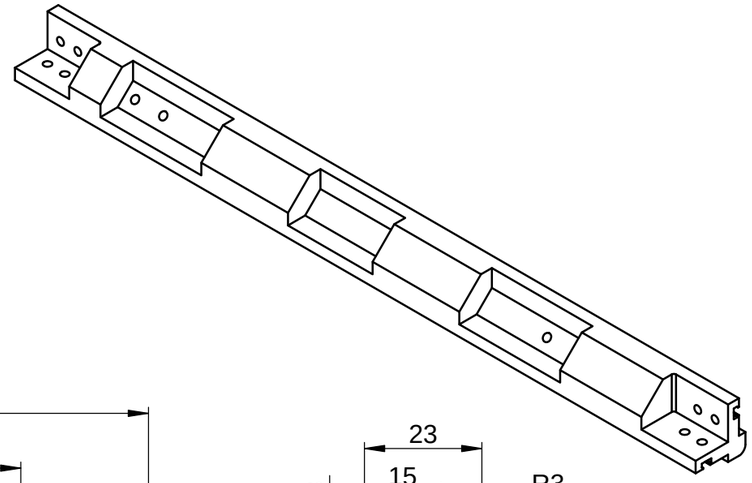

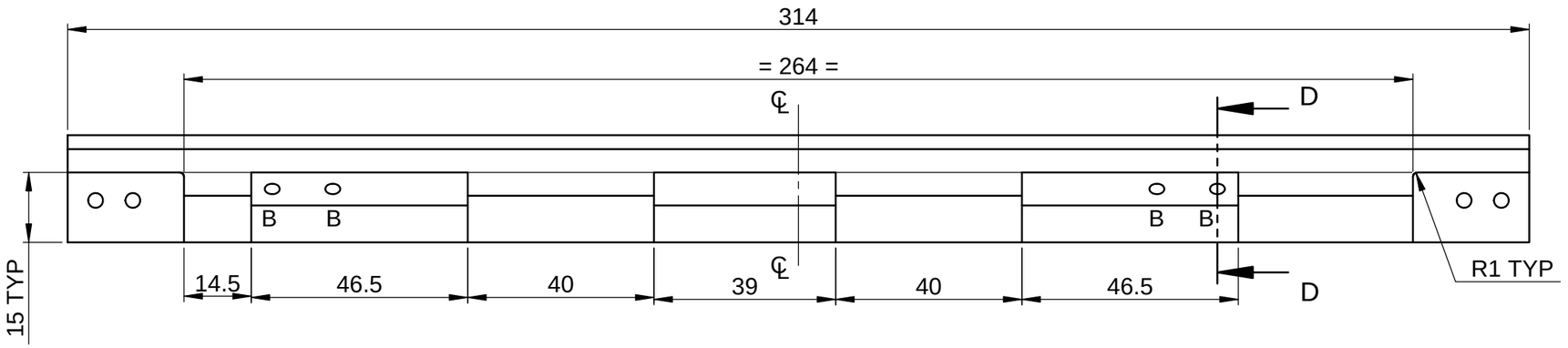

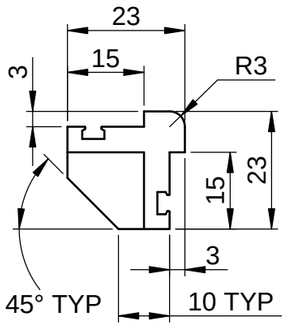

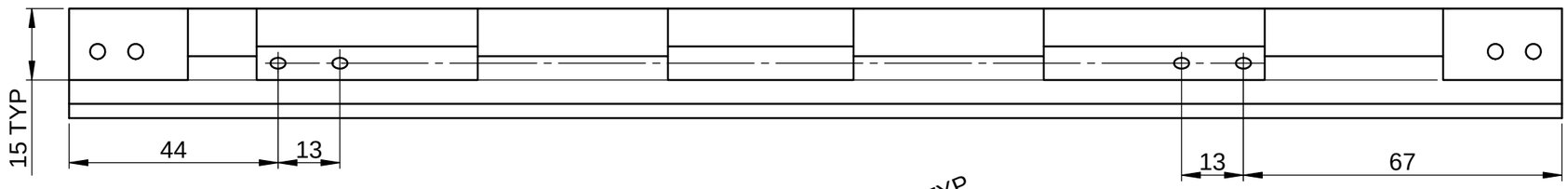

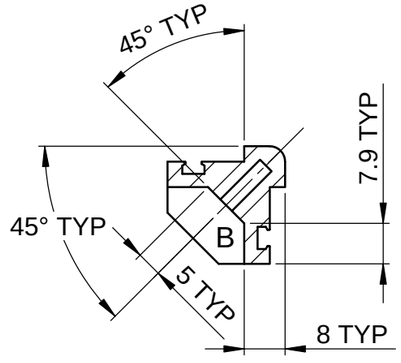

SECTION D-D

NOTE

1. AVOID SHARP CORNERS AND EDGES
2. ALL BURRS MUST BE REMOVED

SL NO	REF	DESCRIPTION	QTY
1	A	DRILL ⌀3.2 ⌴ ⌀6.2, ↧2.4	8
2	B	DRILL ⌀3.1, ↧10 AND M3 HELICOIL TAP	4
3	C	DRILL ⌀4.1, ↧10 AND M4 HELICOIL TAP	7

REV	CN.NO.	DATE	DESCRIPTION	CHECKED	APPROVED	NEXT ASSEMBLY	ITEM	QTY
4								
3								
2								
1								
0		19.08.17	ORIGINAL			DSA 36 109 0 020	13	1

MATERIAL: ALUMINIUM HE-30	FINISH: YELLOW CC COATING	PROJ.	TOL.GEN. ± IS:2102 TOL.AXIS. ± (MED)	PRJ. 109	
DRAWN: MALIKSAD	CHECKED	APPROVED	DIMNS: mm	SCALE: NTS	TITLE: BOTTOM LEFT DEPTH FRAME
DATE 19.08.17	DATE	DATE	DRG. NUMBER: DPD 36 109 0 099	SIZE: A3	ISSUE: 1
KERALA STATE ELECTRONICS DEVELOPMENT CORPORATION LIMITED.				NO.OF SHEETS: 1/2	

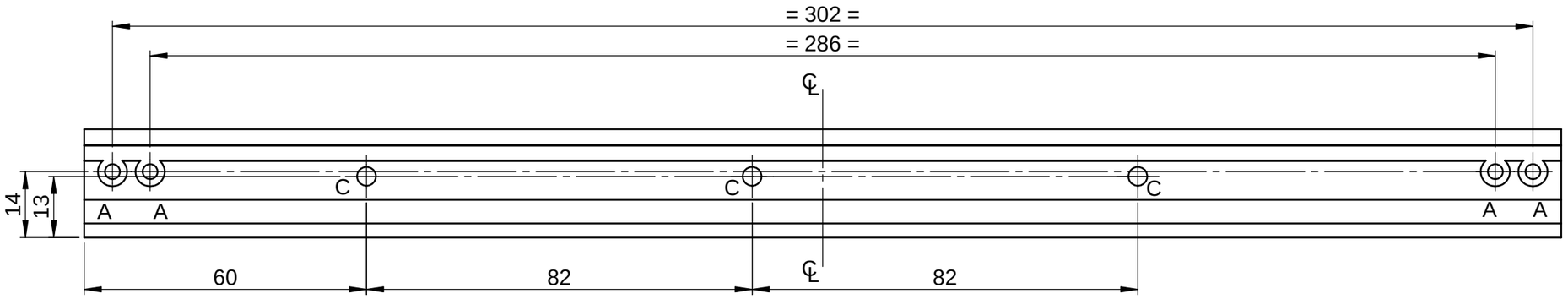

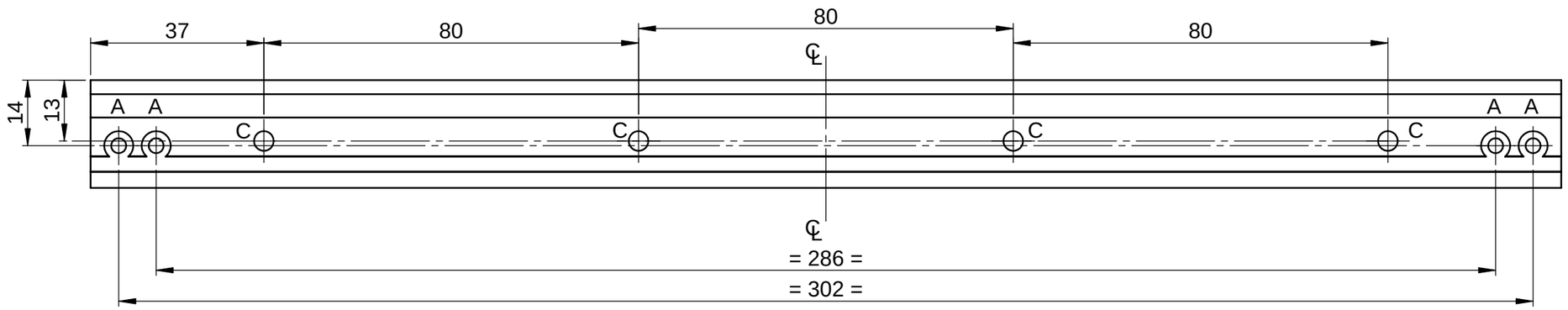

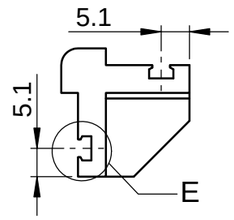

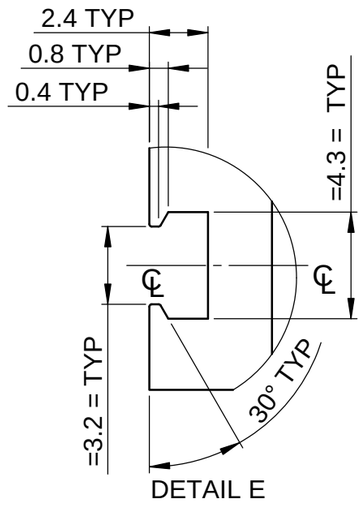

REV	CN.NO.	DATE	DESCRIPTION	CHECKED	APPROVED	NEXT ASSEMBLY	ITEM	QTY
4								
3								
2								
1								
0		19.08.17	ORIGINAL			DSA 36 109 0 020	13	1

MATERIAL: ALUMINIUM HE-30	FINISH: YELLOW CC COATING	PROJ.	TOL.GEN. ± IS:2102 TOL.AXIS. ± (MED)	PRJ. 109	
DRAWN: MALIKSAD	CHECKED	APPROVED	DIMNS: mm / SCALE: NTS	TITLE: BOTTOM LEFT DEPTH FRAME	
DATE 19.08.17	DATE	DATE			
KERALA STATE ELECTRONICS DEVELOPMENT CORPORATION LIMITED.			DRG. NUMBER: DPD 36 109 0 099	SIZE: A3	ISSUE: 1
				NO.OF SHEETS: 2 / 2	

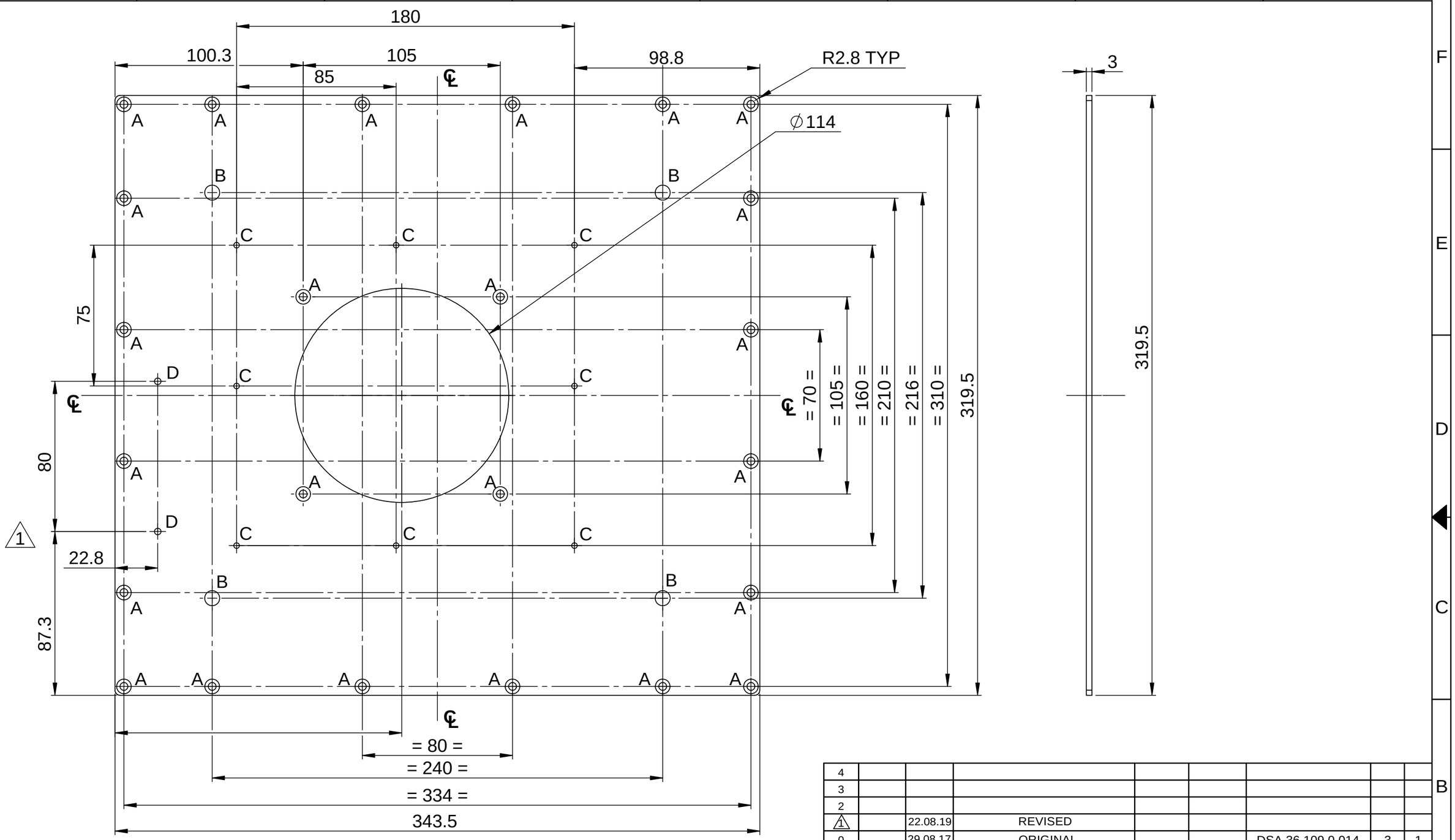

SLNO	REF	DESCRIPTION	QTY
1	A	∅4.2 ⌵ ∅7.8	24
2	B	∅8	4
3	C	∅3	8
4	D	∅3.5	2

REV	CN.NO.	DATE	DESCRIPTION	CHECKED	APPROVED	NEXT ASSEMBLY	ITEM	QTY
4								
3								
2								
1		22.08.19	REVISED					
0		29.08.17	ORIGINAL			DSA 36 109 0 014	3	1

MATERIAL: ALUMINIUM HE-30	FINISH: YELLOW CC COATING	PROJ.	TOL.GEN. ± IS:2102 TOL.AXIS. ± (MED)	PRJ. 109	
DRAWN: MALIKSAD	CHECKED	APPROVED	DIMNS: mm	SCALE: NTS	TITLE: BOTTOM PLATE
DATE 22.08.19	DATE	DATE	DRG. NUMBER: DPD 36 109 0 127	SIZE: A3	ISSUE: 1
KERALA STATE ELECTRONICS DEVELOPMENT CORPORATION LIMITED.				NO.OF SHEETS: 1 / 2	

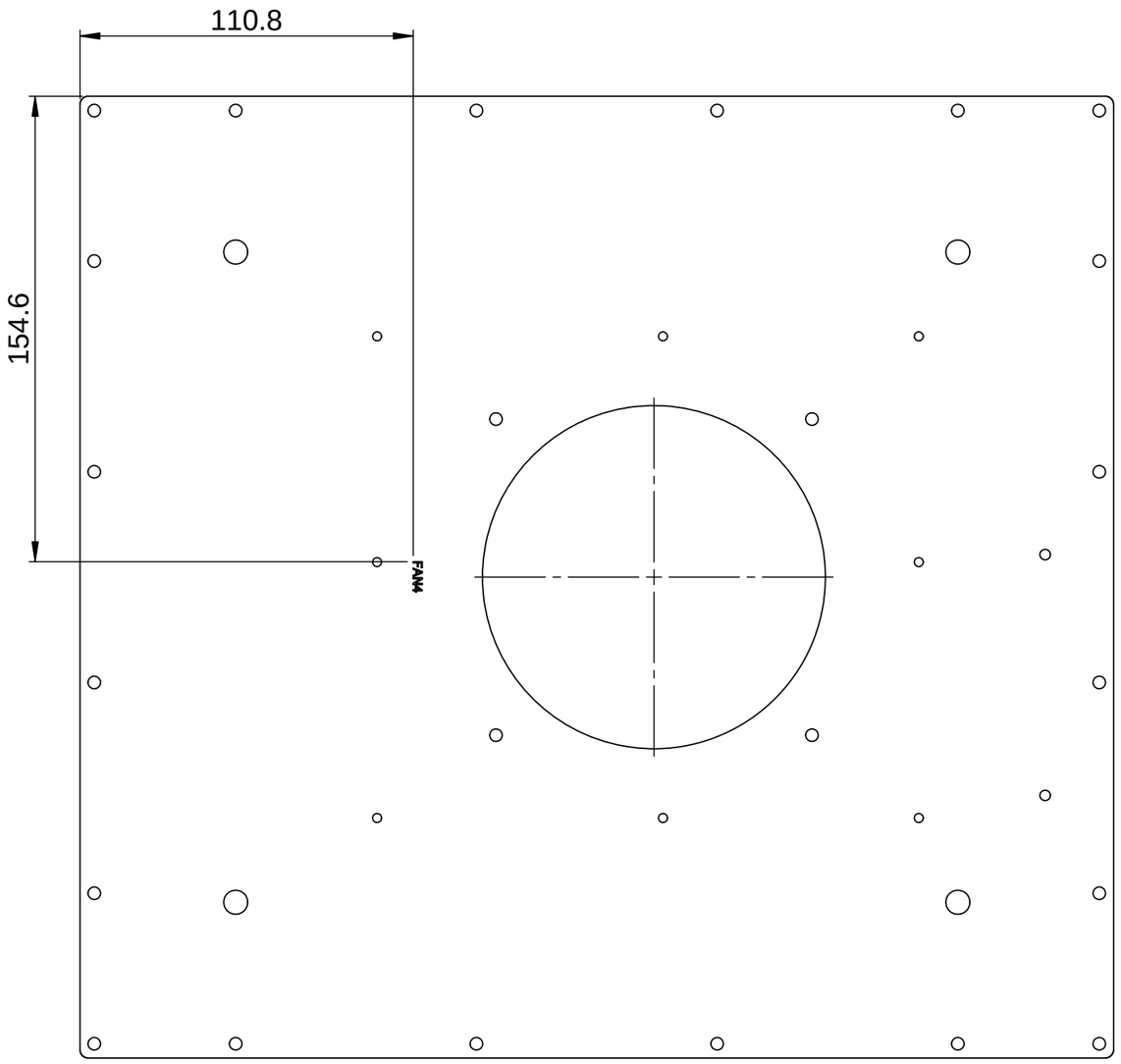

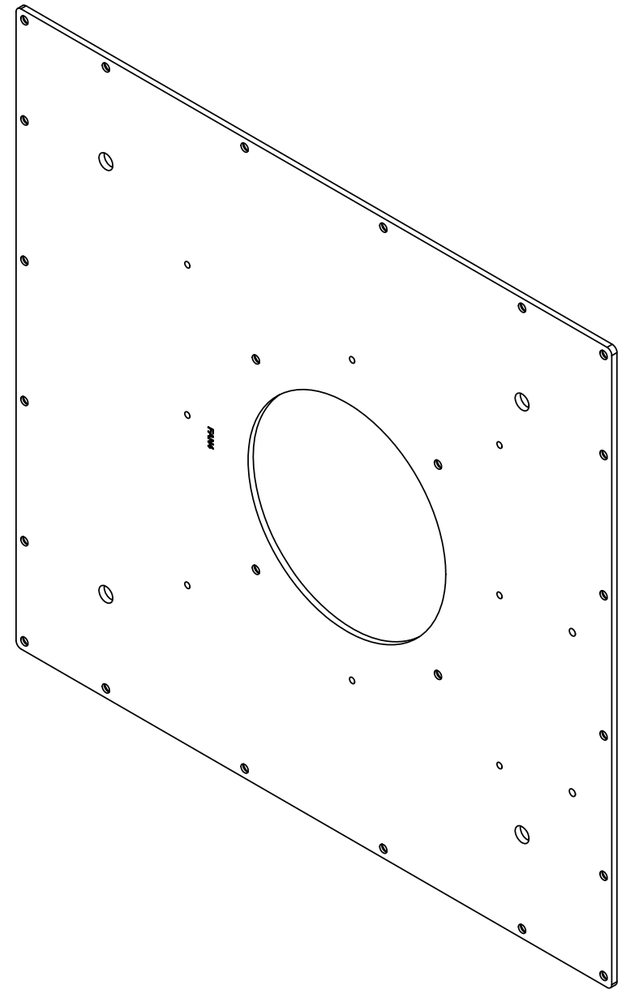

NOTE:

1. AVOID SHARP EDGES AND CORNERS
2. 3x0.5⇩ TEXT TO BE ENGRAVED AND FILLED WITH BLACK PAINT

REV	CN.NO.	DATE	DESCRIPTION	CHECKED	APPROVED	NEXT ASSEMBLY	ITEM	QTY
4								
3								
2								
1		22.08.19	REVISED					
0		29.08.17	ORIGINAL			DSA 36 109 0 014	3	1

MATERIAL	FINISH	PROJ.		PRJ.
ALUMINIUM HE-30	YELLOW CC COATING		TOL.GEN. ± IS:2102 TOL.AXIS. ± (MED)	109

DRAWN	CHECKED	APPROVED	DIMNS	SCALE	TITLE
MALIKSAD			mm	NTS	BOTTOM PLATE

DATE	DATE	DATE	DRG. NUMBER	SIZE	ISSUE
22.08.19			DPD 36 109 0 127	A3	1
				NO.OF SHEETS	2 / 2

KERALA STATE ELECTRONICS DEVELOPMENT CORPORATION LIMITED.

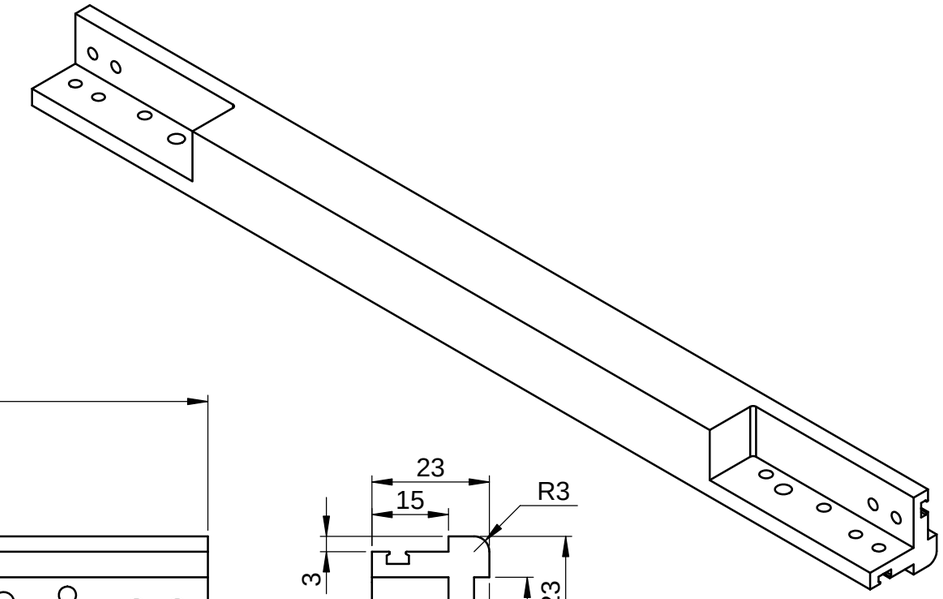

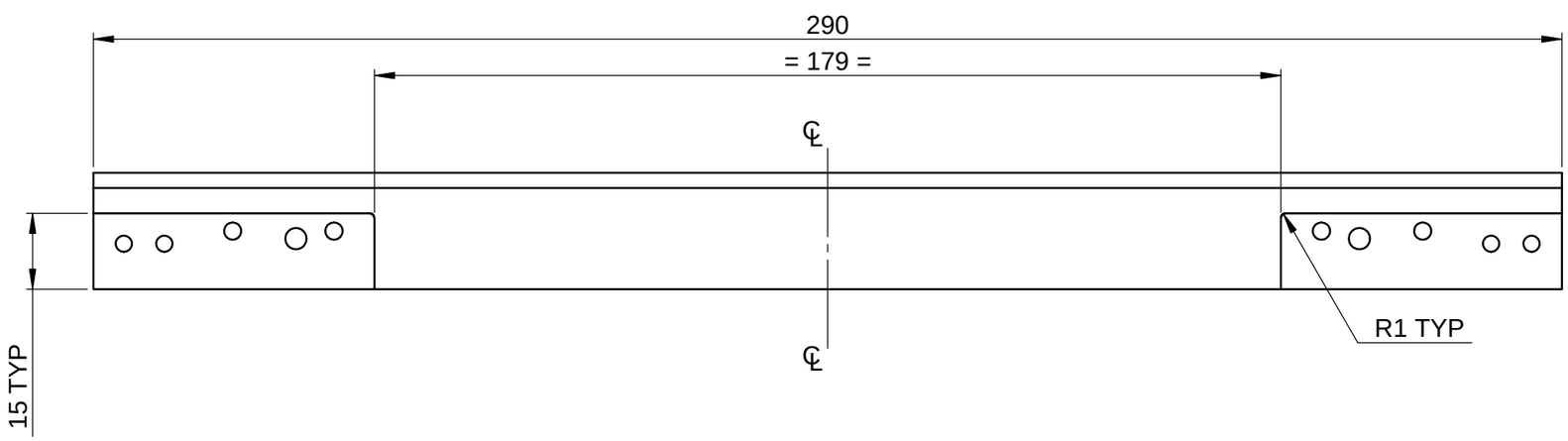

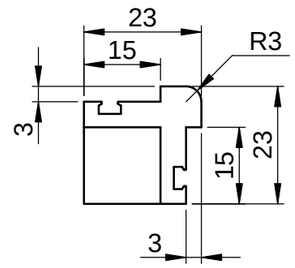

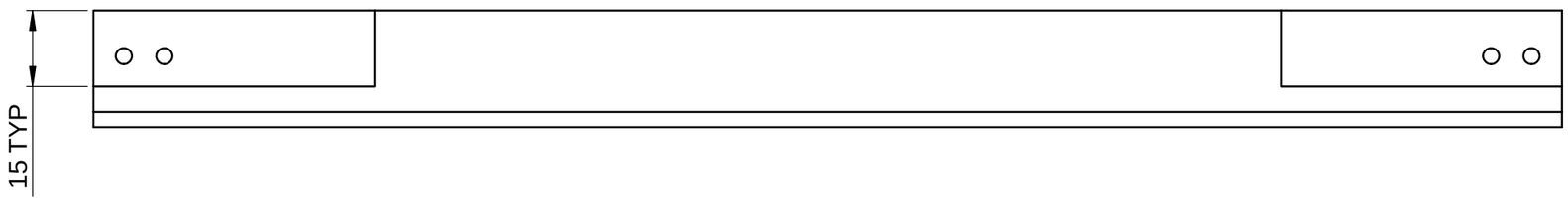

NOTE

1. AVOID SHARP CORNERS AND EDGES
2. ALL BURRS MUST BE REMOVED

SL NO	REF	DESCRIPTION	QTY
1	A	DRILL ∅3.2 ⌴ ∅6.2, ↧ 2.4	8
2	B	DRILL ∅3.2 ⌵ ∅ 6.3	4
3	C	DRILL ∅4.1 AND M4 HELICOIL TAP	2
4	D	DRILL ∅4.1, ↧15 AND M4 HELICOIL TAP	5

REV	CN.NO.	DATE	DESCRIPTION	CHECKED	APPROVED	NEXT ASSEMBLY	ITEM	QTY
4								
3								
2								
1								
0		19.08.17	ORIGINAL			DSA 36 109 0 020	22	1

MATERIAL: ALUMINIUM HE-30	FINISH: YELLOW CC COATING	PROJ.	TOL.GEN. ± IS:2102 TOL.AXIS. ± (MED)	PRJ. 109	
DRAWN: MALIKSAD	CHECKED	APPROVED	DIMNS: mm	SCALE: NTS	TITLE: BOTTOM REAR HT FRAME
DATE 19.08.17	DATE	DATE	DRG. NUMBER: DPD 36 109 0 173	SIZE: A3	ISSUE: 1
KERALA STATE ELECTRONICS DEVELOPMENT CORPORATION LIMITED.				NO.OF SHEETS: 1/2	

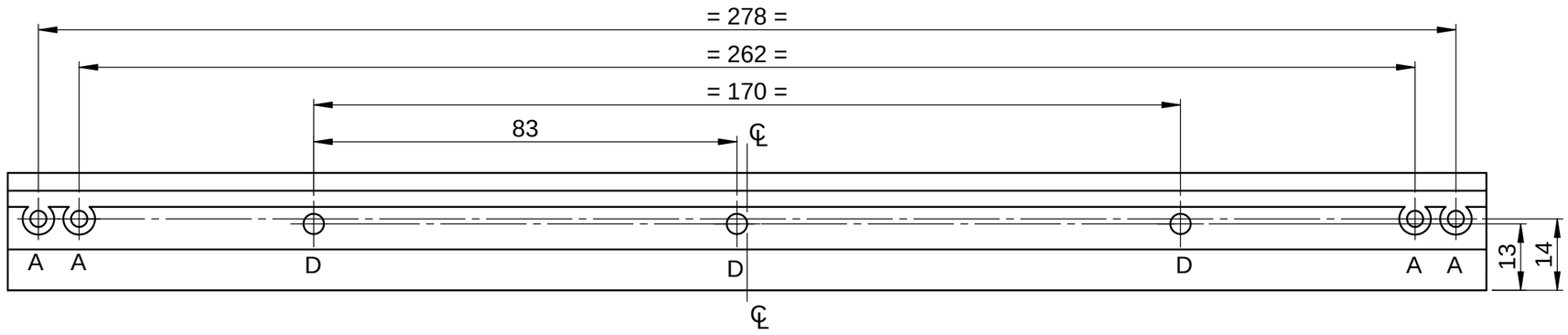

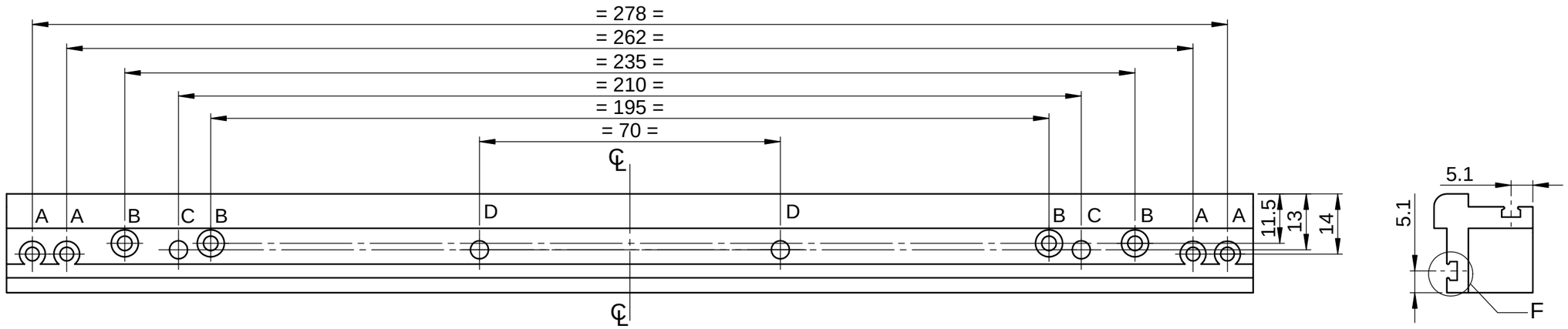

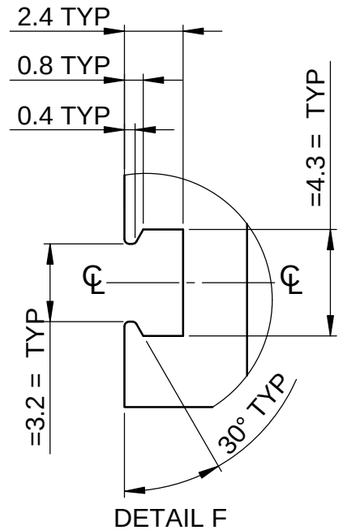

DETAIL F

REV	CN.NO.	DATE	DESCRIPTION	CHECKED	APPROVED	NEXT ASSEMBLY	ITEM	QTY
4								
3								
2								
1								
0		19.08.17	ORIGINAL			DSA 36 109 0 020	22	1

MATERIAL: ALUMINIUM HE-30	FINISH: YELLOW CC COATING	PROJ.	TOL.GEN. ± IS:2102 TOL.AXIS. ± (MED)	PRJ. 109		
DRAWN: MALIKSAD	CHECKED	APPROVED	DIMNS: mm	SCALE: NTS	TITLE: BOTTOM REAR HT FRAME	
DATE 19.08.17	DATE	DATE	DRG. NUMBER: DPD 36 109 0 173		SIZE: A3	ISSUE: 1
KERALA STATE ELECTRONICS DEVELOPMENT CORPORATION LIMITED.					NO.OF SHEETS: 2 / 2	

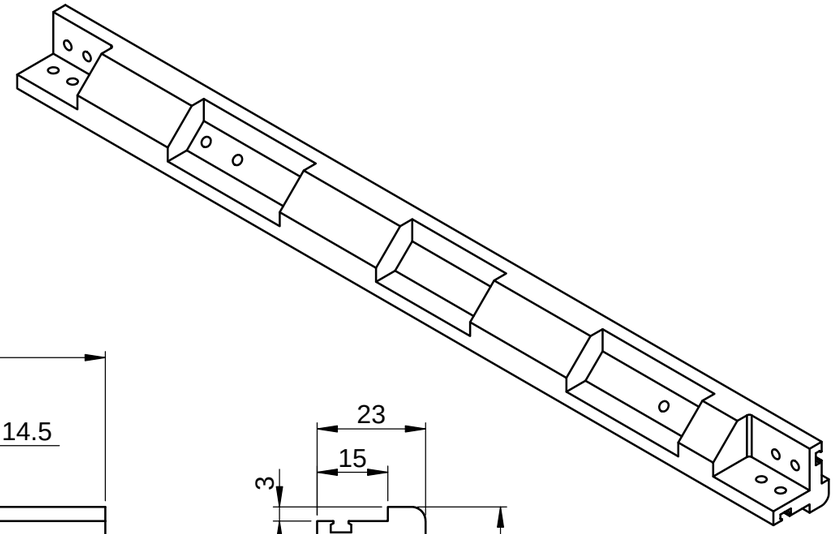

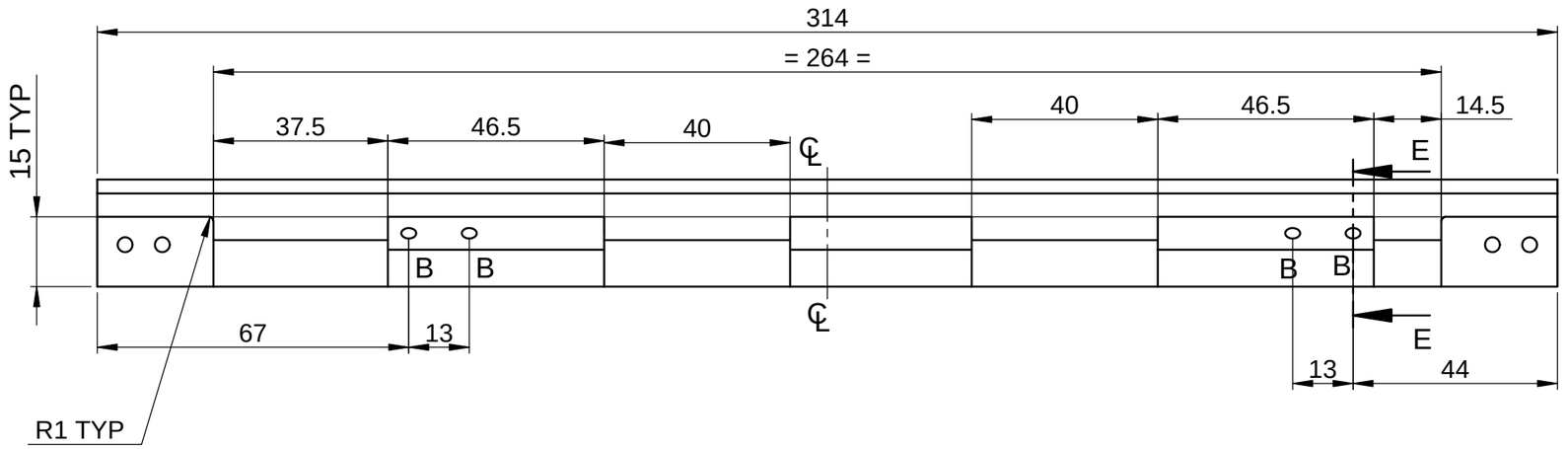

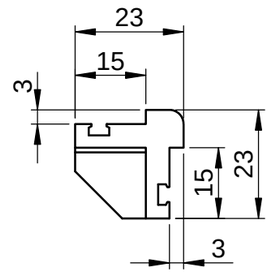

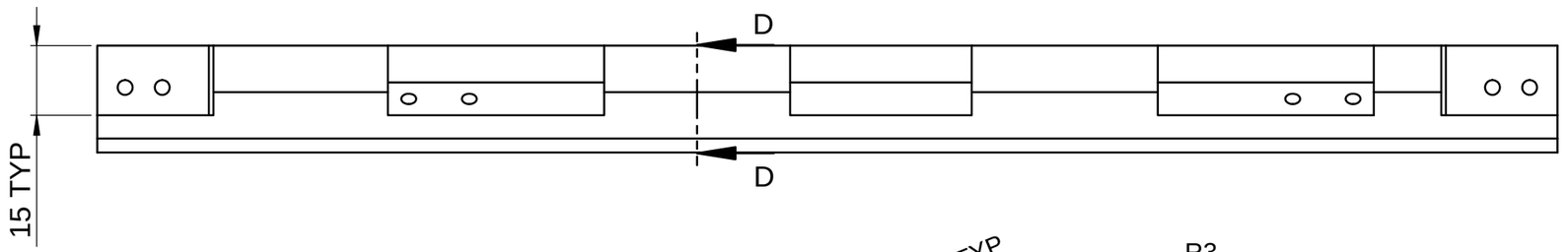

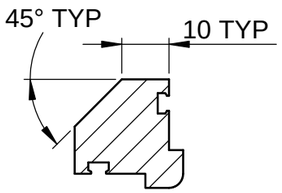

SECTION D-D

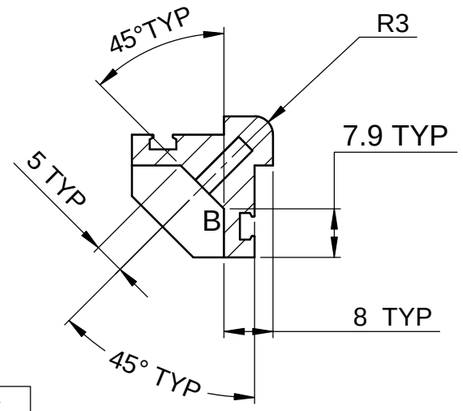

SECTION E-E

NOTE

1. AVOID SHARP CORNERS AND EDGES
2. ALL BURRS MUST BE REMOVED

SL NO	REF	DESCRIPTION	QTY
1	A	DRILL ⌀3.2 ⌴ ⌀6.2, ↧2.4	8
2	B	DRILL ⌀3.1, ↧10 AND M3 HELICOIL TAP	4
3	C	DRILL ⌀4.1, ↧5 AND M4 HELICOIL TAP	7

REV	CN.NO.	DATE	DESCRIPTION	CHECKED	APPROVED	NEXT ASSEMBLY	ITEM	QTY
4								
3								
2								
1								
0		19.08.17	ORIGINAL			DSA 36 109 0 020	11	1

MATERIAL: ALUMINIUM HE-30	FINISH: YELLOW CC COATING	PROJ.	TOL.GEN. ± IS:2102 TOL.AXIS. ± (MED)	PRJ. 109	
DRAWN: MALIKSAD	CHECKED	APPROVED	DIMNS: mm	SCALE: NTS	TITLE: BOTTOM RIGHT DEPTH FRAME
DATE 19.08.17	DATE	DATE	DRG. NUMBER: DPD 36 109 0 097	SIZE: A3	ISSUE: 1
KERALA STATE ELECTRONICS DEVELOPMENT CORPORATION LIMITED.				NO.OF SHEETS: 1/2	

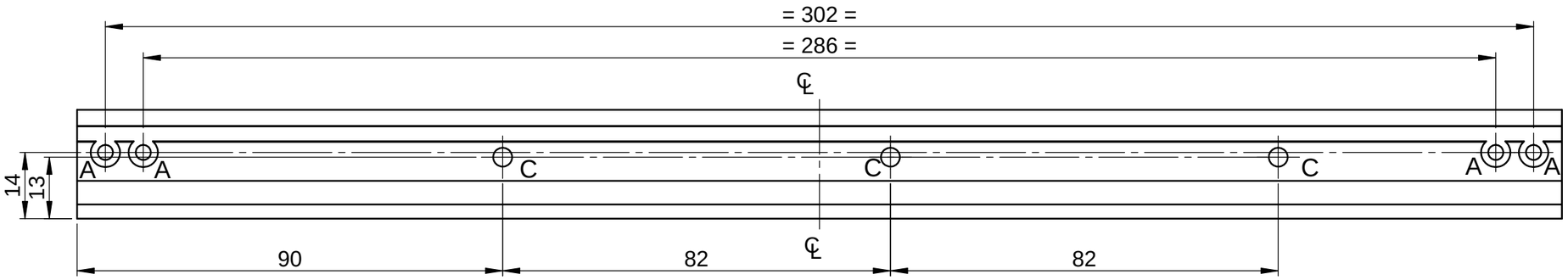

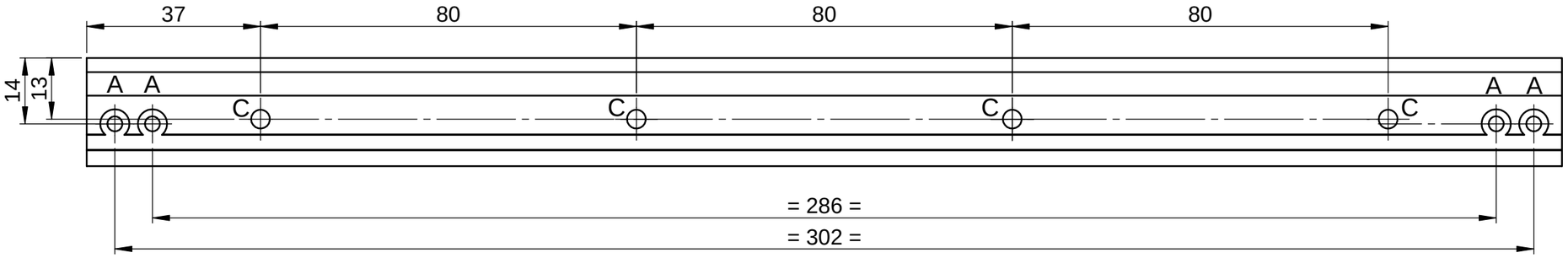

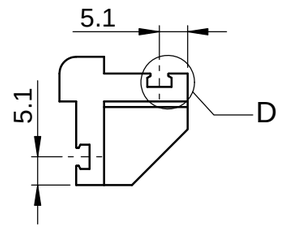

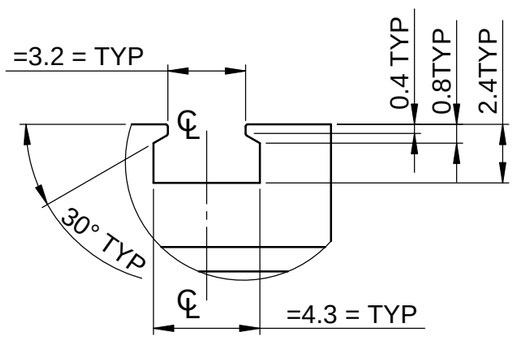

DETAIL D

REV	CN.NO.	DATE	DESCRIPTION	CHECKED	APPROVED	NEXT ASSEMBLY	ITEM	QTY
4								
3								
2								
1								
0		19.08.17	ORIGINAL			DSA 36 109 0 020	11	1

MATERIAL: ALUMINIUM HE-30	FINISH: YELLOW CC COATING	PROJ.	TOL.GEN. ± IS:2102 TOL.AXIS. ± (MED)	PRJ. 109	
DRAWN: MALIKSAD	CHECKED	APPROVED	DIMNS: mm / SCALE: NTS	TITLE: BOTTOM RIGHT DEPTH FRAME	
DATE 19.08.17	DATE	DATE			

KERALA STATE ELECTRONICS DEVELOPMENT CORPORATION LIMITED.

DRG. NUMBER: DPD 36 109 0 097

SIZE	ISSUE
A3	1
NO.OF SHEETS	2 / 2

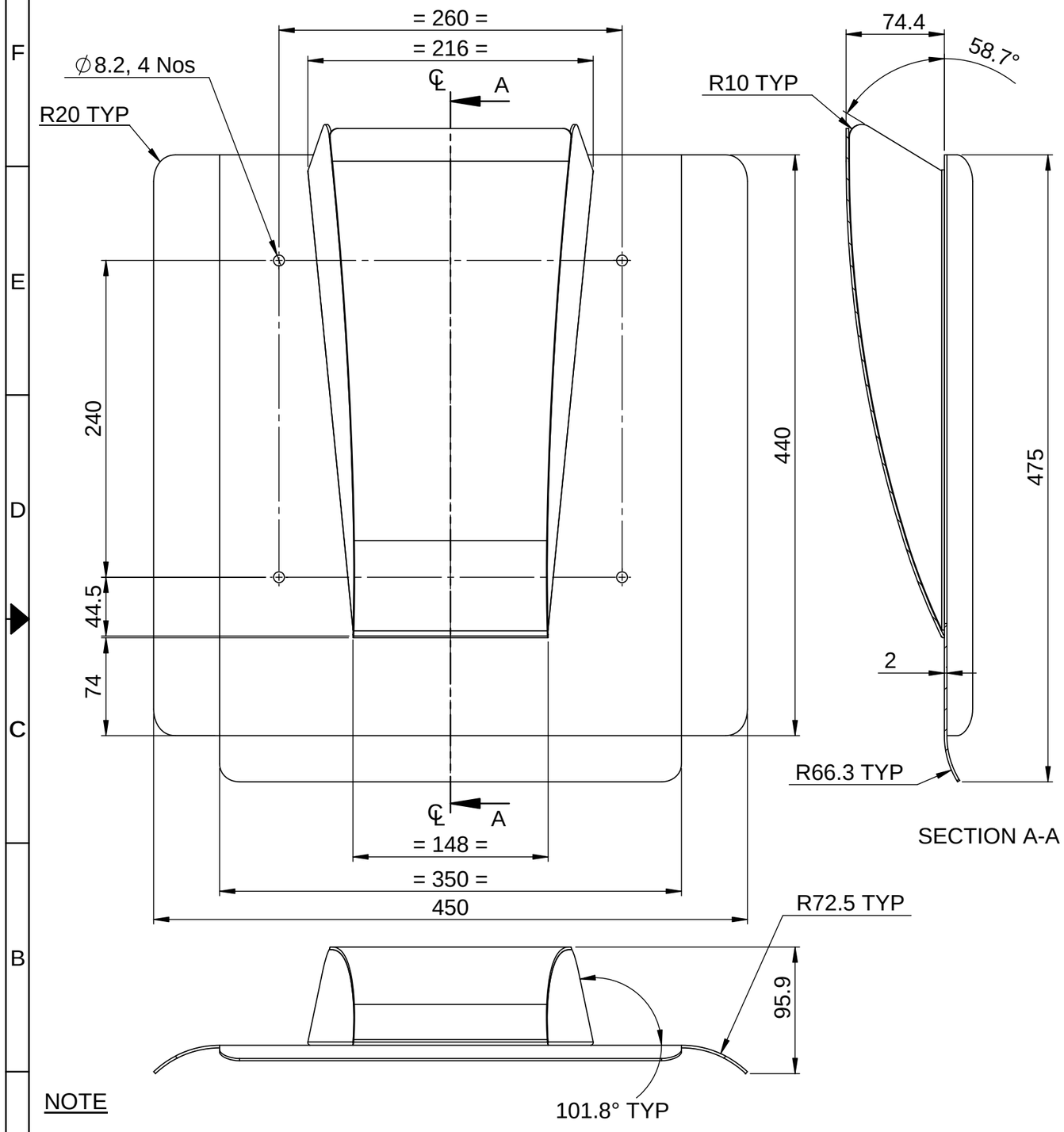

SECTION A-A

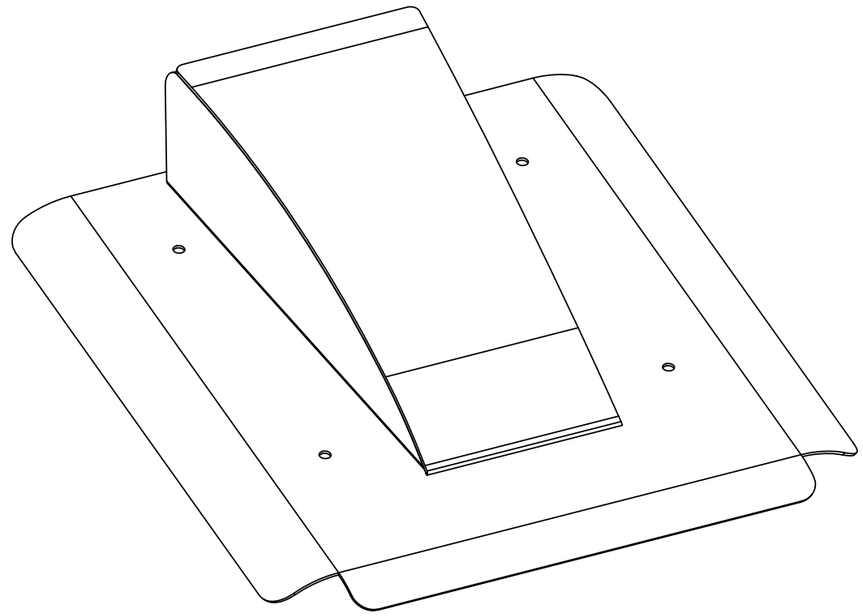

NOTE

1. AVOID SHARP CORNERS AND EDGES
2. ALL BURRS MUST BE REMOVED
3. DIMENSIONLESS FEATURES TO BE MEASURED FROM IGS FILE
4. ALL JOINTS TO BE WELDED AND ROUND SMOOTH

REV	CN.NO.	DATE	DESCRIPTION	CHECKED	APPROVED	NEXT ASSEMBLY	ITEM	QTY
4								
3								
2								
1								
0		19.08.16	ORIGINAL			DSA 36 109 0 018	1	1

MATERIAL: ALUMINIUM H32-5052	FINISH: YELLOW CC COATING	PROJ.	TOL.GEN. ± IS:2102 TOL.AXIS. ± (MED)	PRJ. 109	
DRAWN: MALIKSAD	CHECKED	APPROVED	DIMNS: mm	SCALE: NTS	TITLE: CANOPY COVER
DATE 19.08.16	DATE	DATE	DRG. NUMBER: DPD 36 109 0 072	SIZE: A3	ISSUE: 1
KERALA STATE ELECTRONICS DEVELOPMENT CORPORATION LIMITED.				NO.OF SHEETS: 1 / 1	

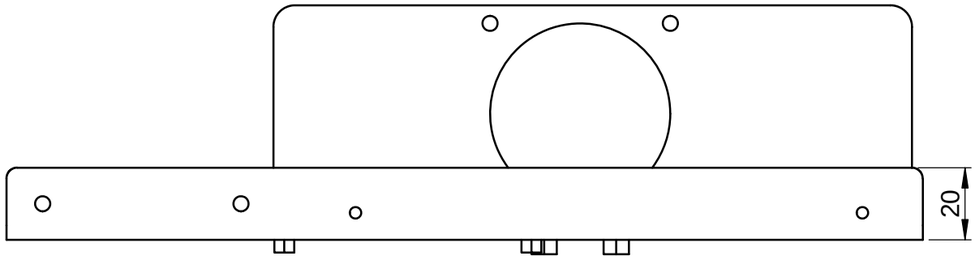

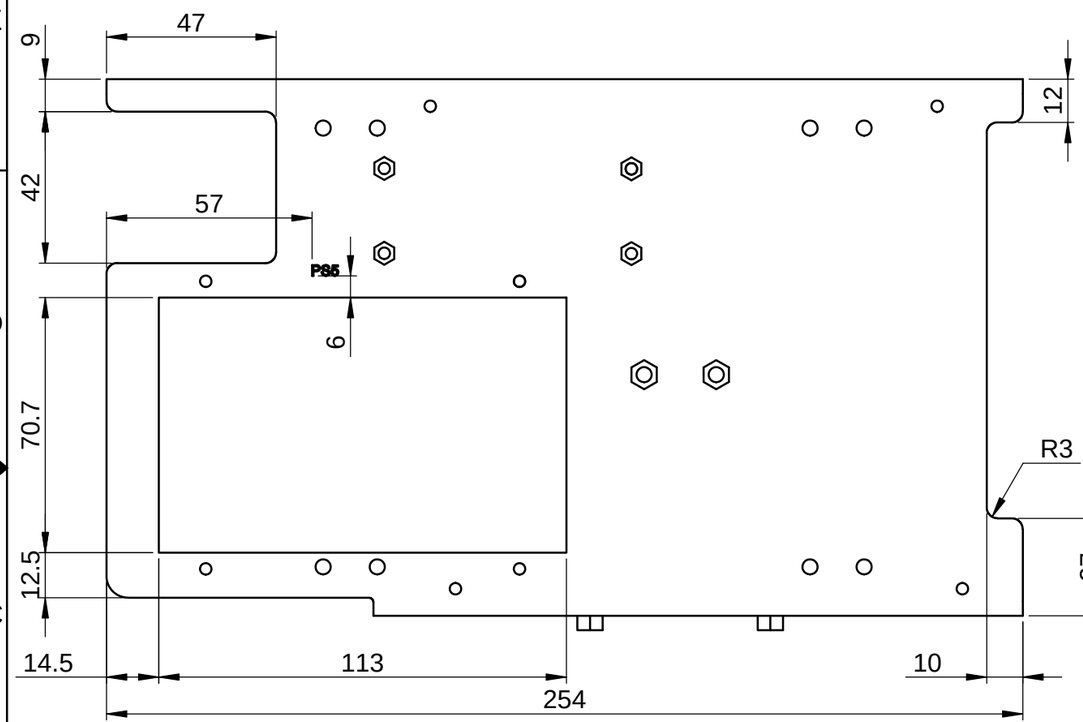

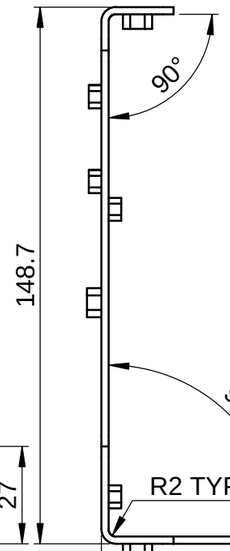

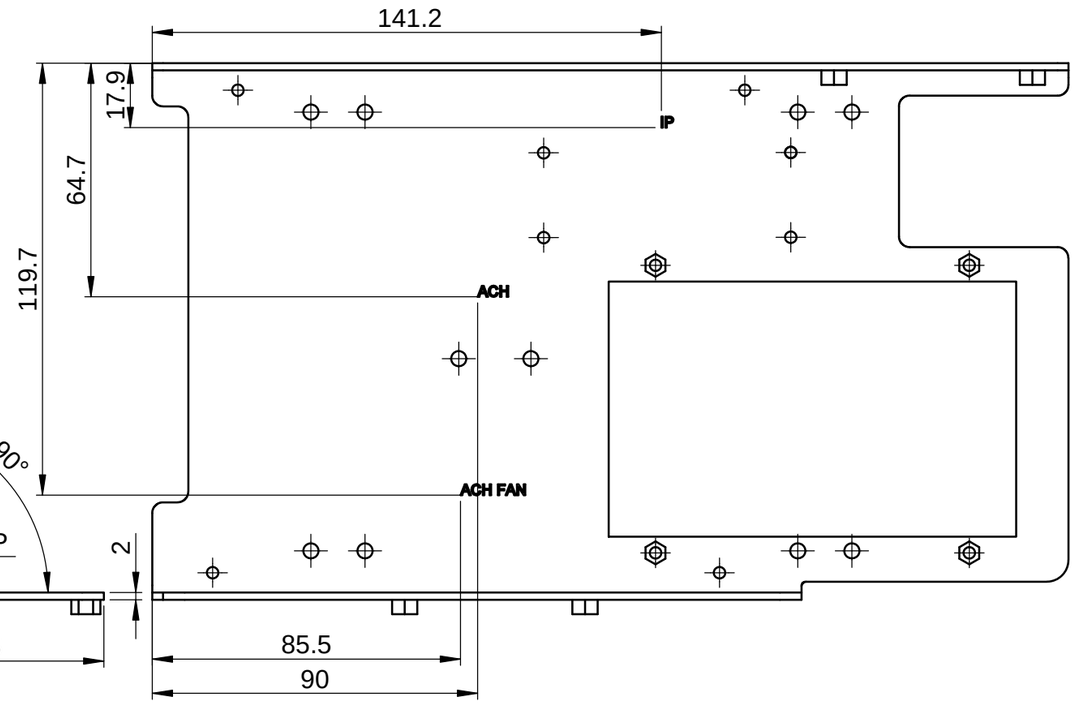

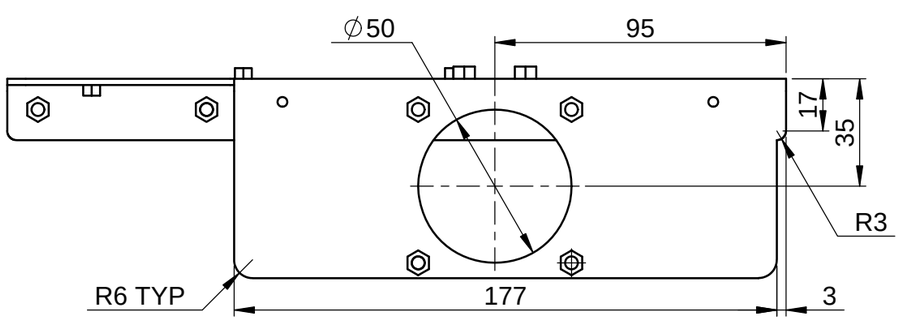

REV	CN.NO.	DATE	DESCRIPTION	CHECKED	APPROVED	NEXT ASSEMBLY	ITEM	QTY
4								
3								
2								
1								
0		19.08.17	ORIGINAL			DSA 36 109 0 012	3	1

MATERIAL: 2 mm SS 316 SHEET	FINISH: --	PROJ.	TOL.GEN. ± IS:2102 TOL.AXIS. ± (MED)	PRJ. 109	
DRAWN: MALIKSAD	CHECKED	APPROVED	DIMNS: mm	SCALE: NTS	TITLE: CARD CAGE LEFT SHEET
DATE 19.08.17	DATE	DATE	DRG. NUMBER: DPD 36 109 0 033	SIZE: A3	ISSUE: 1
KERALA STATE ELECTRONICS DEVELOPMENT CORPORATION LIMITED.				NO.OF SHEETS: 1 / 2	

SL NO	REF	DESCRIPTION	QTY
1	A	∅4.2	8
2	B	M4 RIVET NUT	8
3	C	∅3.2	8
4	D	M3 RIVET NUT	8

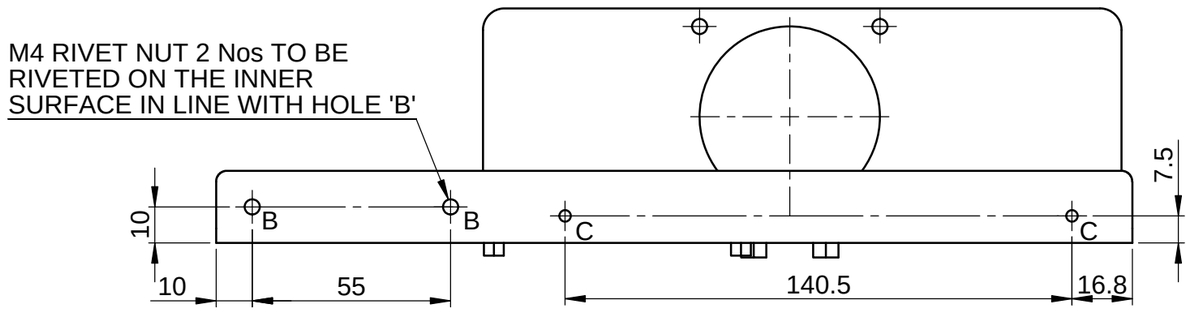

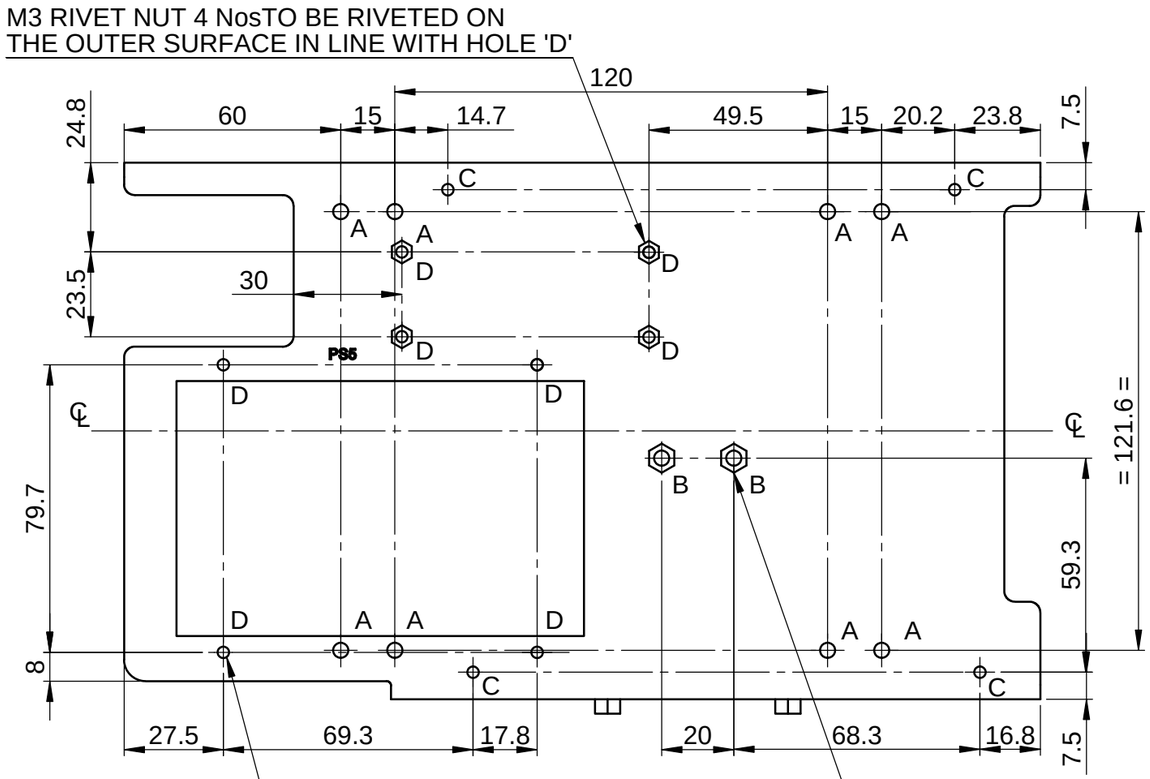

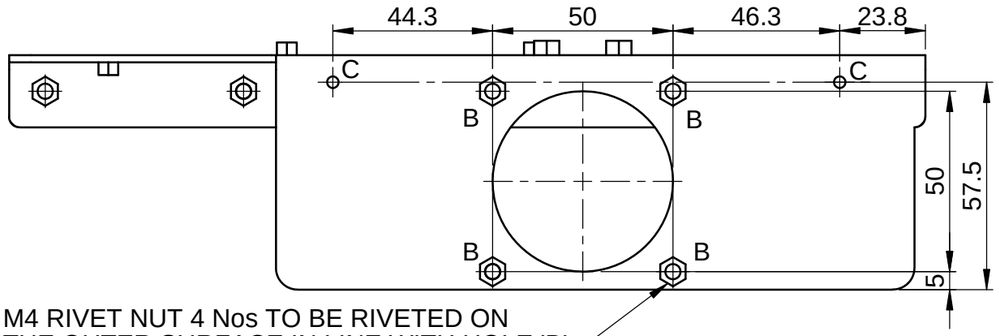

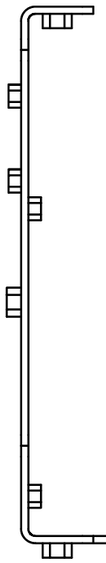

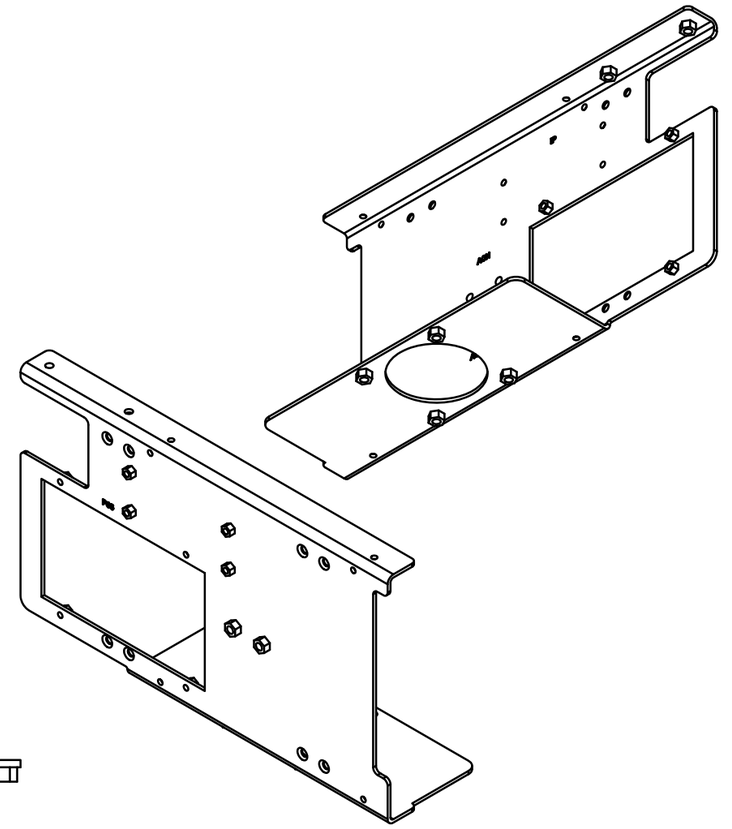

NOTE

1. AVOID SHARP CORNERS AND EDGES
2. 3x0.5↓ TEXT TO BE ENGRAVED AND FILLED WITH BLACK PAINT

REV	CN.NO.	DATE	DESCRIPTION	CHECKED	APPROVED	NEXT ASSEMBLY	ITEM	QTY
4								
3								
2								
1								
0		19.08.17	ORIGINAL			DSA 36 109 0 012	3	1

MATERIAL: 2 mm SS 316 SHEET	FINISH: --	PROJ.	TOL.GEN. ± IS:2102 TOL.AXIS. ± (MED)	PRJ. 109	
DRAWN: MALIKSAD	CHECKED	APPROVED	DIMNS: mm	SCALE: NTS	TITLE: CARD CAGE LEFT SHEET
DATE 19.08.17	DATE	DATE	DRG. NUMBER: DPD 36 109 0 033	SIZE: A3	ISSUE: 1
KERALA STATE ELECTRONICS DEVELOPMENT CORPORATION LIMITED				NO.OF SHEETS: 2 / 2	

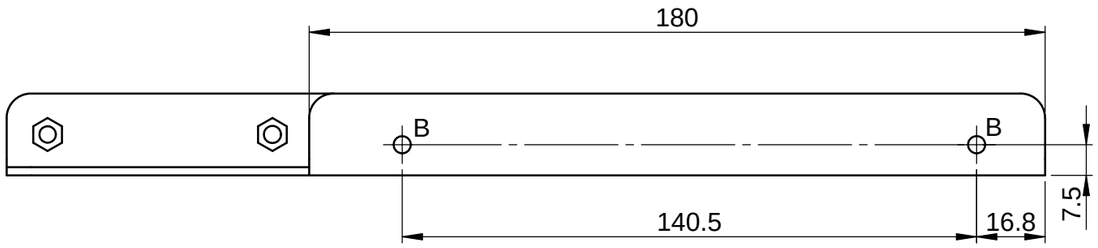

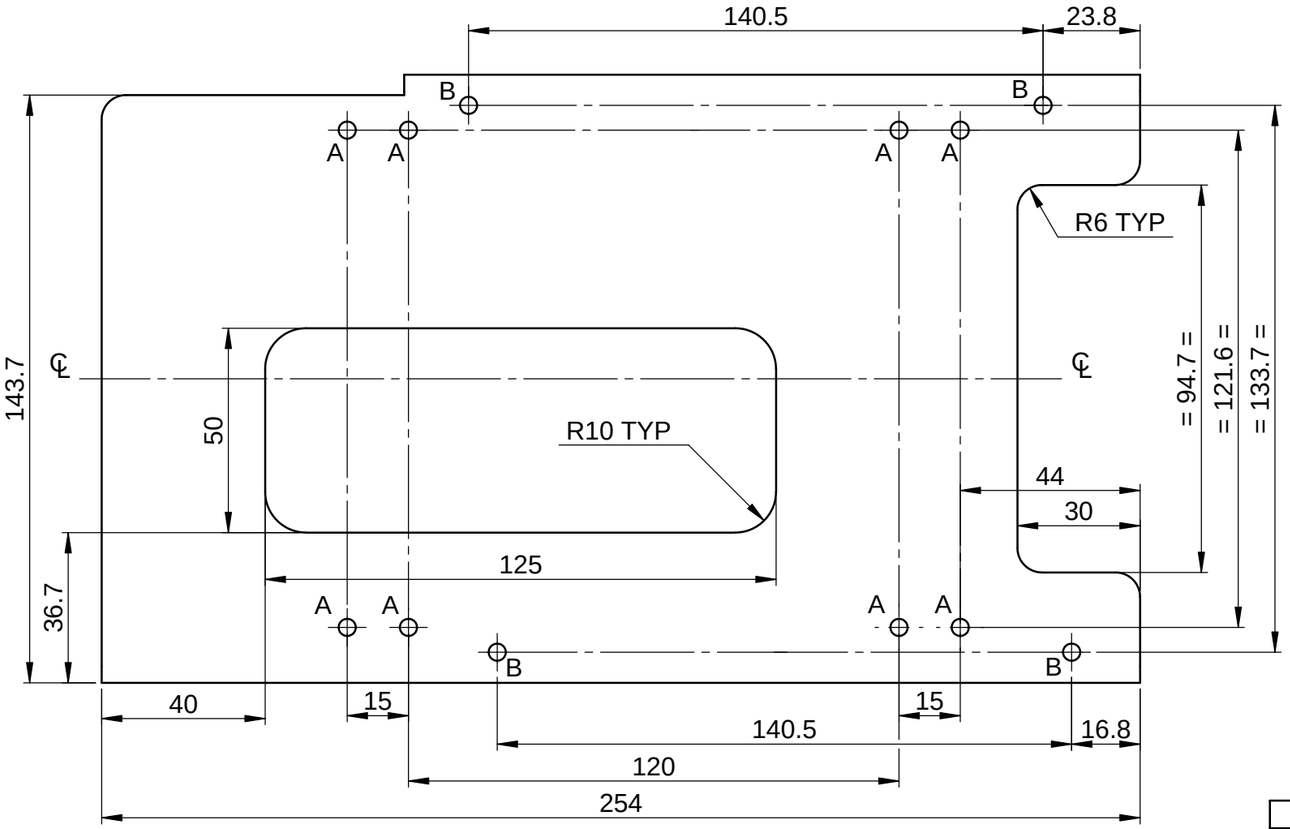

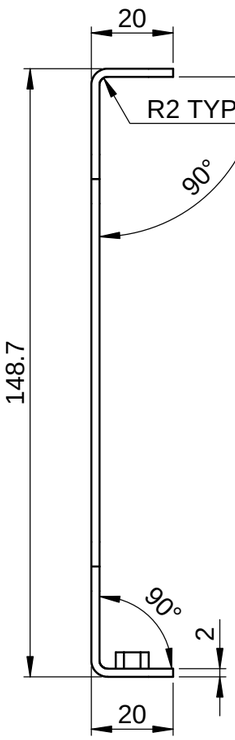

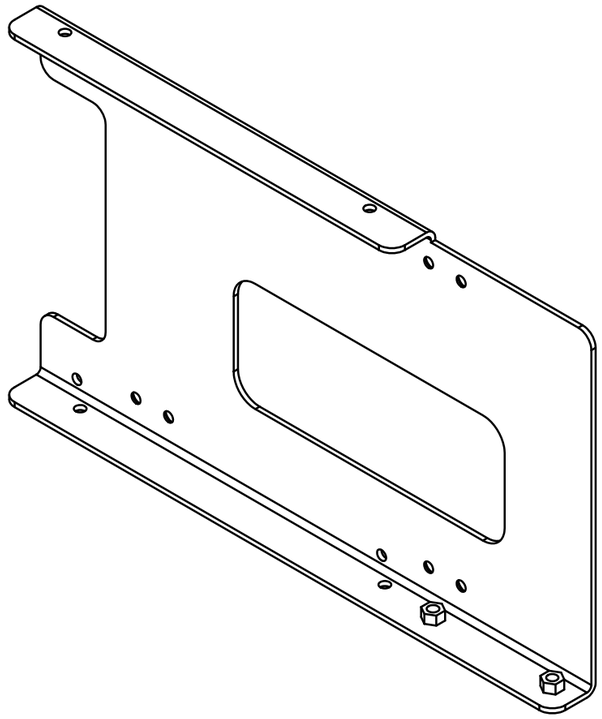

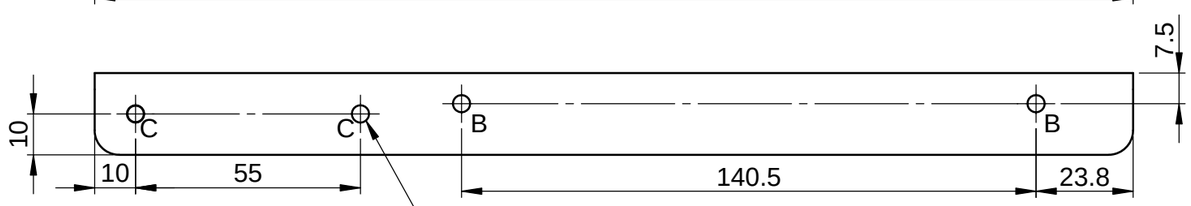

NOTE:-

1. AVOID SHARP EDGES AND CORNERS
2. ALL BURRS MUST BE REMOVED

SL NO	REF	DESCRIPTION	QTY
1	A	∅4.2	8
2	B	∅3.2	8
3	C	M4 RIVET NUT	2

REV	CN.NO.	DATE	DESCRIPTION	CHECKED	APPROVED	NEXT ASSEMBLY	ITEM	QTY
4								
3								
2								
1								
0		11.10.17	ORIGINAL			DSA 36 109 0 012	16	1

MATERIAL: 2mm SS 316 SHEET	FINISH: --	PROJ.	TOL.GEN. ± IS:2102 TOL.AXIS. ± (MED)	PRJ. 109	
DRAWN: MALIKSAD	CHECKED	APPROVED	DIMNS: mm	SCALE: NTS	TITLE: CARD CAGE RIGHT PLATE
DATE 11.10.17	DATE	DATE	DRG. NUMBER: DPD 36 109 0 129	SIZE: A3	ISSUE: 1
KERALA STATE ELECTRONICS DEVELOPMENT CORPORATION LIMITED				NO.OF SHEETS: 1/1	

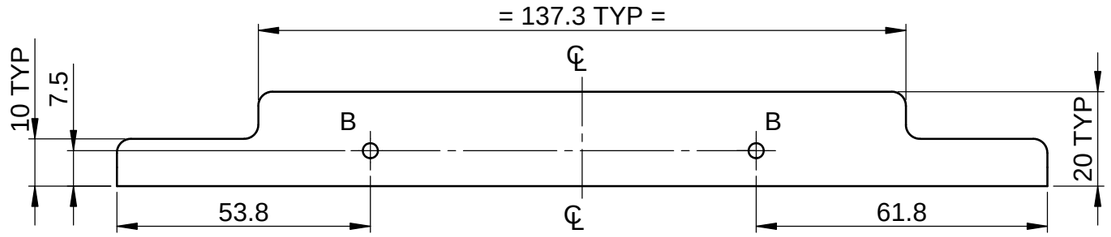

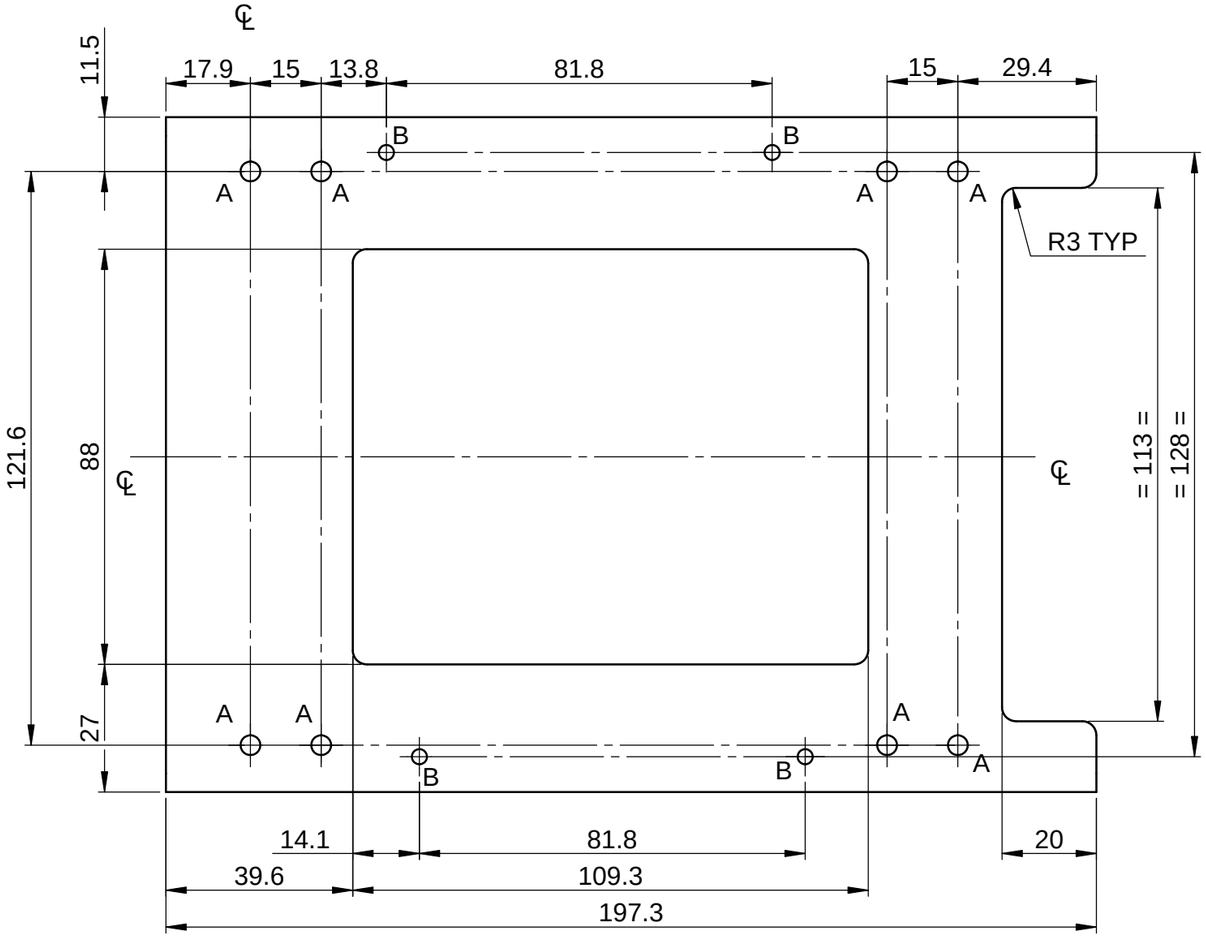

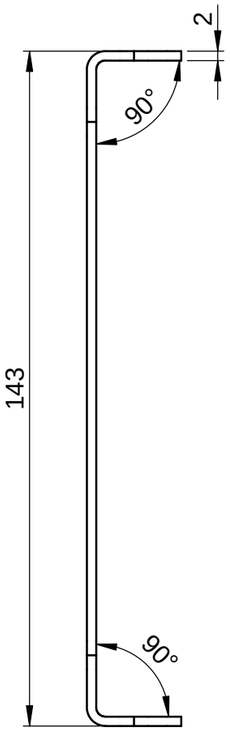

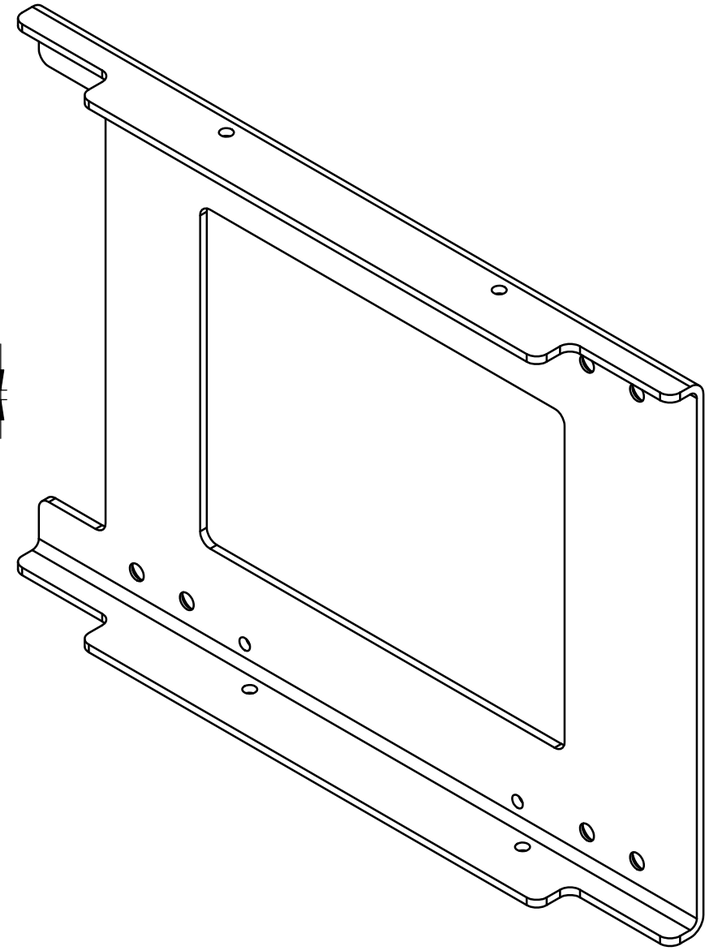

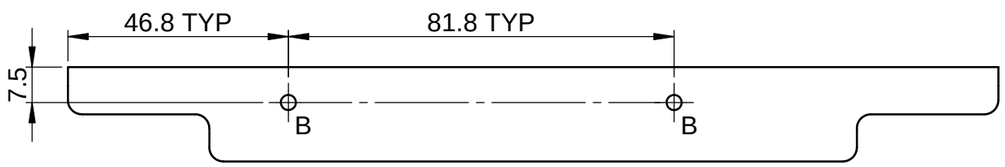

NOTE

1. AVOID SHARP CORNERS AND EDGES
2. ALL BURRS MUST BE REMOVED

SL NO	REF	DESCRIPTION	QTY
1	A	∅4.2	8
2	B	∅3.2	8

REV	CN.NO.	DATE	DESCRIPTION	CHECKED	APPROVED	NEXT ASSEMBLY	ITEM	QTY
4								
3								
2								
1								
0		19.08.17	ORIGINAL			DSA 36 102 0 018	3	1

MATERIAL: 2mm SS 316 SHEET	FINISH: --	PROJ.	TOL.GEN. ± IS:2102 TOL.AXIS. ± (MED)	PRJ. 109	
DRAWN: MALIKSAD	CHECKED	APPROVED	DIMNS: mm	SCALE: NTS	TITLE: CARD GUIDE LEFT SHEET
DATE 19.08.17	DATE	DATE	DRG. NUMBER: DPD 36 109 0 066	SIZE: A3	ISSUE: 1
KERALA STATE ELECTRONICS DEVELOPMENT CORPORATION LIMITED				NO.OF SHEETS: 1 / 1	

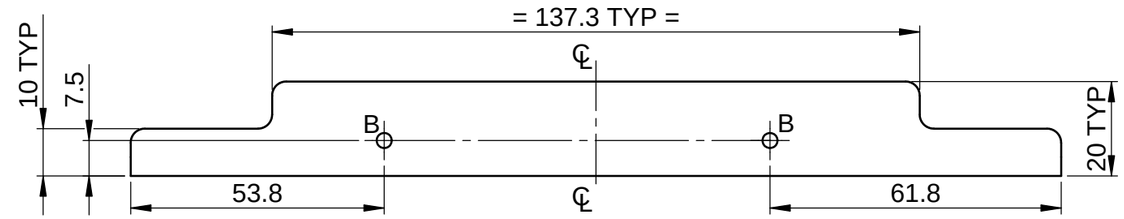

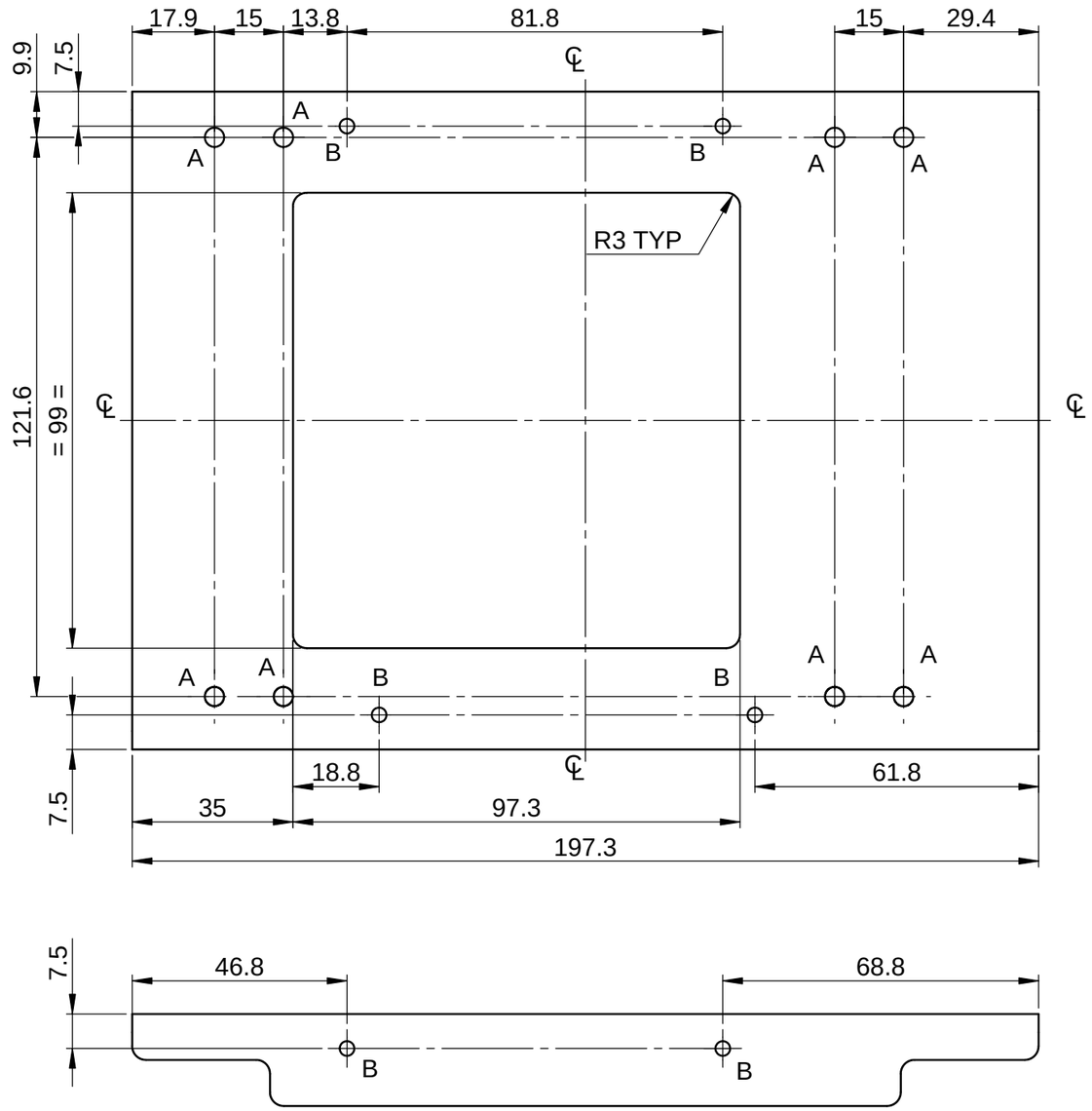

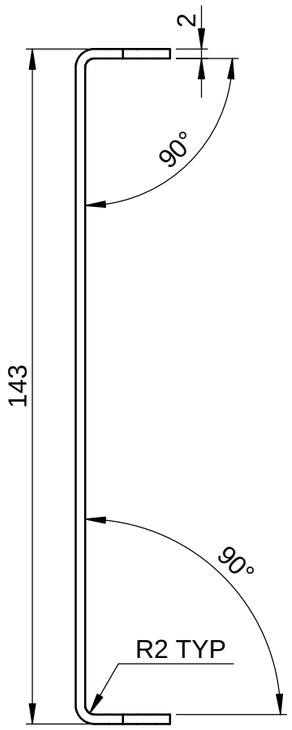

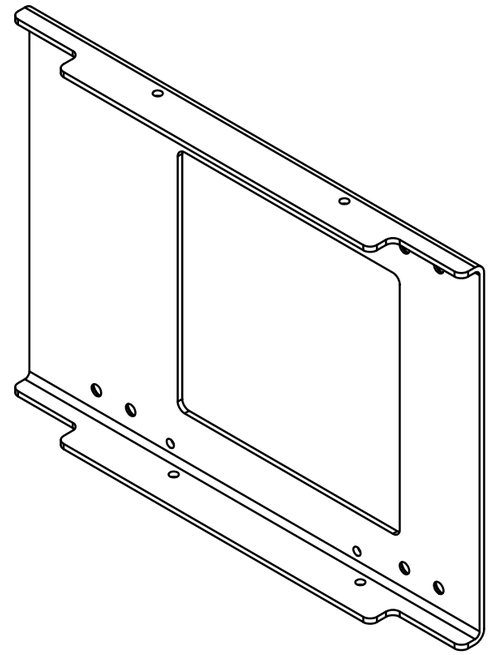

NOTE

1. AVOID SHARP CORNERS AND EDGES
2. ALL BURRS MUST BE REMOVED

SL NO	REF	DESCRIPTION	QTY
1	A	∅4.2 ⌵ ∅6.8	8
2	B	∅3.2	8

REV	CN.NO.	DATE	DESCRIPTION	CHECKED	APPROVED	NEXT ASSEMBLY	ITEM	QTY
4								
3								
2								
1								
0		19.08.17	ORIGINAL			DSA 36 109 0 018	10	1

MATERIAL: 2 mm SS 316 SHEET	FINISH: --	PROJ.	TOL.GEN. ± IS:2102 TOL.AXIS. ± (MED)	PRJ. 109	
DRAWN: MALIKSAD	CHECKED	APPROVED	DIMNS: mm	SCALE: NTS	TITLE: CARD GUIDE RIGHT SHEET
DATE 19.08.17	DATE	DATE	DRG. NUMBER: DPD 36 109 0 070	SIZE: A3	ISSUE: 1
KERALA STATE ELECTRONICS DEVELOPMENT CORPORATION LIMITED				NO.OF SHEETS: 1/1	

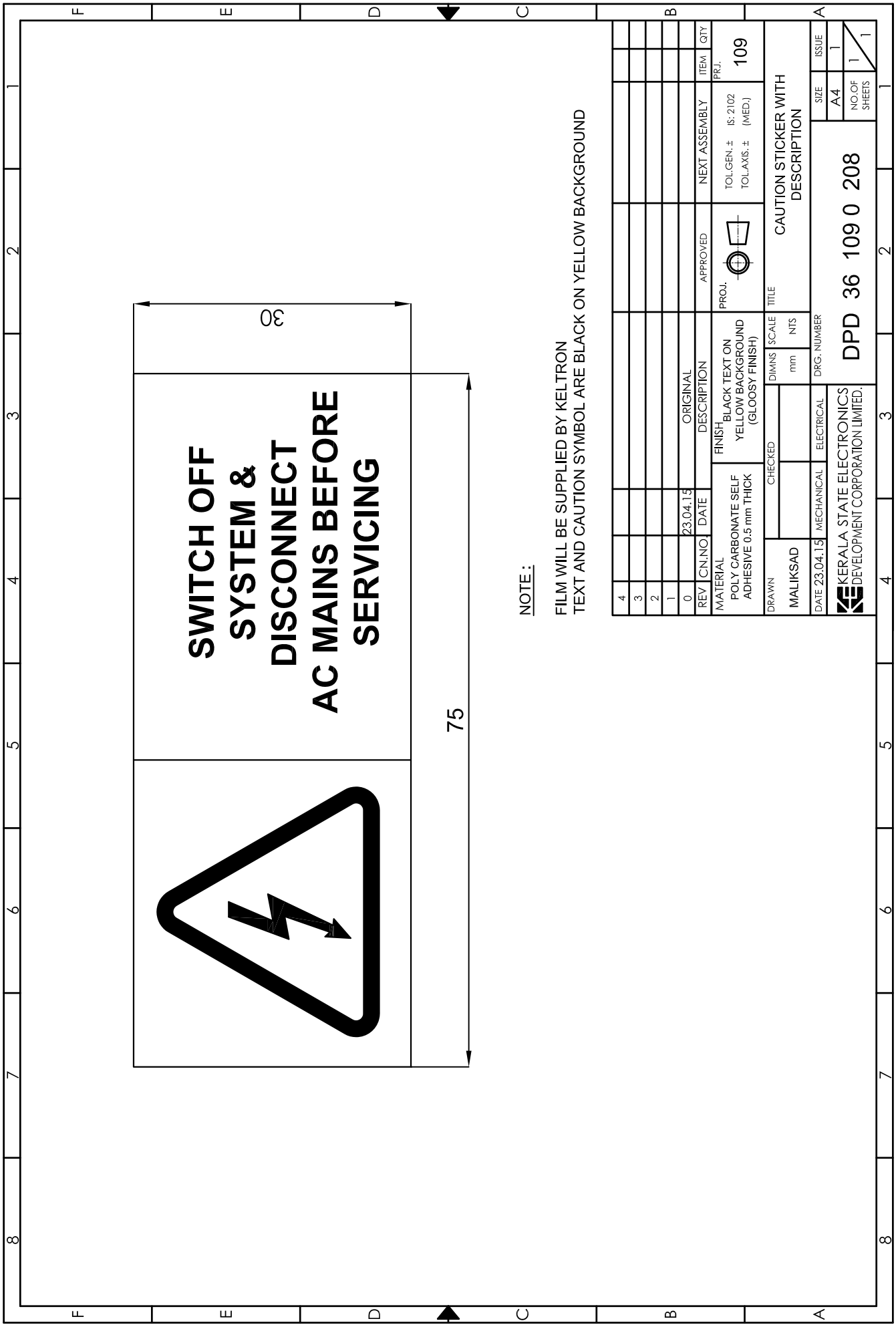
SWITCH OFF
SYSTEM &
DISCONNECT
AC MAINS BEFORE
SERVICING
30
75
NOTE :
FILM WILL BE SUPPLIED BY KELTRON
TEXT AND CAUTION SYMBOL ARE BLACK ON YELLOW BACKGROUND
4
3
2
1
0
REV
CN.NO
DATE
ORIGINAL
23.04.15
DESCRIPTION
MATERIAL
POLY CARBONATE SELF
ADHESIVE 0.5 mm THICK
FINISH
BLACK TEXT ON
YELLOW BACKGROUND
(GLOOSY FINISH)
APPROVED
PROJ.
NEXT ASSEMBLY
ITEM
QTY
PRJ.
109
TOL.GEN. ±
TOL.AXIS. ±
IS: 2102
(MED.)
DRAWN
MALIKSAD
DATE 23.04.15
CHECKED
MECHANICAL
ELECTRICAL
DIMNS
mm
SCALE
NTS
DRG. NUMBER
TITLE
CAUTION STICKER WITH
DESCRIPTION
KERALA STATE ELECTRONICS
DEVELOPMENT CORPORATION LIMITED.
DPD 36 109 0 208
SIZE
A4
ISSUE
1
NO.OF
SHEETS
1
1

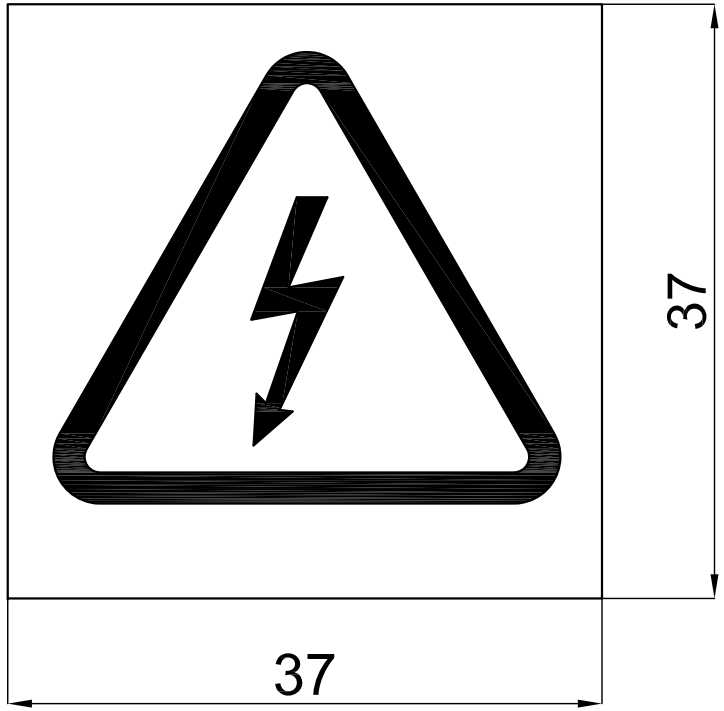

NOTE :

FILM WILL BE SUPPLIED BY KELTRON
TEXT AND CAUTION SYMBOL ARE BLACK ON YELLOW BACKGROUND

REV	CN.NO.	DATE	DESCRIPTION	APPROVED	NEXT ASSEMBLY	ITEM	QTY
4							
3							
2							
1							
0		23.04.15	ORIGINAL				

MATERIAL POLY CARBONATE SELF ADHESIVE 0.5 mm THICK	FINISH BLACK TEXT ON YELLOW BACKGROUND (GLOOSY FINISH)	PROJ.	TOL.GEN. ± IS: 2102 TOL.AXIS. ± (MED.)	PRJ. 109

DRAWN	CHECKED		DIMNS	SCALE	TITLE
MALIKSAD			mm	NTS	CAUTION STICKER
DATE 23.04.15	MECHANICAL	ELECTRICAL	DRG. NUMBER		SIZE A4 / ISSUE 1
KERALA STATE ELECTRONICS DEVELOPMENT CORPORATION LIMITED.			DPD 36 109 0 207		NO.OF SHEETS 1/1

RESTRICTED

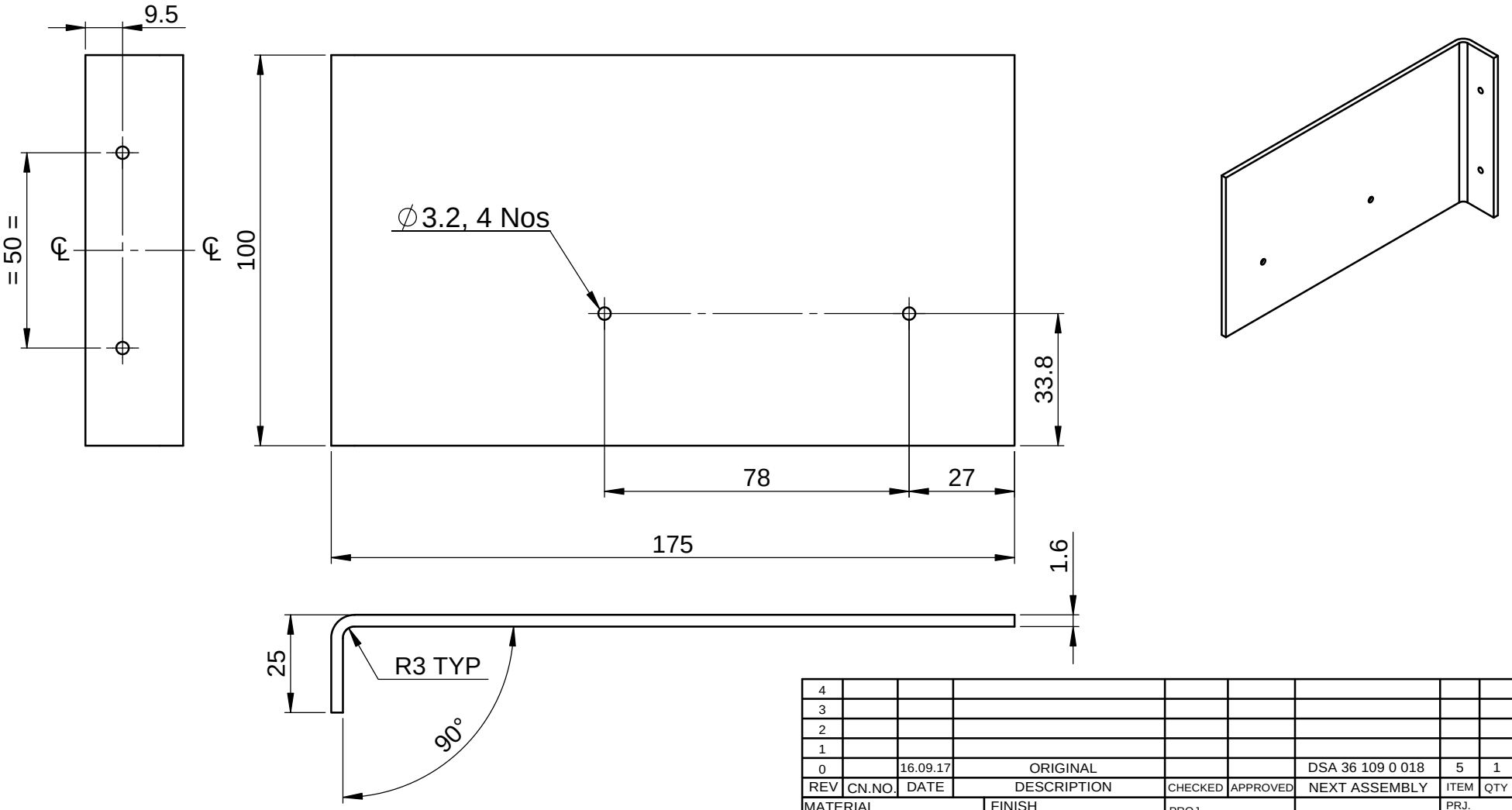

NOTE

AVOID SHARP EDGES AND CORNERS

REV	CN.NO.	DATE	DESCRIPTION	CHECKED	APPROVED	NEXT ASSEMBLY	ITEM	QTY
4								
3								
2								
1								
0		16.09.17	ORIGINAL			DSA 36 109 0 018	5	1

MATERIAL	FINISH	PROJ.		PRJ.
1.6 mm SS 316 SHEET	--		TOL.GEN. ± IS: 2102 TOL.AXIS. ± (MED.)	109

DRAWN	CHECKED	APPROVED	DIMNS	SCALE	TITLE
MALIKSAD			mm	NTS	CLAMP FOR PS1 POWER SUPPLY
DATE 16.09.17	DATE	DATE	DRG. NUMBER		SIZE / ISSUE

KERALA STATE ELECTRONICS DEVELOPMENT CORPORATION LIMITED

DPD 36 109 0 067

SIZE: A4 | ISSUE: 1

NO.OF SHEETS: 1 / 1

RESTRICTED

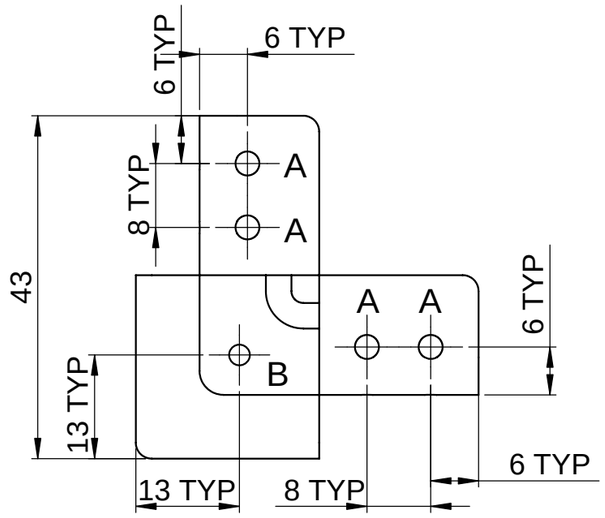

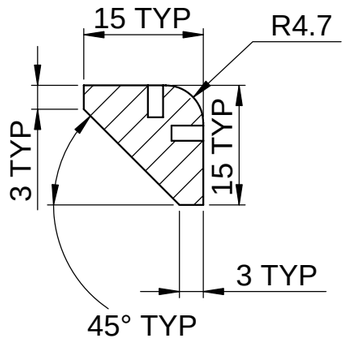

SECTION A-A

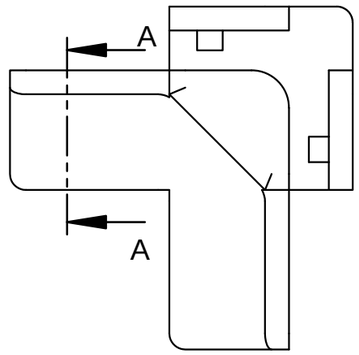

REAR VIEW

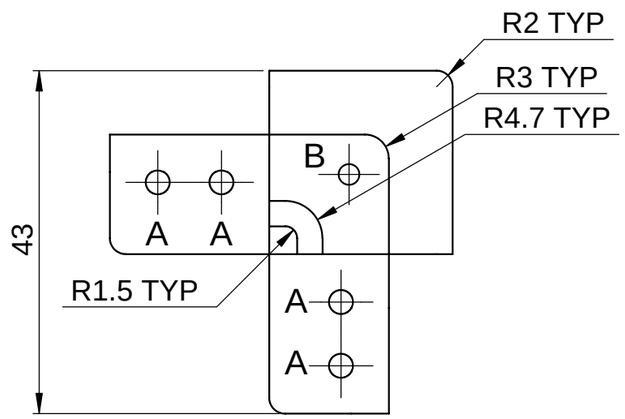

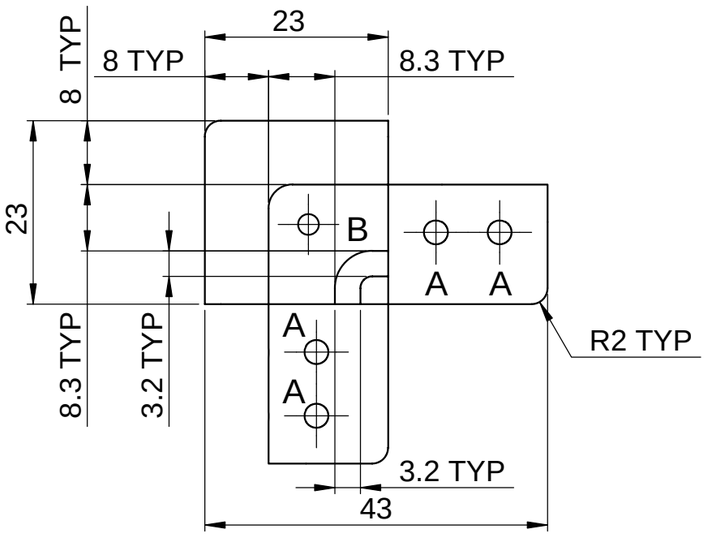

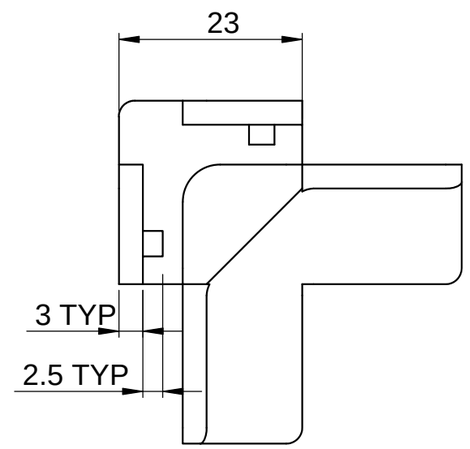

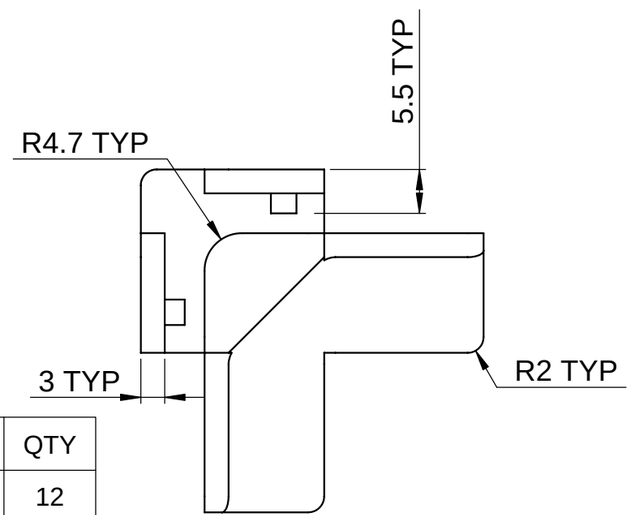

NOTE

1. AVOID SHARP EDGES AND CORNERS
2. ALL BURRS MUST BE REMOVED

SL NO	REF	DESCRIPTION	QTY
3	A	DRILL ⌀3.1, ↧4 AND M3 HELICOIL TAP	12
6	B	DRILL ⌀4.1, ↧6 AND M4 HELICOIL TAP	3

REV	CN.NO.	DATE	DESCRIPTION	CHECKED	APPROVED	NEXT ASSEMBLY	ITEM	QTY
4								
3								
2								
1								
0		25.08.17	ORIGINAL			DSA 36 109 0 020	1	8

MATERIAL	FINISH	PROJ.		PRJ.
ALUMINIUM HE-30	YELLOW CC COATING		TOL.GEN. ± IS:2102 TOL.AXIS. ± (MED)	109

DRAWN	CHECKED	APPROVED	DIMNS	SCALE	TITLE
MALIKSAD			mm	NTS	CORNER CONNECTOR

DATE 25.08.17	DATE	DATE	DRG. NUMBER	SIZE	ISSUE
KERALA STATE ELECTRONICS DEVELOPMENT CORPORATION LIMITED.			DPD 36 109 0 087	A3	1
				NO.OF SHEETS	1 / 2

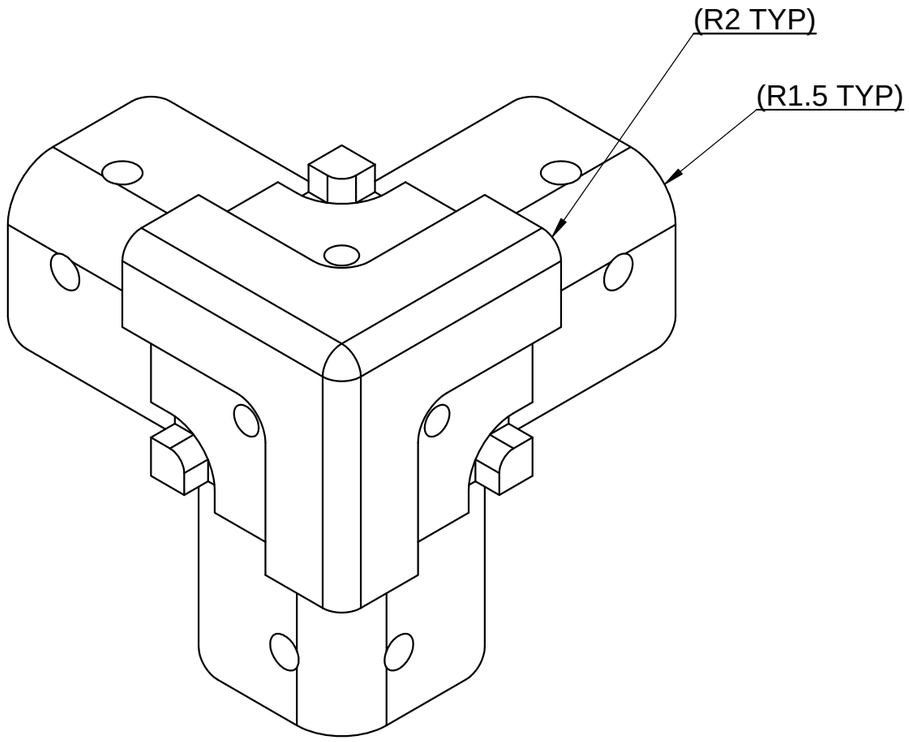

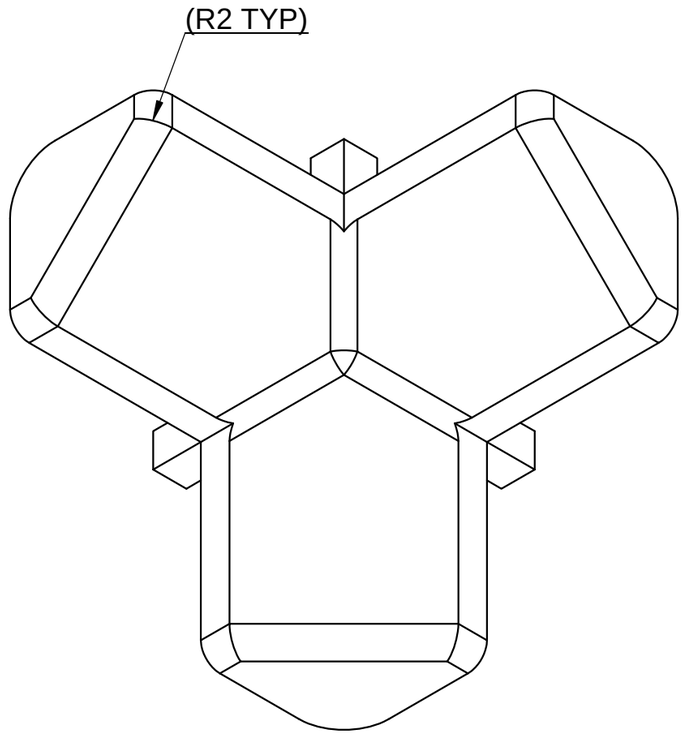

REV	CN.NO.	DATE	DESCRIPTION	CHECKED	APPROVED	NEXT ASSEMBLY	ITEM	QTY
4								
3								
2								
1								
0		25.08.17	ORIGINAL			DSA 36 109 0 020	1	8

MATERIAL: ALUMINIUM HE-30	FINISH: YELLOW CC COATING	PROJ.	TOL.GEN. ± IS:2102 TOL.AXIS. ± (MED)	PRJ. 109	
DRAWN: MALIKSAD	CHECKED	APPROVED	DIMNS: mm	SCALE: NTS	TITLE: CORNER CONNECTOR
DATE 25.08.17	DATE	DATE	DRG. NUMBER: DPD 36 109 0 087	SIZE: A3	ISSUE: 1
KERALA STATE ELECTRONICS DEVELOPMENT CORPORATION LIMITED.				NO.OF SHEETS: 2 / 2	

RESTRICTED

RESTRICTED

SL NO	REF	DESCRIPTION	QTY
1	A	∅8.2	1
2	B	∅6	4

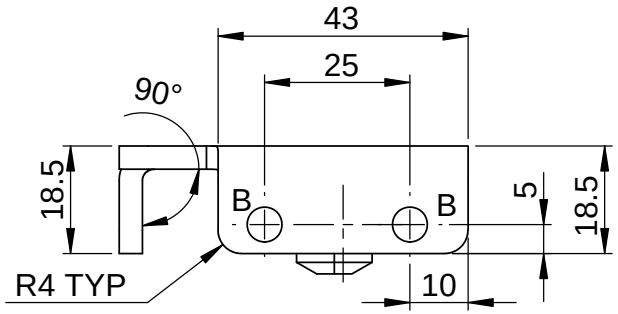

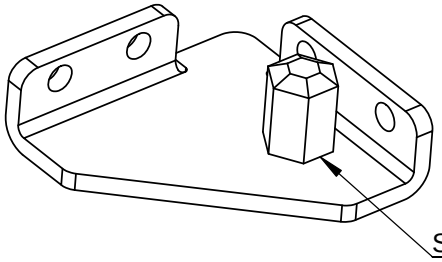

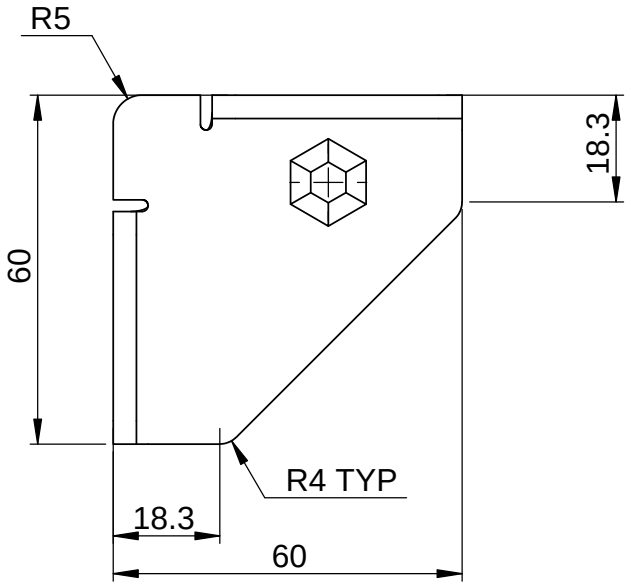

BOTTOM VIEW

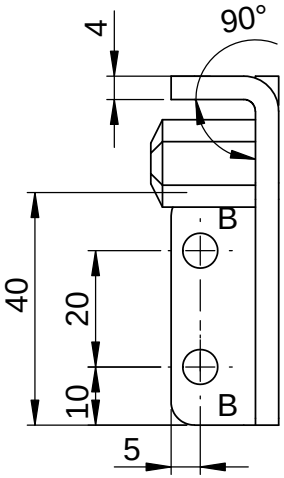

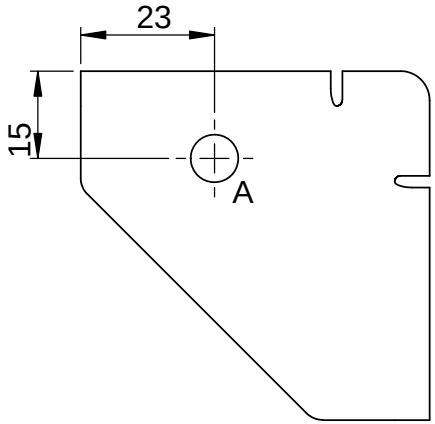

NOTE

1. AVOID SHARP CORNERS AND EDGES
2. BURRS MUST BE REMOVED
3. M8x15mm HEIGHT SS BLIND NUT TO BE WELDED ON THE BOTTOM SIDE OF GUSSET IN LINE WITH HOLE 'A'

REV	CN.NO.	DATE	DESCRIPTION	CHECKED	APPROVED	NEXT ASSEMBLY	ITEM	QTY
4								
3								
2								
1								
0		12.08.17	ORIGINAL			DSA 36 109 0 018	2	2

MATERIAL	FINISH	PROJ.	TOL.GEN. ± IS: 2102 TOL.AXIS. ± (MED.)	PRJ.
SS 316	--			109

DRAWN	CHECKED	APPROVED	DIMNS	SCALE	TITLE
MALIKSAD			mm	NTS	CORNER GUSSET-1

DATE	DATE	DATE	DRG. NUMBER	SIZE	ISSUE
12.08.17			DPD 36 109 0 088	A4	1

KERALA STATE ELECTRONICS DEVELOPMENT CORPORATION LIMITED

NO.OF SHEETS 1 / 1

RESTRICTED

RESTRICTED

SL NO	REF	DESCRIPTION	QTY
1	A	∅8.2	1
2	B	∅6	4

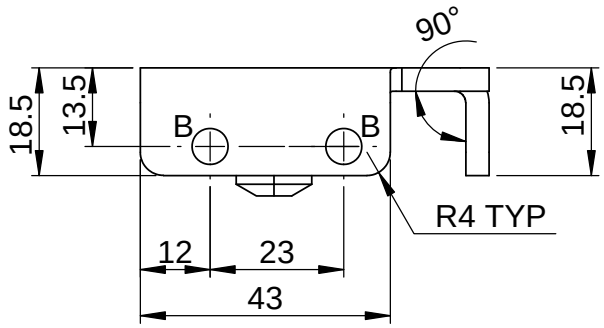

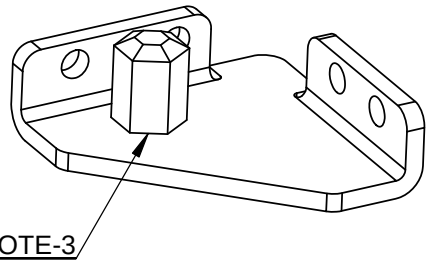

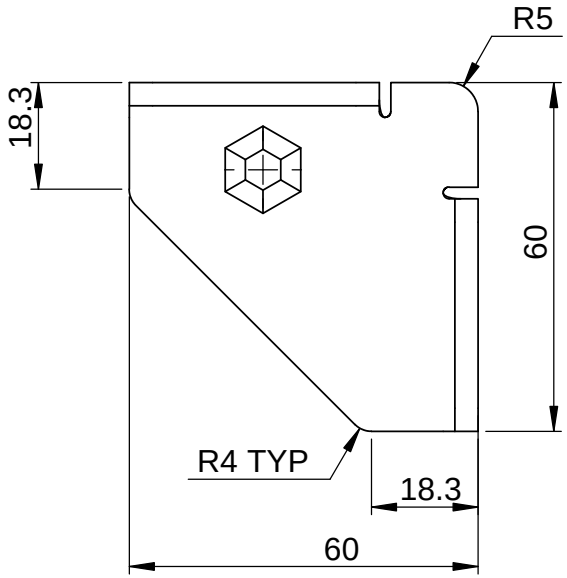

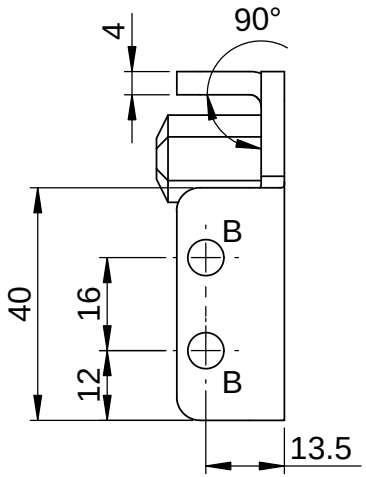

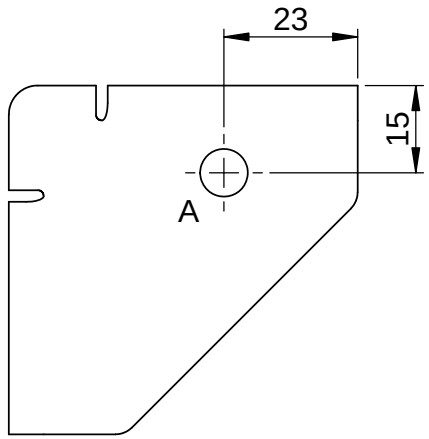

NOTE

1. AVOID SHARP CORNERS AND EDGES
2. BURRS MUST BE REMOVED
3. M8x15mm HEIGHT SS BLIND NUT TO BE WELDED ON THE BOTTOM SIDE OF GUSSET IN LINE WITH HOLE 'A'

REV	CN.NO.	DATE	DESCRIPTION	CHECKED	APPROVED	NEXT ASSEMBLY	ITEM	QTY
4								
3								
2								
1								
0		12.08.17	ORIGINAL			DSA 36 109 0 020	4	2

MATERIAL	FINISH	PROJ.		PRJ.
SS 316	--		TOL.GEN. ± IS: 2102 TOL.AXIS. ± (MED.)	109

DRAWN	CHECKED	APPROVED	DIMNS	SCALE	TITLE
MALIKSAD			mm	NTS	CORNER GUSSET-2
DATE 12.08.17	DATE	DATE	DRG. NUMBER		SIZE: A4 / ISSUE: 1
KERALA STATE ELECTRONICS DEVELOPMENT CORPORATION LIMITED			DPD 36 109 0 090		NO.OF SHEETS: 1 / 1

RESTRICTED

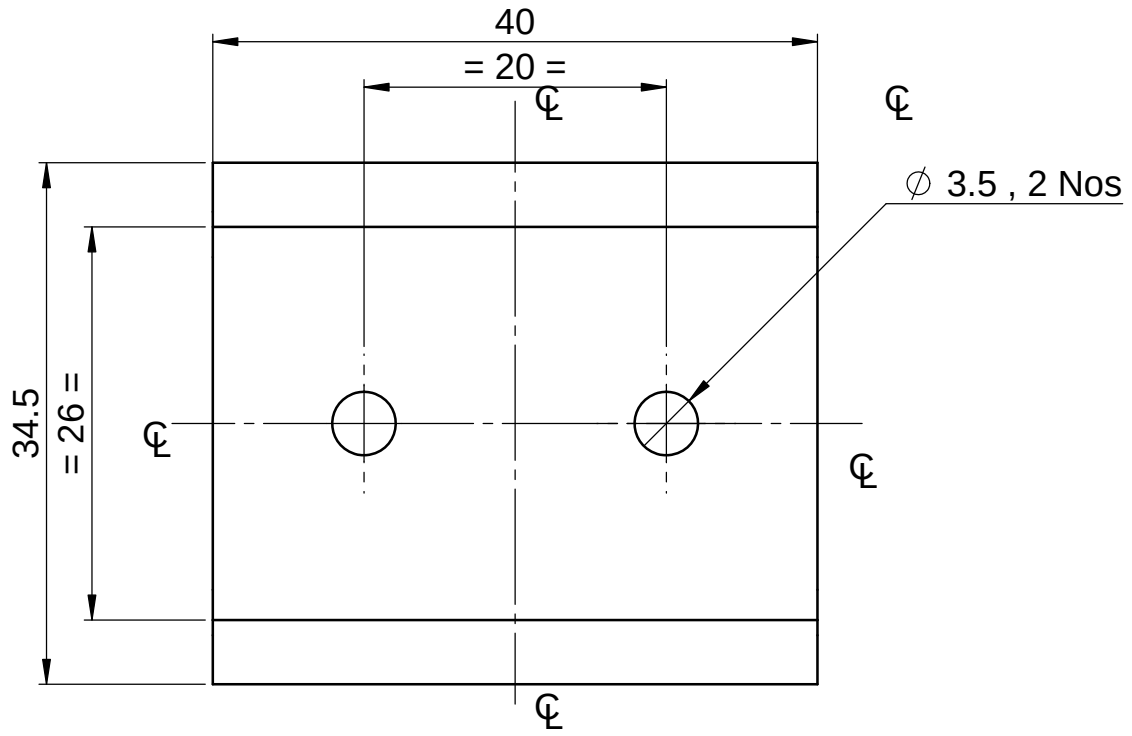

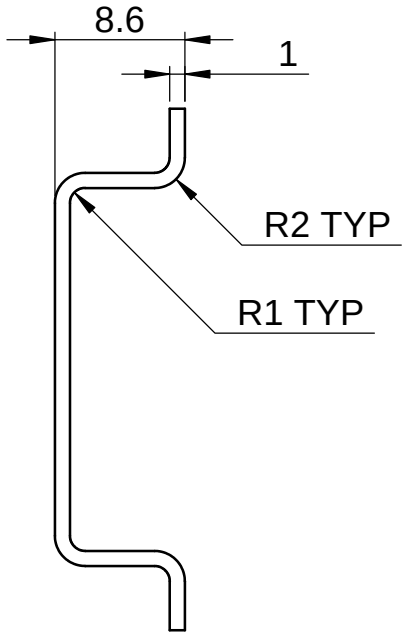

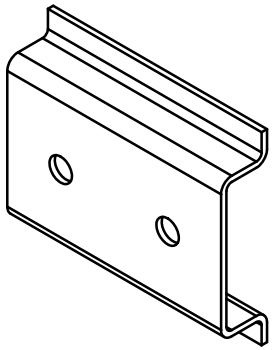

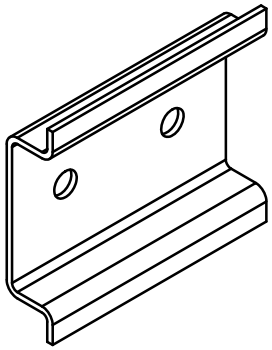

NOTE

1. AVOID SHARP CORNERS AND EDGES

REV	CN.NO.	DATE	DESCRIPTION	CHECKED	APPROVED	NEXT ASSEMBLY	ITEM	QTY
4								
3								
2								
1								
0		10.11.16	ORIGINAL			DSA 36 109 0 012		1

MATERIAL	FINISH	PROJ.		PRJ.
1 mm SS 316 SHEET	-		TOL.GEN. ± IS: 2102 TOL.AXIS. ± (MED.)	109

DRAWN	CHECKED	APPROVED	DIMNS	SCALE	TITLE
MALIKSAD			mm	NTS	DIN RAIL
DATE 10.11.16	DATE	DATE	DRG. NUMBER		SIZE / ISSUE
KERALA STATE ELECTRONICS DEVELOPMENT CORPORATION LIMITED			DPD 36 109 0 119		A4 / 1
					NO.OF SHEETS 1 / 1

RESTRICTED

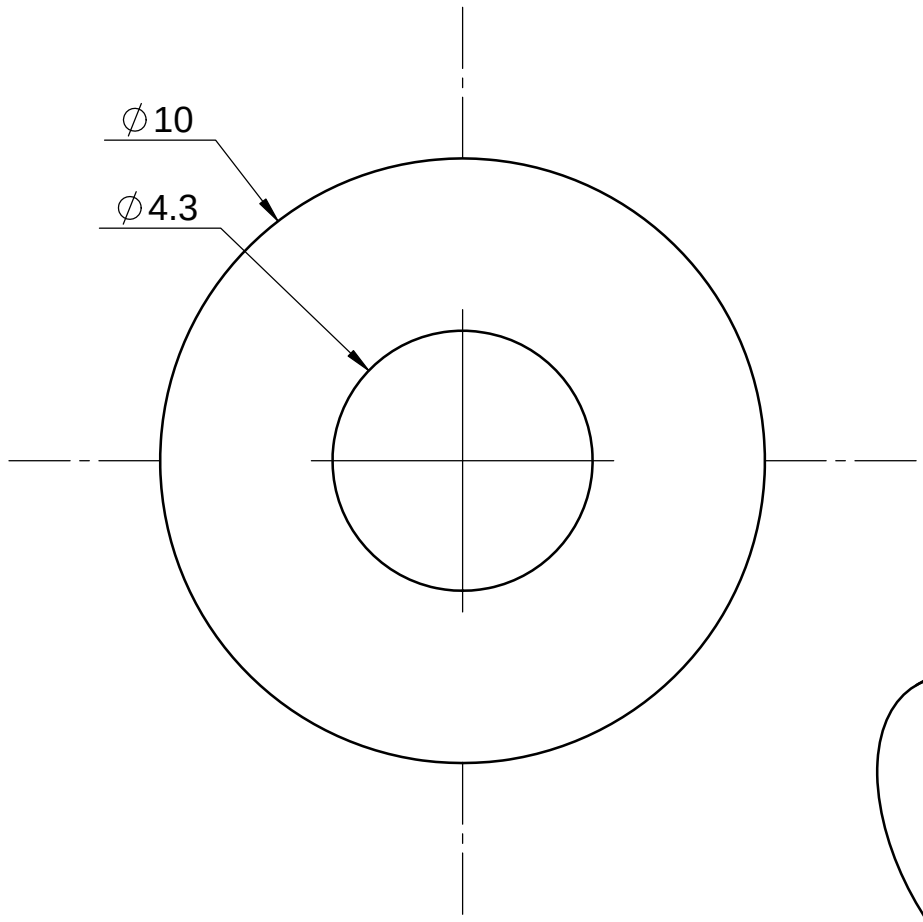

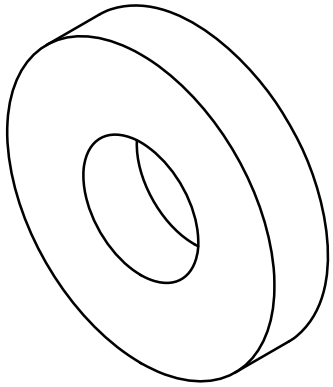

REV	CN.NO.	DATE	DESCRIPTION	CHECKED	APPROVED	NEXT ASSEMBLY	ITEM	QTY
4								
3								
2								
1								
0		13.11.19	ORIGINAL			-	-	-

MATERIAL	FINISH	PROJ.		PRJ.
SS-316	-		TOL.GEN. ± IS:2102 TOL.AXIS. ± (MED)	109

DRAWN	CHECKED	APPROVED	DIMNS	SCALE	TITLE
MALIKSAD	MANJULAL	VK	mm	NTS	DOOR LOCKING LEVER WASHER

DATE 13.11.19	DATE	DATE	DRG. NUMBER	SIZE	ISSUE
KERALA STATE ELECTRONICS DEVELOPMENT CORPORATION LIMITED			DPD 36 109 0 278	A4	1
				NO.OF SHEETS	1 / 1

RESTRICTED

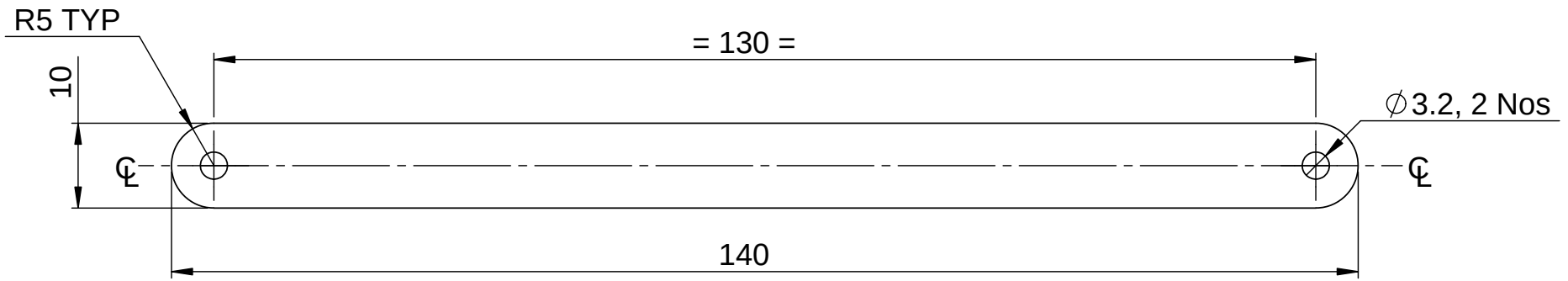

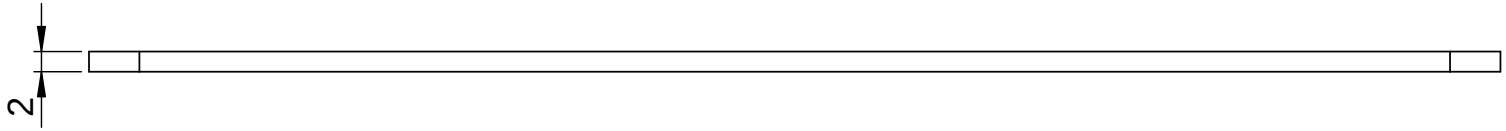

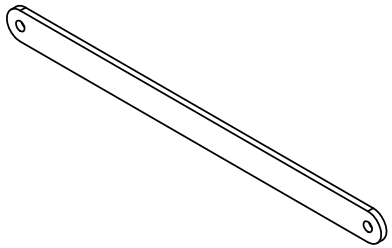

NOTE:

AVOID SHARP EDGES AND CORNERS

REV	CN.NO.	DATE	DESCRIPTION	CHECKED	APPROVED	NEXT ASSEMBLY	ITEM	QTY
4								
3								
2								
1								
0		18.11.17	ORIGINAL			DSA 36 109 0 011	05	01

MATERIAL	FINISH	PROJ.		PRJ.
SS 316 2mm SHEET	-		TOL.GEN. ± IS: 2102 TOL.AXIS. ± (MED.)	109

DRAWN	CHECKED	APPROVED	DIMNS	SCALE	TITLE
MALIKSAD			mm	NTS	DOOR STOPPER LEVER
DATE 18.11.17	DATE	DATE	DRG. NUMBER		SIZE: A4 / ISSUE: 1
KERALA STATE ELECTRONICS DEVELOPMENT CORPORATION LIMITED			DPD 36 109 0 039		NO.OF SHEETS: 1 / 1

RESTRICTED

RESTRICTED

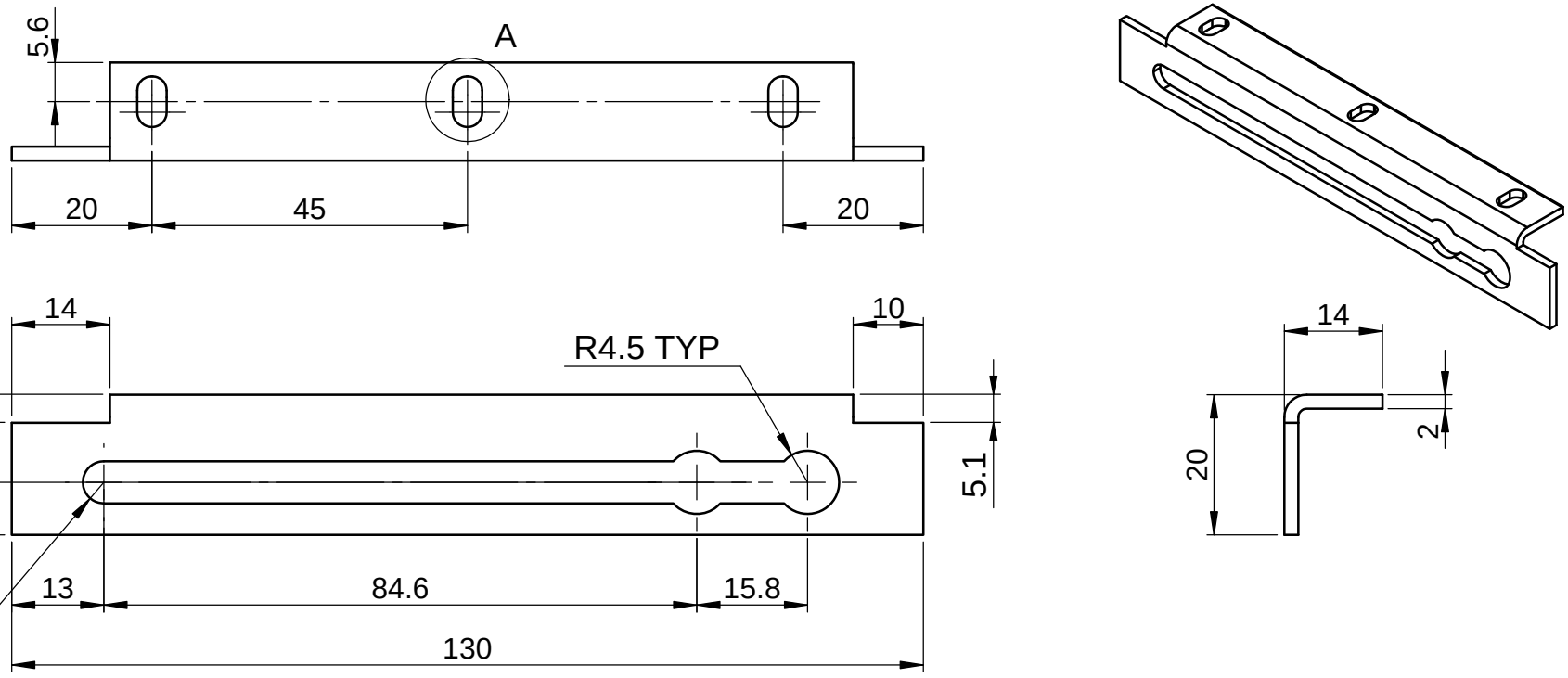

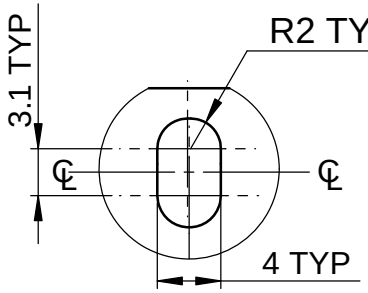

DETAIL A

NOTE:

1. AVOID SHARP EDGES AND CORNERS
2. ALL BURRS MUST BE REMOVED

4								
3								
2								
1								
0		10.10.17	ORIGINAL			DSA 36 109 0 020	20	1
REV	CN.NO.	DATE	DESCRIPTION	CHECKED	APPROVED	NEXT ASSEMBLY	ITEM	QTY

MATERIAL: SS 316	FINISH: --	PROJ.	TOL.GEN. ± IS: 2102 TOL.AXIS. ± (MED.)	PRJ. 109	
DRAWN: MALIKSAD	CHECKED	APPROVED	DIMNS: mm	SCALE: NTS	TITLE: DOOR STOPPER GUIDE
DATE 10.10.17	DATE	DATE	DRG. NUMBER: DPD 36 109 0 112	SIZE: A4	ISSUE: 1
KERALA STATE ELECTRONICS DEVELOPMENT CORPORATION LIMITED				NO.OF SHEETS: 1 / 1	

RESTRICTED

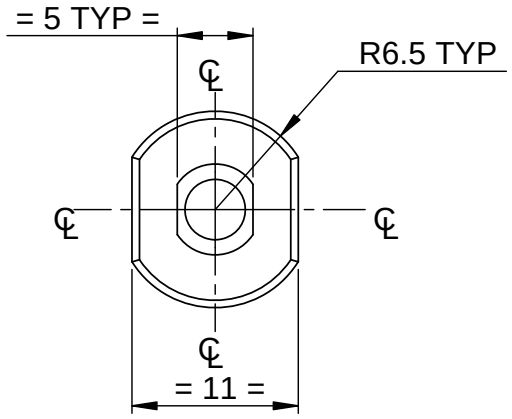

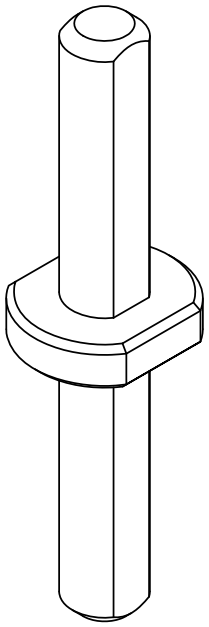

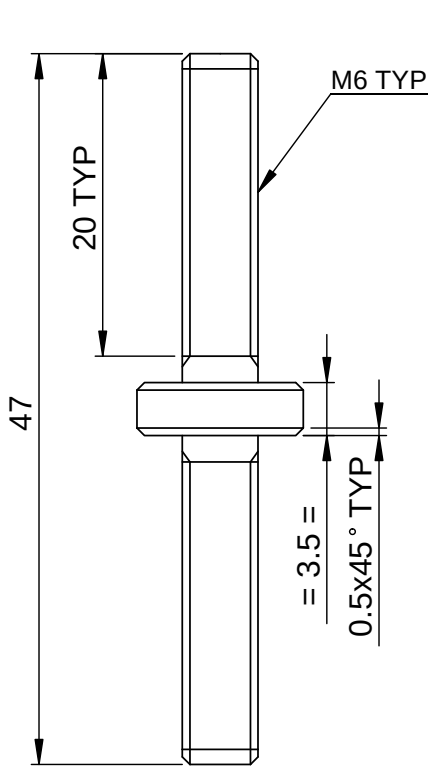

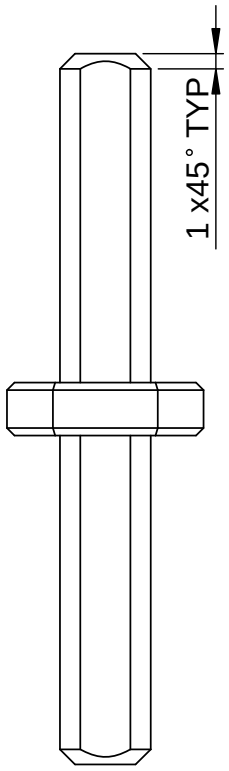

REV	CN.NO.	DATE	DESCRIPTION	CHECKED	APPROVED	NEXT ASSEMBLY	ITEM	QTY
4								
3								
2								
1								
0		18.09.17	ORIGINAL			DSA 36 109 0 016	3	1

MATERIAL	FINISH	PROJ.		PRJ.
BRASS	--		TOL.GEN. ± IS:2102 TOL.AXIS. ± (MED)	109

DRAWN	CHECKED	APPROVED	DIMNS	SCALE	TITLE
MALIKSAD			mm	NTS	EARTH STUD
DATE 18.09.17	DATE	DATE			

KERALA STATE ELECTRONICS DEVELOPMENT CORPORATION LIMITED.

DRG. NUMBER: DPD 36 109 0 115

SIZE	ISSUE
A4	1
NO.OF SHEETS	1 / 1

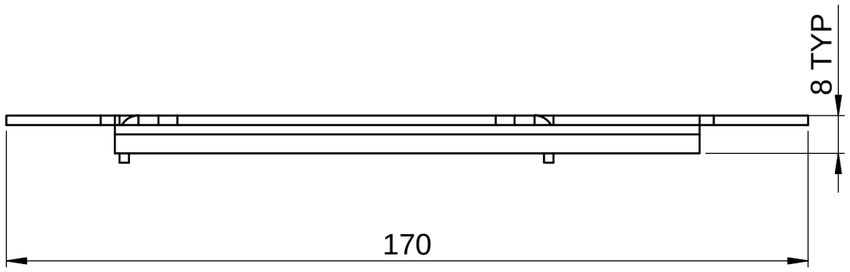

FAN5

DETAIL C

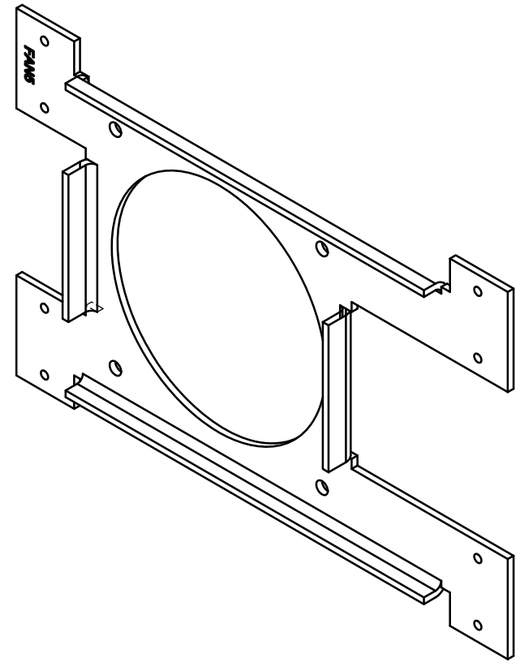

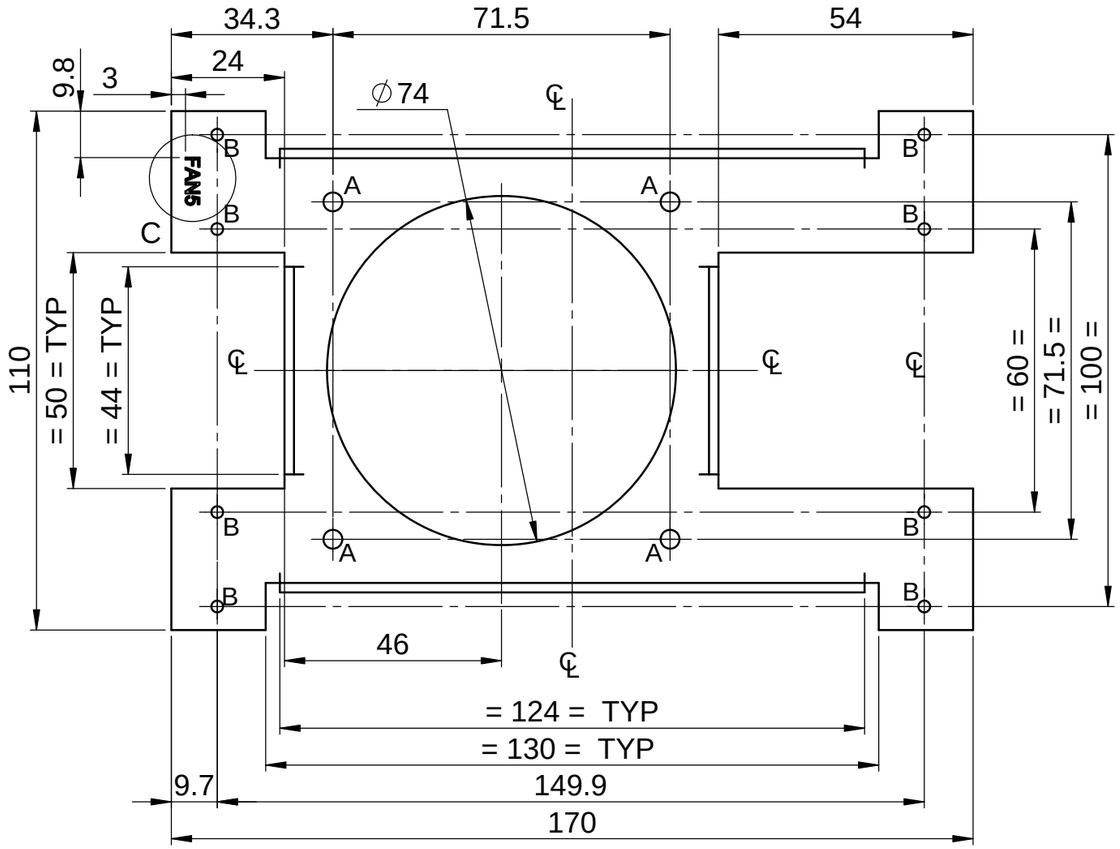

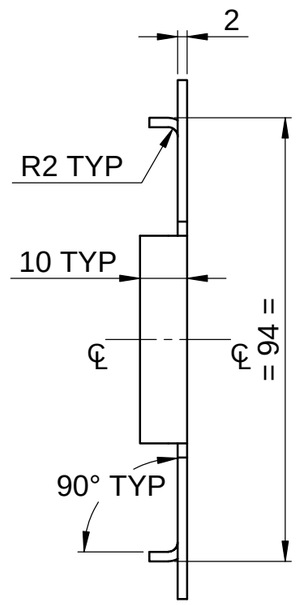

NOTE

1. AVOID SHARP CORNERS AND EDGES
2. ALL BURRS MUST BE REMOVED

SL NO	REF	DESCRIPTION	QTY
1	A	∅4.2	4
2	B	∅2.5	8

REV	CN.NO.	DATE	DESCRIPTION	CHECKED	APPROVED	NEXT ASSEMBLY	ITEM	QTY
4								
3								
2								
1								
0		19.08.17	ORIGINAL			DSA 36 109 0 012	18	1

MATERIAL: ALUMINIUM H32-5052	FINISH: YELLOW CC COATING	PROJ.	TOL.GEN. ± IS:2102 TOL.AXIS. ± (MED)	PRJ. 109	
DRAWN: MALIKSAD	CHECKED	APPROVED	DIMNS: mm	SCALE: NTS	TITLE: FAN CLAMP
DATE 19.08.17	DATE	DATE	DRG. NUMBER: DPD 36 109 0 069	SIZE: A3	ISSUE: 1
KERALA STATE ELECTRONICS DEVELOPMENT CORPORATION LIMITED.				NO.OF SHEETS: 1 / 1	

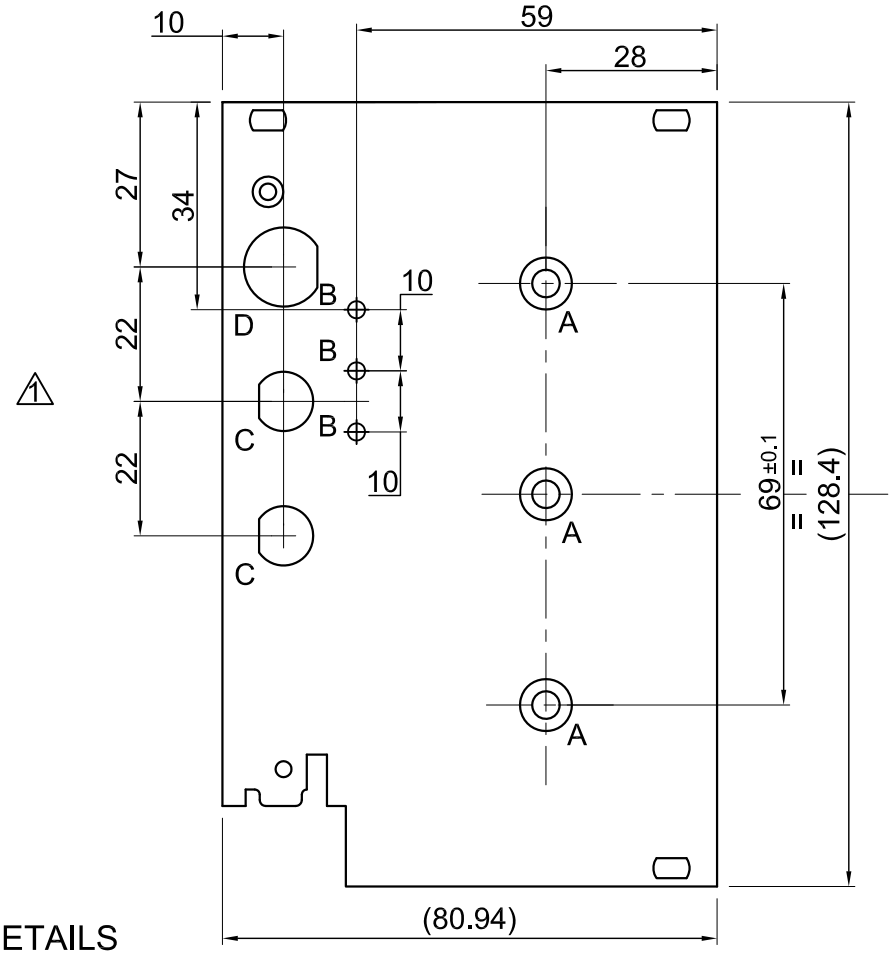

HOLE DETAILS

SL NO.	ITEM	QTY	DESCRIPTION
1	A	3	Ø4.5 CSK TO Ø 8.5
2	B	3	Ø3.1
3	C	2	Ø9.7, 8.85
4	D	1	12.00, 11.90, Ø12.95, 12.83

2

REV	CN.NO.	DATE	DESCRIPTION	CHECKED	APPROVED	NEXT ASSEMBLY	ITEM	QTY
4								
3								
2		26.08.19	REVISED					
1		14.05.13	REVISED					
0		15.03.13	ORIGINAL			DSA 36 109 0 100	53	1

MATERIAL	FINISH	PROJ.		PRJ.
STD FACIA,20848-232 SCHROFF	-		TOL.GEN. ± IS:2102 TOL.AXIS. ± MED	109

DRAWN	CHECKED	APPROVED	DIMNS	SCALE	TITLE
MALIKSAD			mm	NTS	FACIA PANEL-1
DATE 26.08.19	DATE	DATE			

KERALA STATE ELECTRONICS DEVELOPMENT CORPORATION LIMITED.

DRG. NUMBER: DPD 36 109 0 015

SIZE	ISSUE
A4	1
NO.OF SHEETS	1/1

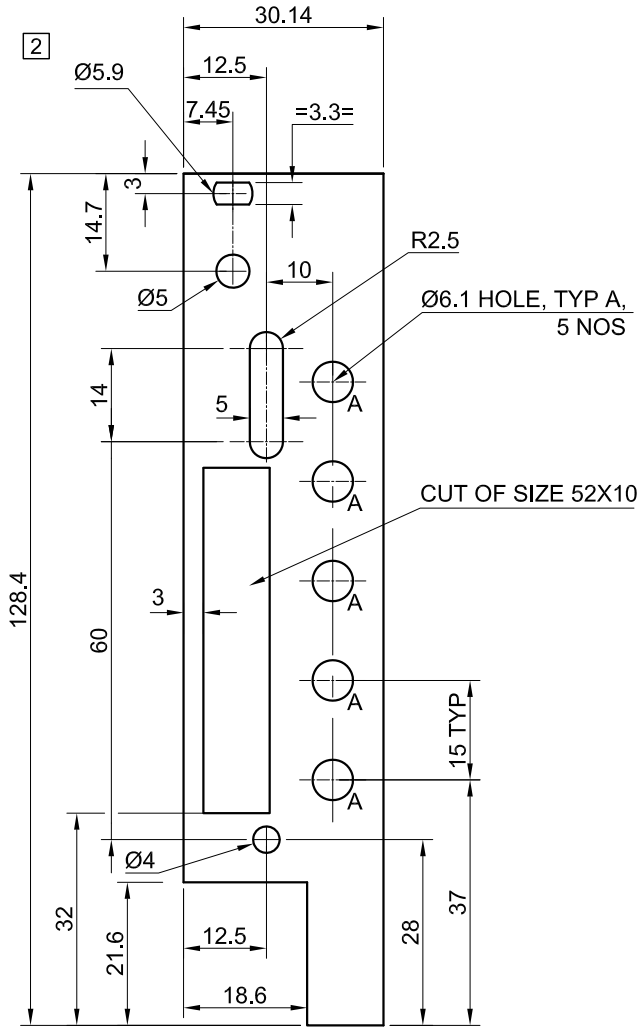

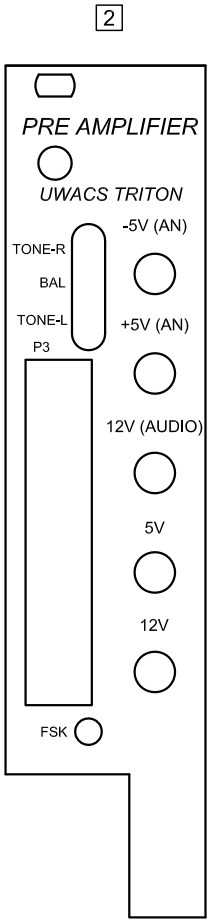

FASCIA LABEL
DETAILS

NOTE:-
FILM WILL BE SUPPLIED BY KELTRON

REV	CN.NO.	DATE	DESCRIPTION	CHECKED	APPROVED	NEXT ASSEMBLY	ITEM	QTY
4								
3								
2		17.08.16	REVISED					
1		10.09.13	REVISED					
0		16.03.13	ORIGINAL			DSA 36 109 0 101	-	1

MATERIAL	FINISH	PROJ.		PRJ.
POLY CARBONATE SELF ADHESIVE 0.5 mm THICK	BLACK TEXT ON WHITE BACKGROUND (GLOSSY FINISH)		TOL.GEN. ± IS:2102 TOL.AXIS. ± (MED)	109

DRAWN	CHECKED	APPROVED	DIMNS	SCALE	TITLE
MALIKSAD			mm	NTS	FASCIA LABEL-2 (PRE AMPLIFIER)
DATE 17.08.16	DATE	DATE			

KERALA STATE ELECTRONICS DEVELOPMENT CORPORATION LIMITED.

DRG. NUMBER: DPD 36 109 0 023

SIZE	ISSUE
A4	1
NO.OF SHEETS	1 / 1

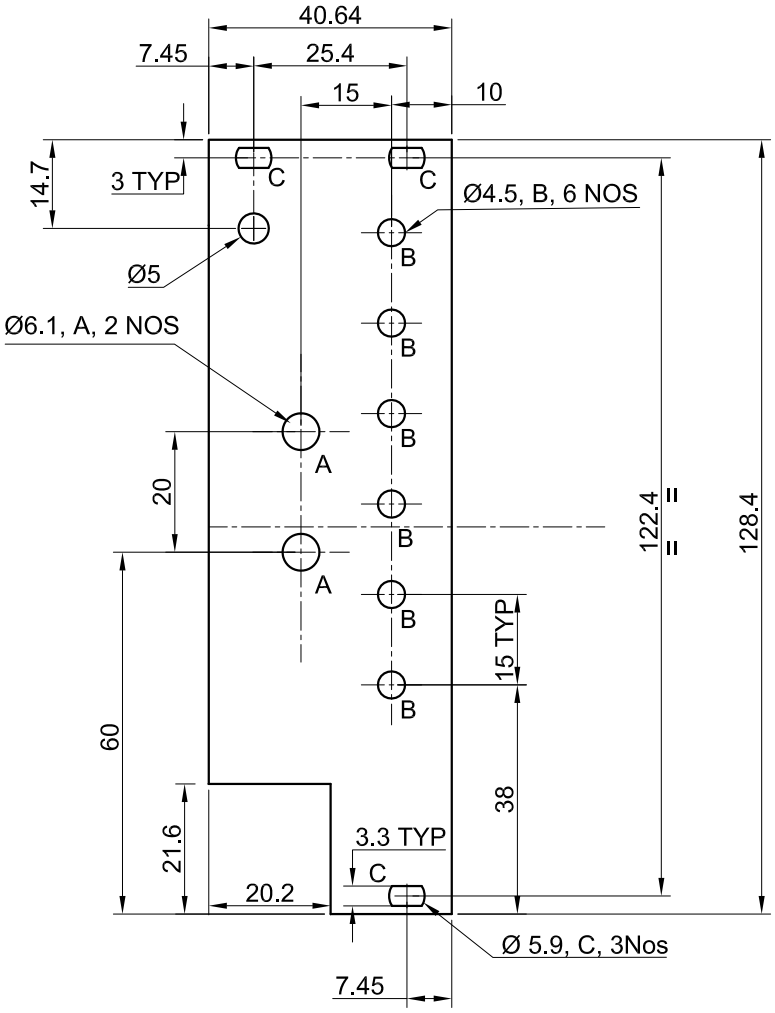

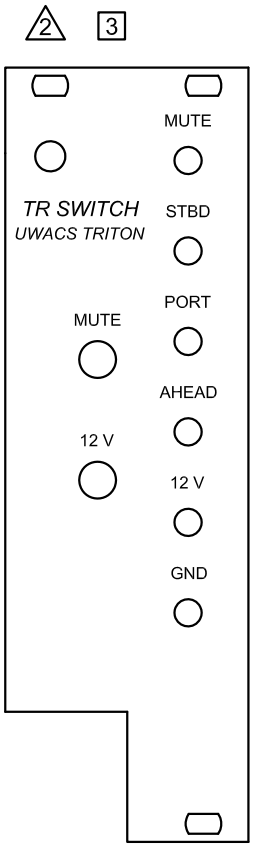

FACIA LABEL
DETAILS

NOTE:-
FILM WILL BE SUPPLIED BY KELTRON

REV	CN.NO.	DATE	DESCRIPTION	CHECKED	APPROVED	NEXT ASSEMBLY	ITEM	QTY
4								
3		17.08.16	REVISED					
2		22.04.15	REVISED					
1		10.09.13	REVISED					
0		16.03.13	ORIGINAL			DSA 36 109 0 102		1

MATERIAL: POLY CARBONATE SELF ADHESIVE 0.5 mm THICK	FINISH: BLACK TEXT ON WHITE BACKGROUND (GLOSSY FINISH)	PROJ.	TOL.GEN. ± IS:2102 TOL.AXIS. ± (MED)	PRJ. 109	
DRAWN: MALIKSAD	CHECKED	APPROVED	DIMNS: mm	SCALE: NTS	TITLE: FASCIA LABEL-3 (TR SWITCH)
DATE 17.08.16	DATE	DATE	DRG. NUMBER: DPD 36 109 0 024	SIZE: A4	ISSUE: 1
KERALA STATE ELECTRONICS DEVELOPMENT CORPORATION LIMITED.				NO.OF SHEETS: 1 / 1	

DEVIATION FOR NON - TOLERANCED DIMENSIONS (IS : 2102 - MEDIUM)													
ABOVE	0.5	6	30	120	315	1000	2000	ABOVE & UP TO	0.5 - 6	6 - 30	30 - 120	120 - 400	
UP TO	6	30	120	315	1000	2000		TOL.	± 1°	± 30'	± 20'	± 10'	
TOL.	±0.1	±0.2	±0.3	±0.5	±0.8	±1.2							

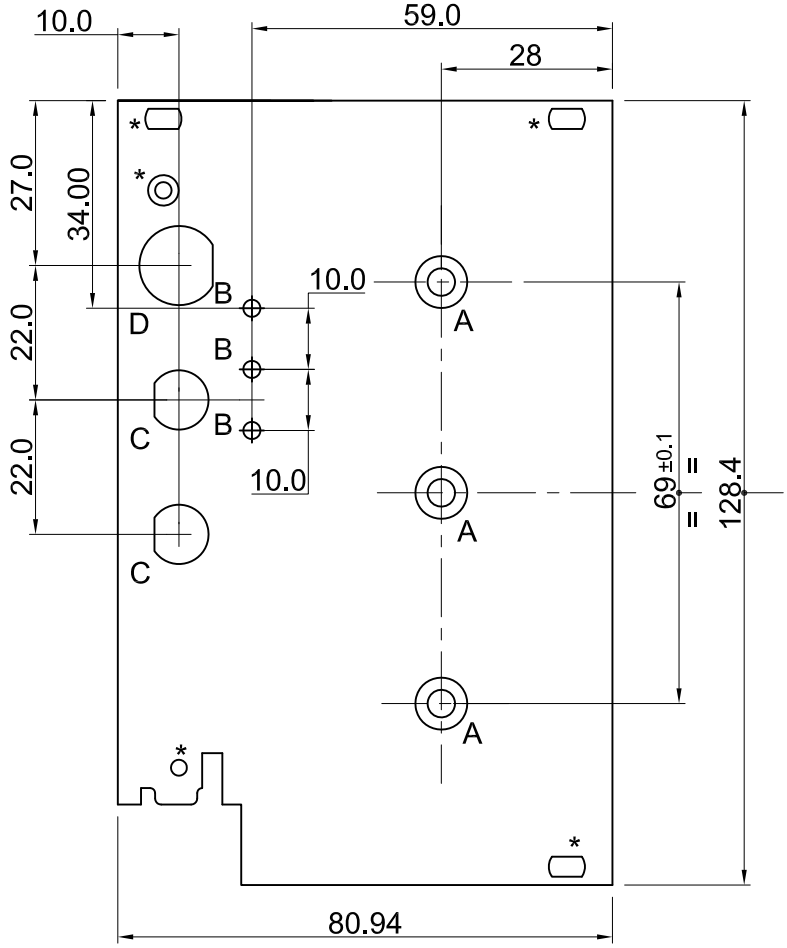

HOLE DETAILS

SL NO.	ITEM	QTY	DESCIPTION
1	A	3	Ø4.5 CSK TO Ø 8.5
2	B	3	Ø2.8
3	C	2	Ø9.7, 8.85
4	D	1	12.00, 11.90, Ø12.95, 12.83

MODIFICATION DETAILS
(FRONT VIEW)

*EXISTING HOLES

REV	CN.NO.	DATE	DESCRIPTION	ENGINEER	APPROVED	NUMBER	ITEM	QTY
4								
3								
2								
1		14-05-13	REVISED					
0		15-03-13	ORIGINAL			DSA 36 109 0 100	-	1

MATERIAL	FINISH	PROJ.	NEXT ASSEMBLY	
STD FACIA,20848-232 SCHROFF	-		TOL.GEN. ± - TOL.AXIS. ± -	PRJ. SP-109

DRAWN	CHECKED	ENGINEER	DIMNS	SCALE	TITLE
ROBIN			mm	NTS	FACIA PANEL-1 MODIFICATION (POWER AMPLIFIER)
DATE 15-03-13	DATE	DATE 15-03-13	DOC CODE	DRG. NUMBER	SIZE / ISSUE

KERALA STATE ELECTRONICS DEVELOPMENT CORPORATION LIMITED.

DPD 36 109 0 015

A4 | 1

NO.OF SHEETS 1/1

DEVIATION FOR NON - TOLERANCED DIMENSIONS (IS : 2102 - MEDIUM)													
ABOVE	0.5	6	30	120	315	1000	2000	ABOVE & UP TO	0.5 - 6	6 - 30	30 - 120	120 - 400	
UP TO	6	30	120	315	1000	2000		TOL.	± 1°	± 30'	± 20'	± 10'	
TOL.	±0.1	±0.2	±0.3	±0.5	±0.8	±1.2							

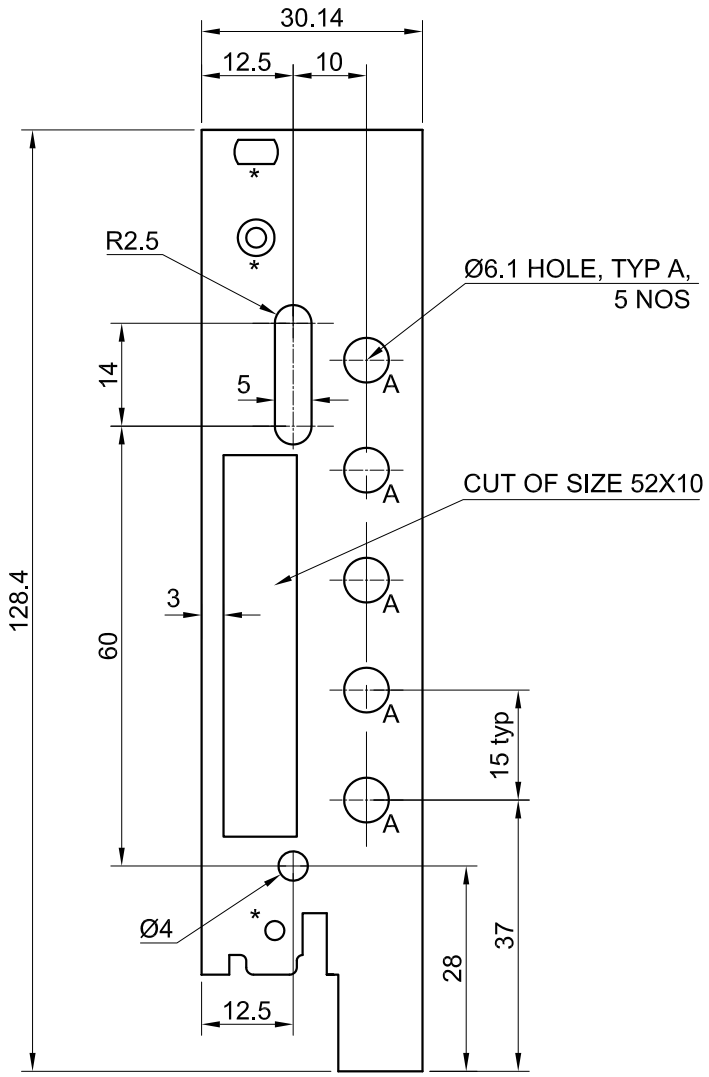

MODIFICATION DETAILS
FRONT VIEW

* EXISTING HOLES

REV	CN.NO.	DATE	DESCRIPTION	ENGINEER	APPROVED	NUMBER	ITEM	QTY
4								
3								
2								
1								
0		16/03/13	ORIGINAL			DSA 36 109 0 101	-	1

MATERIAL	FINISH	PROJ.	NEXT ASSEMBLY	
STD FACIA,20848-587 SCHROFF	-		TOL.GEN. ± - TOL.AXIS. ± -	PRJ. SP-109

DRAWN	CHECKED	ENGINEER	DIMNS	SCALE	TITLE
Shakkir			mm	NTS	FACIA PANEL-2 MODIFICATION (PRE AMPLIFIER)
DATE 16/03/13	DATE	DATE 16/03/13	DOC CODE		

KERALA STATE ELECTRONICS DEVELOPMENT CORPORATION LIMITED.

DRG. NUMBER: DPD 36 109 0 016

SIZE	ISSUE
A4	1
NO.OF SHEETS	1 / 1

--

DEVIATION FOR NON - TOLERANCED DIMENSIONS (IS : 2102 - MEDIUM)													
ABOVE	0.5	6	30	120	315	1000	2000	ABOVE & UP TO	0.5 - 6	6 - 30	30 - 120	120 - 400	
UP TO	6	30	120	315	1000	2000		TOL.	± 1°	± 30'	± 20'	± 10'	
TOL.	±0.1	±0.2	±0.3	±0.5	±0.8	±1.2							

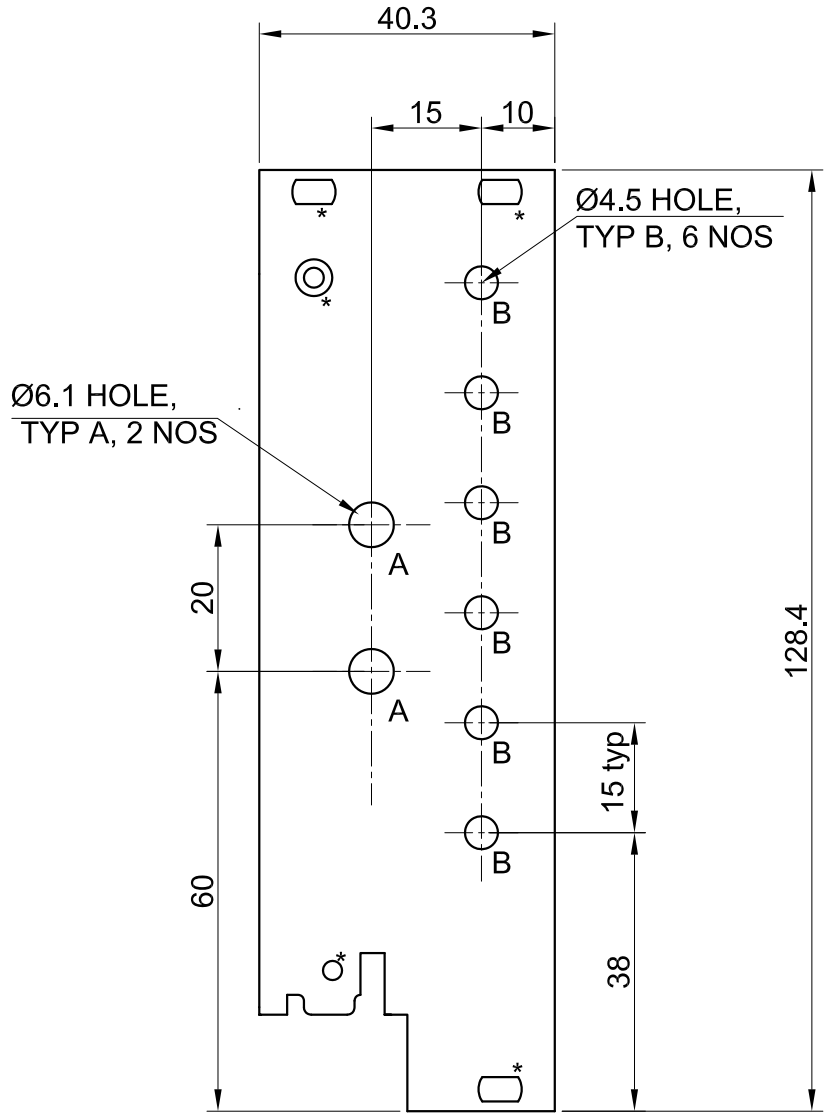

FABRICATION DETAILS
(FRONT VIEW)

* EXISTING HOLES

REV	CN.NO.	DATE	DESCRIPTION	ENGINEER	APPROVED	NUMBER	ITEM	QTY
4								
3								
2								
1								
0		16/03/13	ORIGINAL			DSA 36 109 0 102	-	1

MATERIAL: STD FACIA,20848-589 SCHROFF	FINISH: -	PROJ.	NEXT ASSEMBLY		
			TOL.GEN. ± -	PRJ. SP-109	
			TOL.AXIS. ± -		

DRAWN	CHECKED	ENGINEER	DIMNS	SCALE	TITLE
Shakkir			mm	NTS	FACIA PANEL-3 MODIFICATION (TR SWITCH)
DATE 16/03/13	DATE	DATE 16/03/13	DOC CODE	DRG. NUMBER	SIZE / ISSUE
KERALA STATE ELECTRONICS DEVELOPMENT CORPORATION LIMITED.				DPD 36 109 0 017	A4 / 1
					NO.OF SHEETS 1/1

--

RESTRICTED

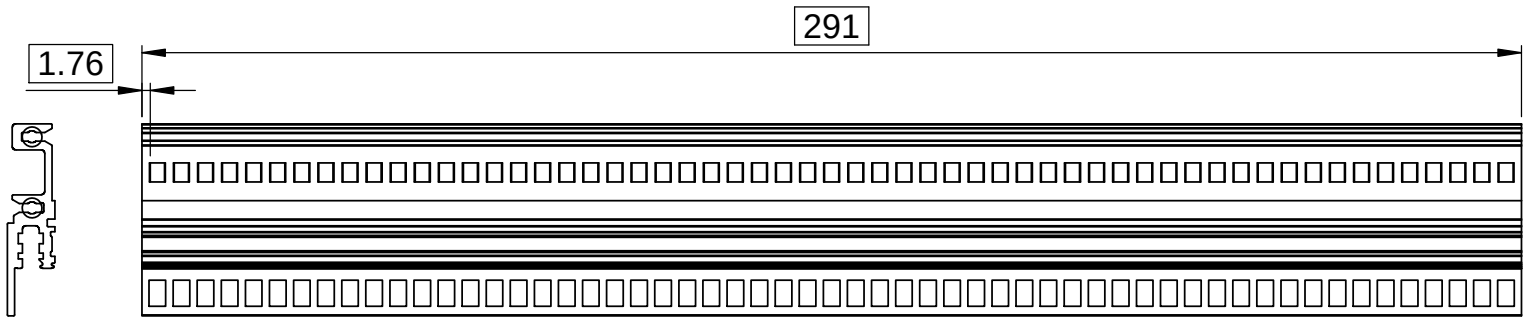

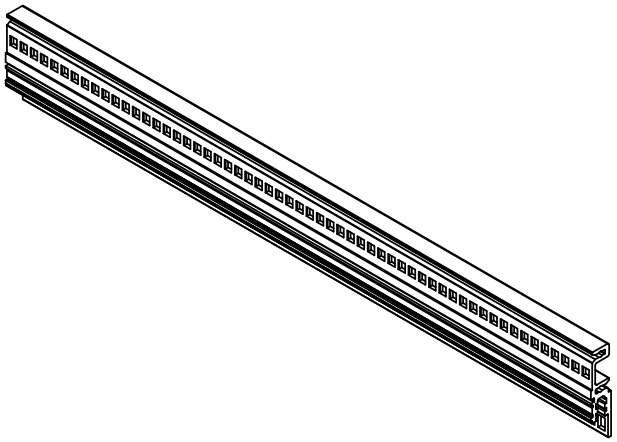

NOTE:

AVOID SHARP EDGES AND CORNERS

REV	CN.NO.	DATE	DESCRIPTION	CHECKED	APPROVED	NEXT ASSEMBLY	ITEM	QTY
4								
3								
2								
1								
0		19.08.17	ORIGINAL			DSA 36 109 0 012	36	1

MATERIAL	FINISH	PROJ.	TOL.GEN. ± IS: 2102 TOL.AXIS. ± (MED.)	PRJ.
STANDARD PROFILE SCHROFF PART NO:34560-363	-			109

DRAWN	CHECKED	APPROVED	DIMNS	SCALE	TITLE
MALIKSAD			mm	NTS	FRONT BOTTOM PROFILE
DATE 19.08.17	DATE	DATE	DRG. NUMBER		SIZE A4 / ISSUE 1
KERALA STATE ELECTRONICS DEVELOPMENT CORPORATION LIMITED			DPD 36 109 0 230		NO.OF SHEETS 1 / 1

RESTRICTED

RESTRICTED

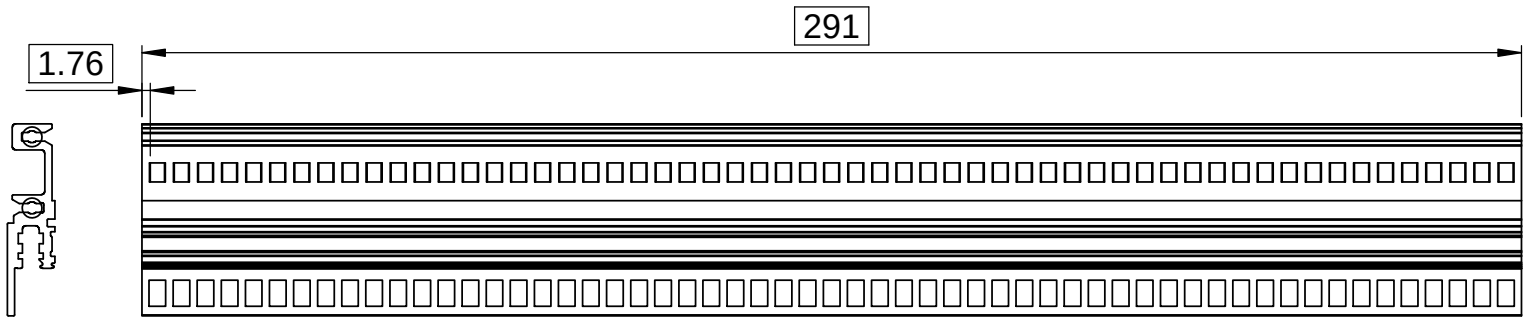

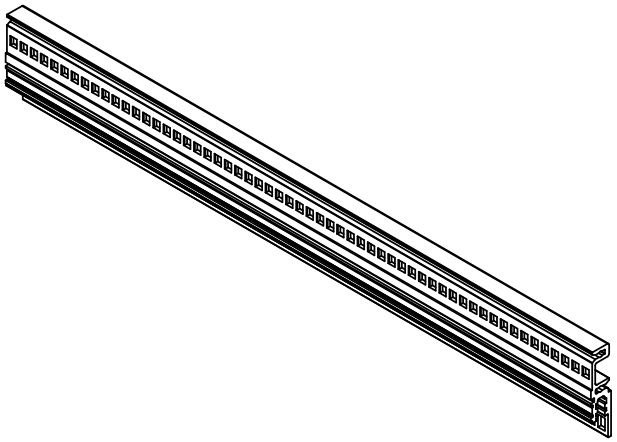

NOTE:

AVOID SHARP EDGES AND CORNERS

REV	CN.NO.	DATE	DESCRIPTION	CHECKED	APPROVED	NEXT ASSEMBLY	ITEM	QTY
4								
3								
2								
1								
0		19.08.17	ORIGINAL			DSA 36 109 0 013	31	1

MATERIAL	FINISH	PROJ.		PRJ.
STANDARD PROFILE SCHROFF PART NO:34560-363	-		TOL.GEN. ± IS: 2102 TOL.AXIS. ± (MED.)	109

DRAWN	CHECKED	APPROVED	DIMNS	SCALE	TITLE
MALIKSAD			mm	NTS	FRONT BOTTOM PROFILE
DATE 19.08.17	DATE	DATE	DRG. NUMBER		SIZE A4 / ISSUE 1
KERALA STATE ELECTRONICS DEVELOPMENT CORPORATION LIMITED			DPD 36 109 0 229		NO.OF SHEETS 1 / 1

RESTRICTED

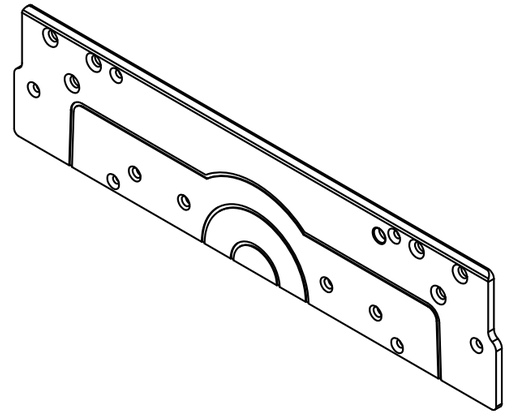

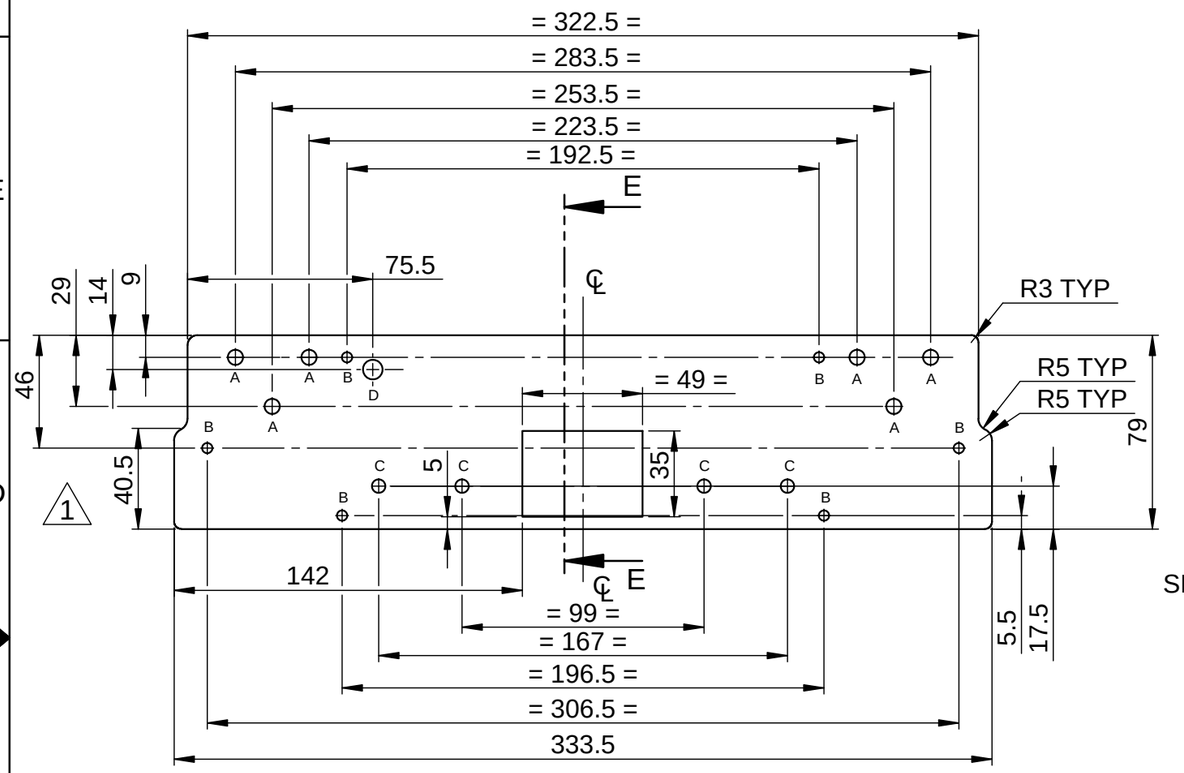

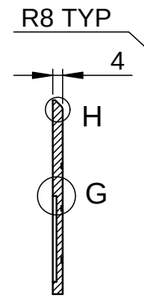

SECTION E-E

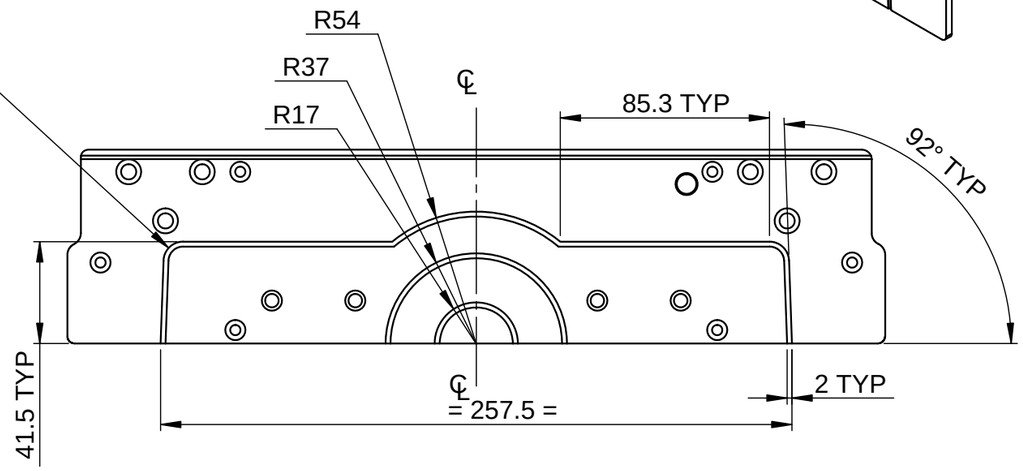

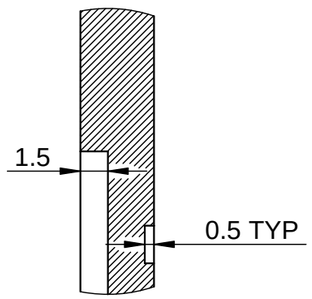

DETAIL G

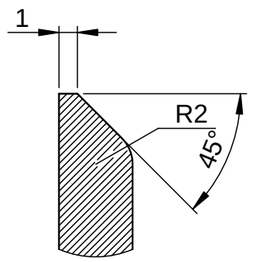

DETAIL H

SL NO	REF	DESCRIPTION	QTY
1	A	∅6.2 ⌵ ∅10.2	6
2	B	∅4.2 ⌵ ∅8.2	6
3	C	∅5.5 ⌵ ∅8.2	4
4	D	∅8	1

NOTE:

1. AVOID SHARP EDGES AND CORNERS.
2. DIMENSIONLESS FEATURES TO BE MEASURED FROM IGS

REV	CN.NO.	DATE	DESCRIPTION	CHECKED	APPROVED	NEXT ASSEMBLY	ITEM	QTY
4								
3								
2								
1		22.08.19	REVISED					
0		09.06.17	ORIGINAL			DSA 36 109 0 022	7	1

MATERIAL: ALUMINIUM HE-30	FINISH: YELLOW CC COATING	PROJ.	TOL.GEN. ± IS:2102 TOL.AXIS. ± (MED)	PRJ. 109	
DRAWN: MALIKSAD	CHECKED	APPROVED	DIMNS: mm / SCALE: NTS	TITLE: FRONT INTERMEDIATE PLATE	
DATE 22.08.19	DATE	DATE	DRG. NUMBER: DPD 36 109 0 106	SIZE: A3	ISSUE: 1
KERALA STATE ELECTRONICS DEVELOPMENT CORPORATION LIMITED.				NO.OF SHEETS: 1 / 1	

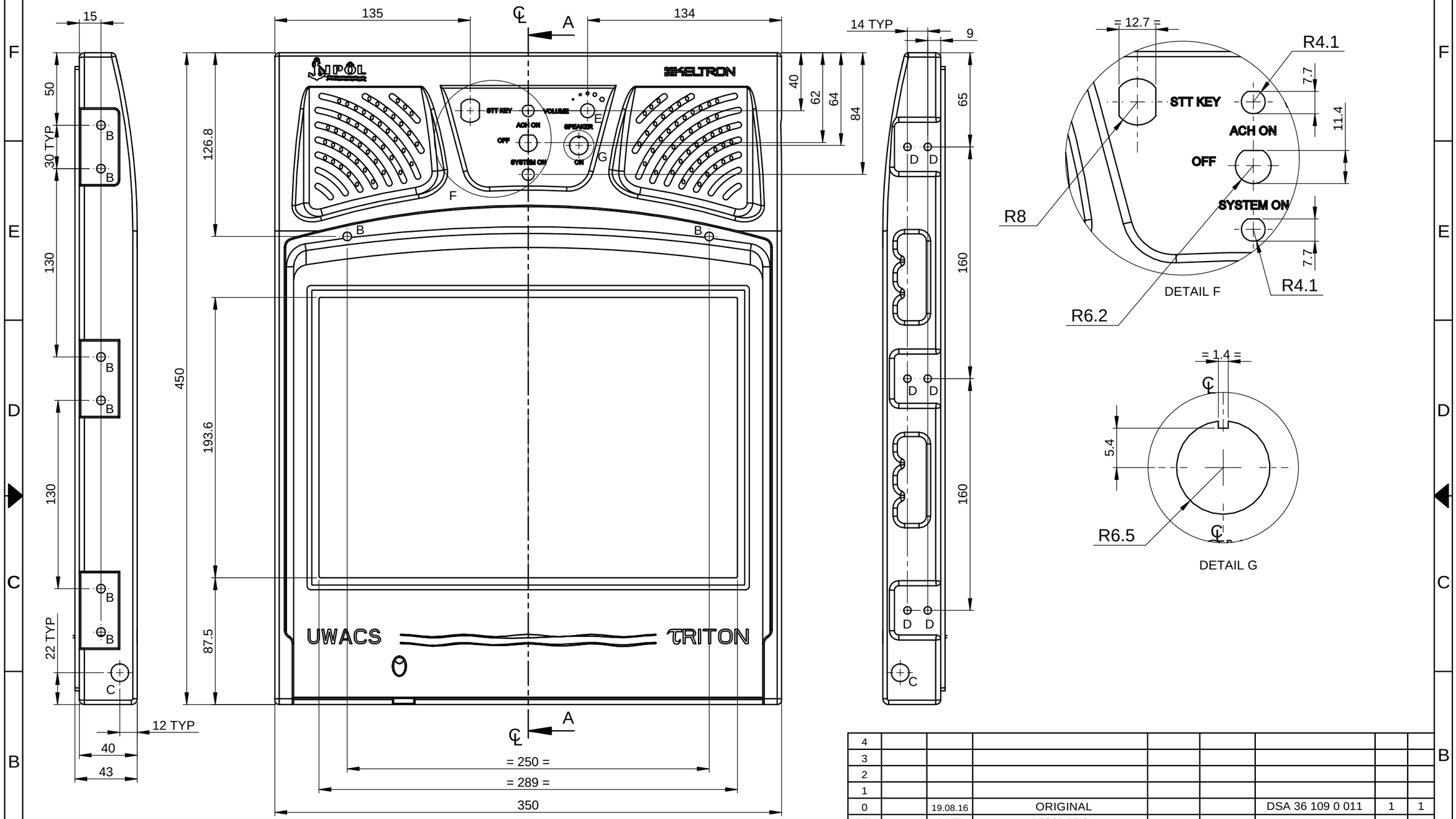

NOTE

1. AVOID SHARP CORNERS AND EDGES
2. ALL BURRS MUST BE REMOVED
3. DIMENSIONLESS FEATURES TO BE MEASURED FROM IGS FILE

REV	CN.NO.	DATE	DESCRIPTION	CHECKED	APPROVED	NEXT ASSEMBLY	ITEM	QTY
4								
3								
2								
1								
0		19.08.16	ORIGINAL			DSA 36 109 0 011	1	1

MATERIAL: ALUMINIUM HE-30	FINISH: YELLOW CC COATING	PROJ.	TOL.GEN. ± IS:2102 TOL.AXIS. ± (MED)	PRJ. 109	
DRAWN: MALIKSAD	CHECKED	APPROVED	DIMNS: mm	SCALE: NTS	TITLE: FRONT PLATE
DATE 19.08.16	DATE	DATE	DRG. NUMBER: DPD 36 109 0 114	SIZE: A3	ISSUE: 1
KERALA STATE ELECTRONICS DEVELOPMENT CORPORATION LIMITED.				NO.OF SHEETS: 1 / 3	

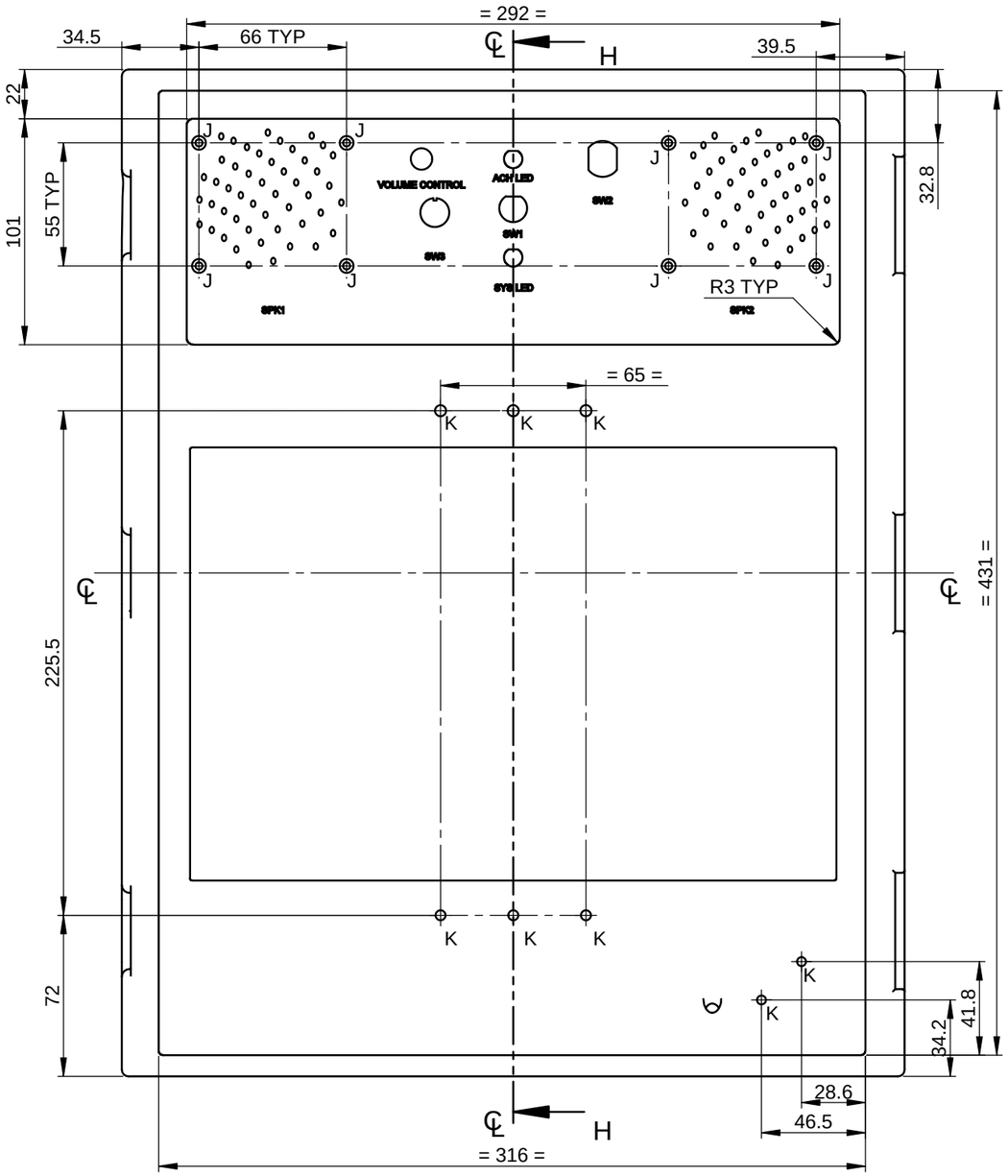

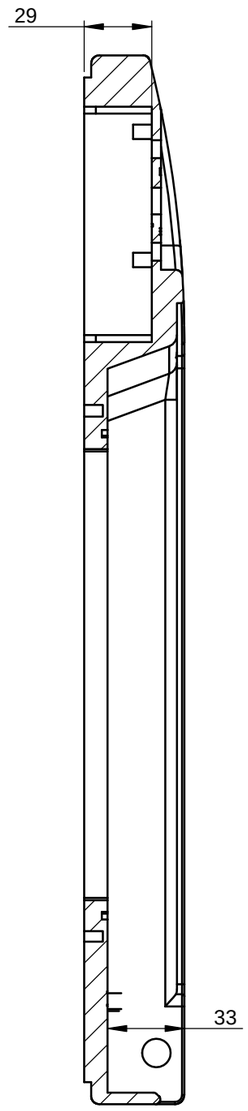

SECTION H-H

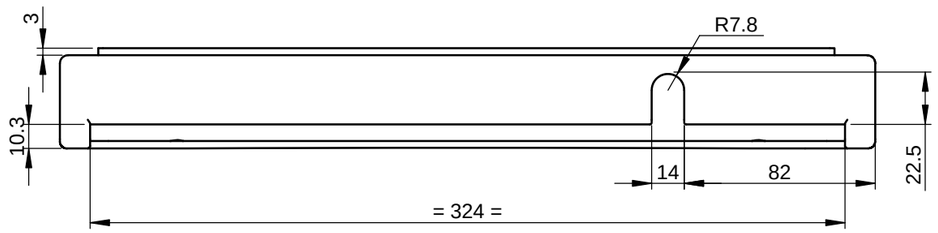

SL NO	REF	DESCRIPTION	QTY
1	B	DRILL ∅6.2↧14, M6 HELICOIL TAP	8
2	C	∅12.2	2
5	D	DRILL ∅5.2↧10, M5 HELICOIL TAP	6
6	E	∅9.6	1
7	J	DRILL ∅3.1↧8, M3 HELICOIL TAP	8
8	K	DRILL ∅4.1↧8, M4 HELICOIL TAP	8

REV	CN.NO.	DATE	DESCRIPTION	CHECKED	APPROVED	NEXT ASSEMBLY	ITEM	QTY
4								
3								
2								
1								
0		19.08.16	ORIGINAL			DSA 36 109 0 011	1	1

MATERIAL: ALUMINIUM HE-30	FINISH: YELLOW CC COATING	PROJ.	TOL.GEN. ± IS:2102 TOL.AXIS. ± (MED)	PRJ. 109	
DRAWN: MALIKSAD	CHECKED	APPROVED	DIMNS: mm	SCALE: NTS	TITLE: FRONT PLATE
DATE 19.08.16	DATE	DATE			

KERALA STATE ELECTRONICS DEVELOPMENT CORPORATION LIMITED.

DRG. NUMBER: DPD 36 109 0 114

SIZE	ISSUE
A3	1
NO.OF SHEETS	2 / 3

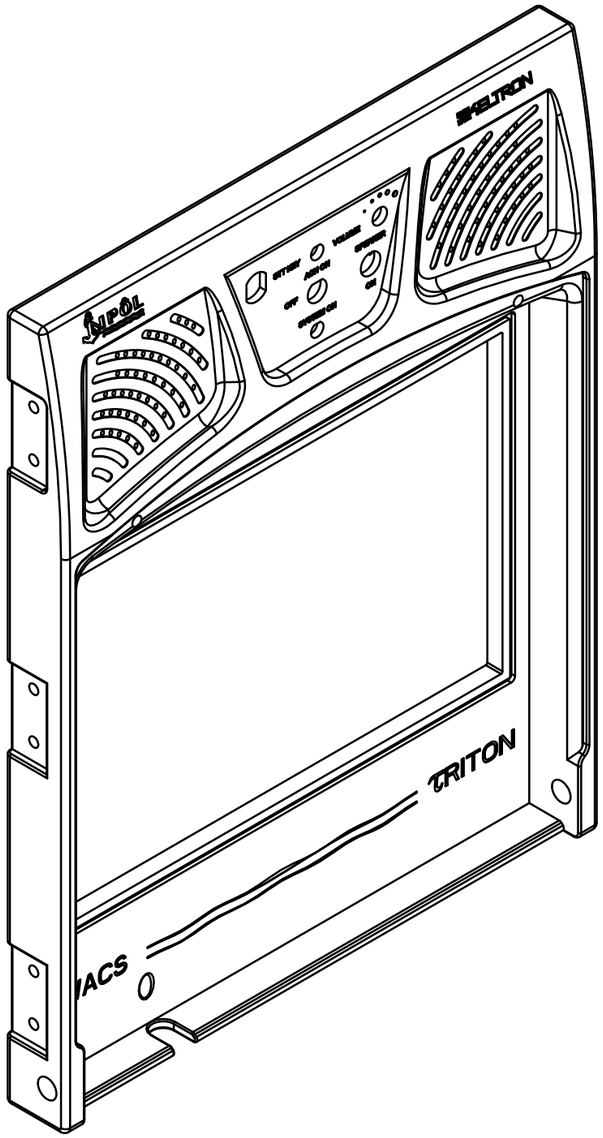

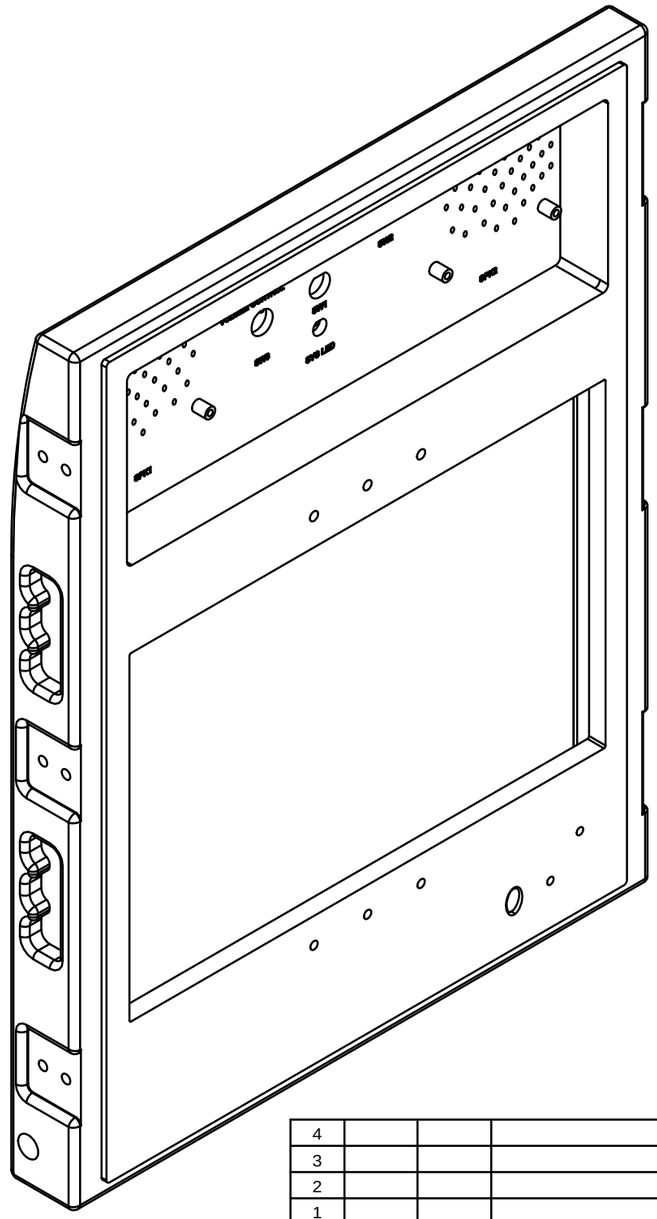

4								
3								
2								
1								
0		19.08.16	ORIGINAL			DSA 36 109 0 011	1	1
REV	CN.NO.	DATE	DESCRIPTION	CHECKED	APPROVED	NEXT ASSEMBLY	ITEM	QTY

MATERIAL: ALUMINIUMHE-30	FINISH: YELLOW CC COATING	PROJ.	TOL.GEN. ± IS:2102 TOL.AXIS. ± (MED)	PRJ. 109		
DRAWN: MALIKSAD	CHECKED	APPROVED	DIMNS: mm	SCALE: NTS	TITLE: FRONT PLATE	
DATE 19.08.16	DATE	DATE				
KERALA STATE ELECTRONICS DEVELOPMENT CORPORATION LIMITED.			DRG. NUMBER: DPD 36 109 0 114		SIZE: A3	ISSUE: 1
					NO.OF SHEETS: 3 / 3	

RESTRICTED

RESTRICTED

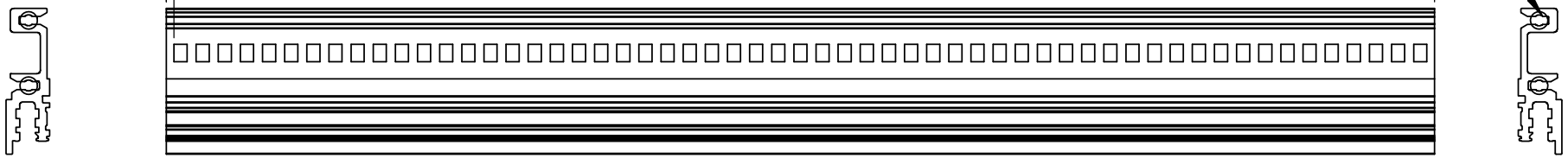

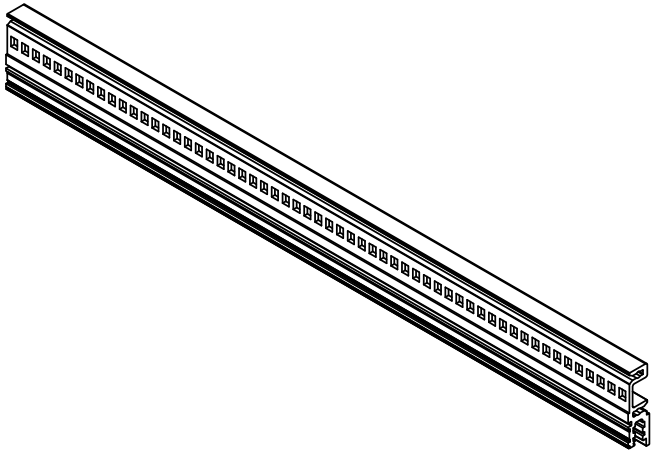

NOTE:

AVOID SHARP EDGES AND CORNERS

REV	CN.NO.	DATE	DESCRIPTION	CHECKED	APPROVED	NEXT ASSEMBLY	ITEM	QTY
4								
3								
2								
1								
0		19.08.17	ORIGINAL			DSA 36 109 0 012	9	1

MATERIAL: STANDARD PROFILE SCHROFF PART NO:34560-263	FINISH: -	PROJ.	TOL.GEN. ± IS: 2102 TOL.AXIS. ± (MED.)	PRJ. 109	
DRAWN: MALIKSAD	CHECKED	APPROVED	DIMNS: mm / SCALE: NTS	TITLE: FRONT TOP PROFILE	
DATE: 19.08.17	DATE	DATE	DRG. NUMBER: DPD 36 109 0 231	SIZE: A4	ISSUE: 1
KERALA STATE ELECTRONICS DEVELOPMENT CORPORATION LIMITED				NO.OF SHEETS: 1 / 1	

RESTRICTED

RESTRICTED

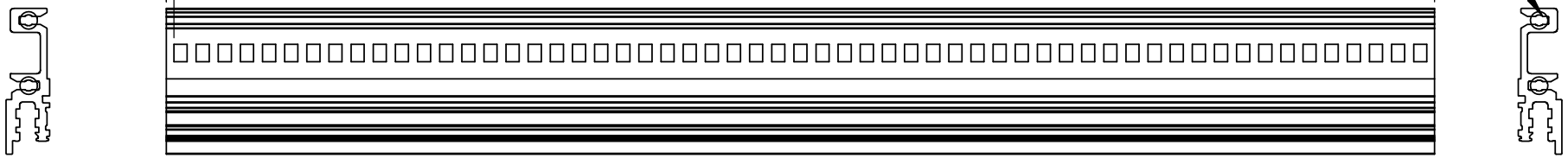

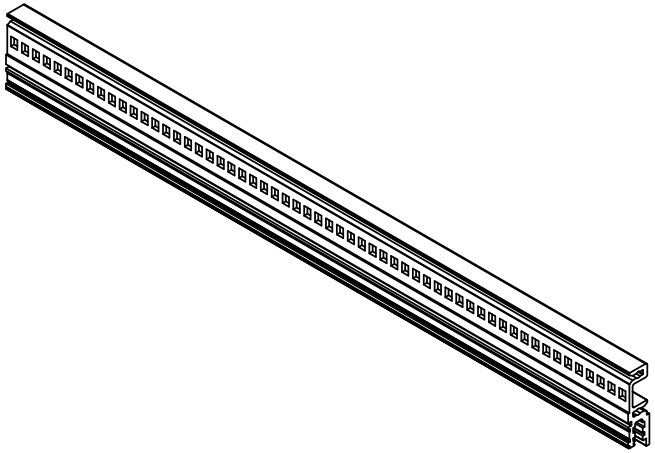

NOTE:

AVOID SHARP EDGES AND CORNERS

REV	CN.NO.	DATE	DESCRIPTION	CHECKED	APPROVED	NEXT ASSEMBLY	ITEM	QTY
4								
3								
2								
1								
0		19.08.17	ORIGINAL			DSA 36 109 0 013	8	1

MATERIAL	FINISH	PROJ.		PRJ.
STANDARD PROFILE SCHROFF PART NO:34560-263	-		TOL.GEN. ± IS: 2102 TOL.AXIS. ± (MED.)	109

DRAWN	CHECKED	APPROVED	DIMNS	SCALE	TITLE
MALIKSAD			mm	NTS	FRONT TOP PROFILE
DATE 19.08.17	DATE	DATE	DRG. NUMBER		SIZE: A4 / ISSUE: 1
KERALA STATE ELECTRONICS DEVELOPMENT CORPORATION LIMITED			DPD 36 109 0 228		NO.OF SHEETS: 1 / 1

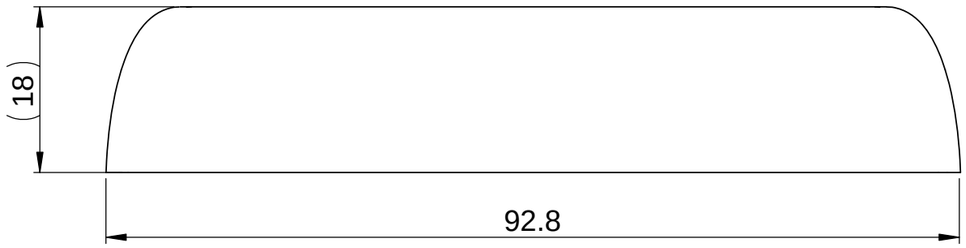

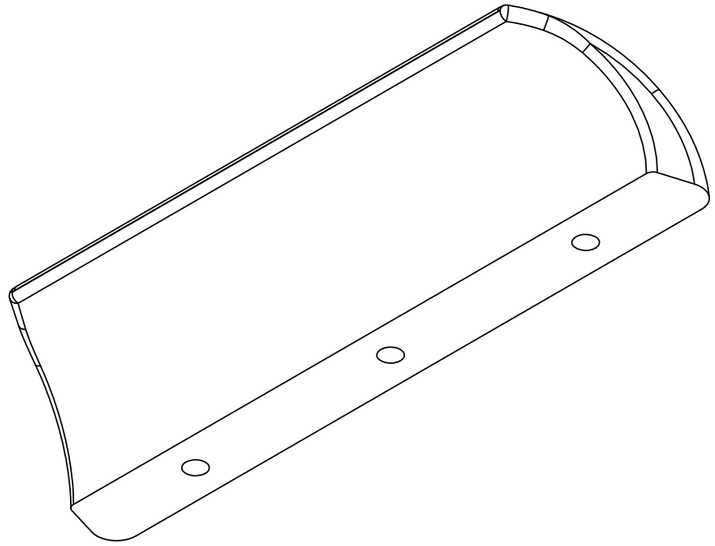

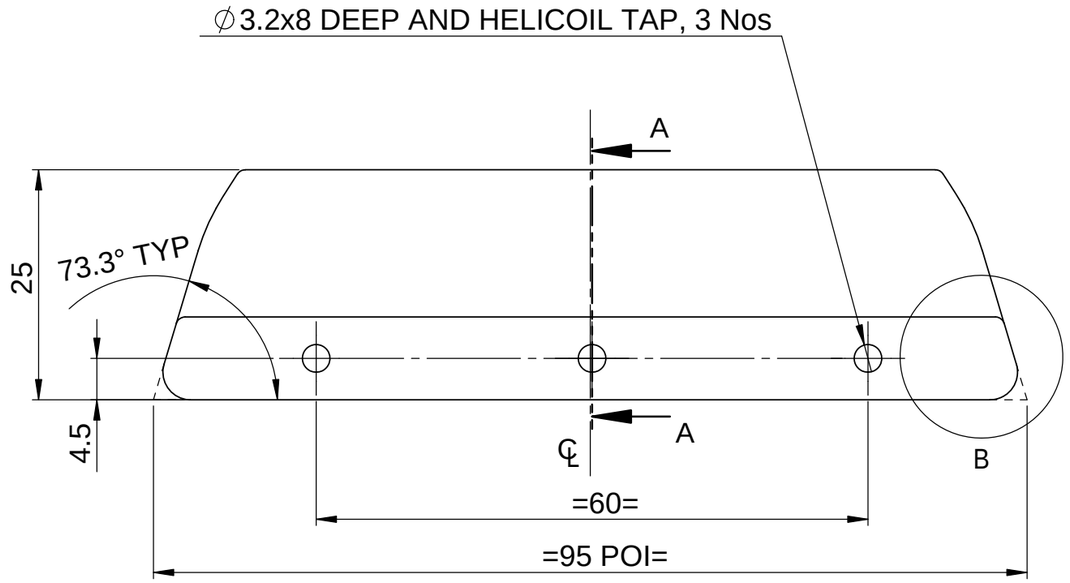

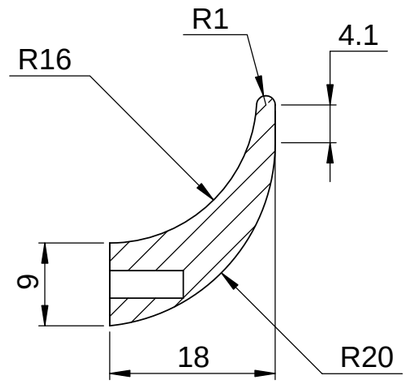

SECTION A-A

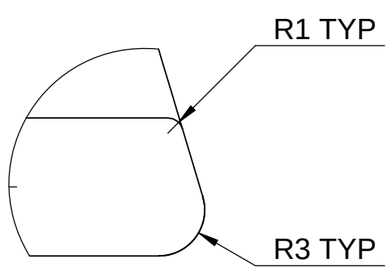

DETAIL B

NOTE

1. AVOID SHARP CORNERS AND EDGES
2. ALL BURRS MUST BE REMOVED

REV	CN.NO.	DATE	DESCRIPTION	CHECKED	APPROVED	NEXT ASSEMBLY	ITEM	QTY
4								
3								
2								
1								
0		04.08.16	ORIGINAL			DSA 36 109 0 022	6	1

MATERIAL: ALUMINIUM HE-30	FINISH: CC COATING	PROJ.	TOL.GEN. ± IS:2102 TOL.AXIS. ± (MED)	PRJ. 109	
DRAWN: THUSHANTH	CHECKED	APPROVED	DIMNS: mm	SCALE: NTS	TITLE: HANDLE
DATE: 04.08.16	DATE	DATE	DRG. NUMBER: DPD 36 109 0 107	SIZE: A3	ISSUE: 1
KERALA STATE ELECTRONICS DEVELOPMENT CORPORATION LIMITED				NO.OF SHEETS: 1 / 1	

RESTRICTED

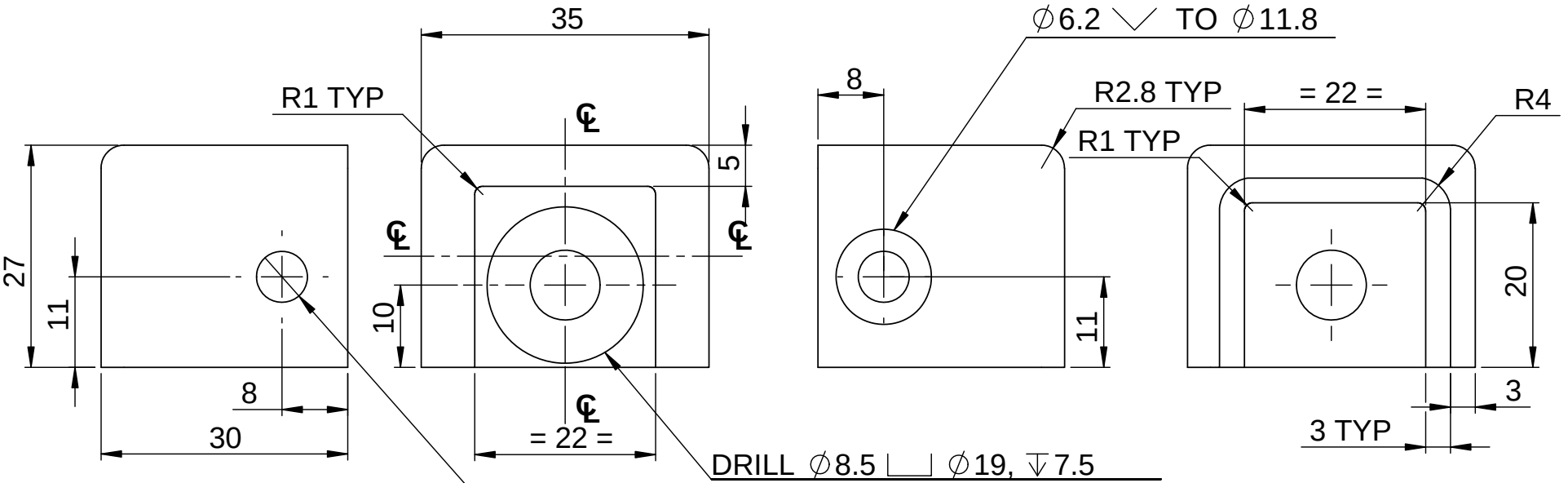

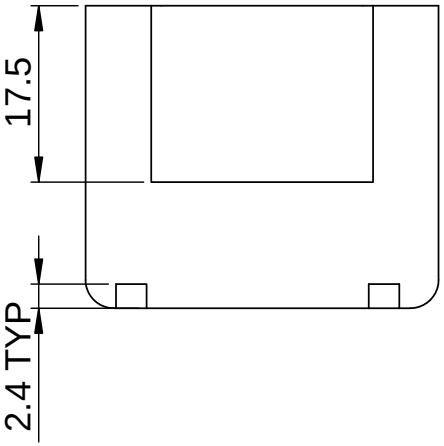

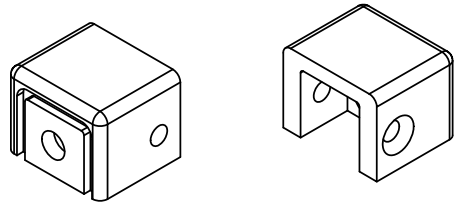

NOTE:

AVOID SHARP EDGES AND CORNERS

REV	CN.NO.	DATE	DESCRIPTION	CHECKED	APPROVED	NEXT ASSEMBLY	ITEM	QTY
4								
3								
2								
1						DSA 36 109 0 015	7	1
0		29.08.17	ORIGINAL			DSA 36 109 0 019	18	1

MATERIAL: ALUMINIUM HE-30	FINISH: YELLOW CC CAOTING	PROJ.	TOL.GEN. ± IS: 2102 TOL.AXIS. ± (MED.)	PRJ. 109

DRAWN	CHECKED	APPROVED	DIMNS	SCALE	TITLE
MALIKSAD			mm	NTS	HANDLE HOLDER-2
DATE 29.08.17	DATE	DATE	DRG. NUMBER		SIZE A4 / ISSUE 1
KERALA STATE ELECTRONICS DEVELOPMENT CORPORATION LIMITED			DPD 36 109 0 047		NO.OF SHEETS 1 / 1

RESTRICTED

RESTRICTED

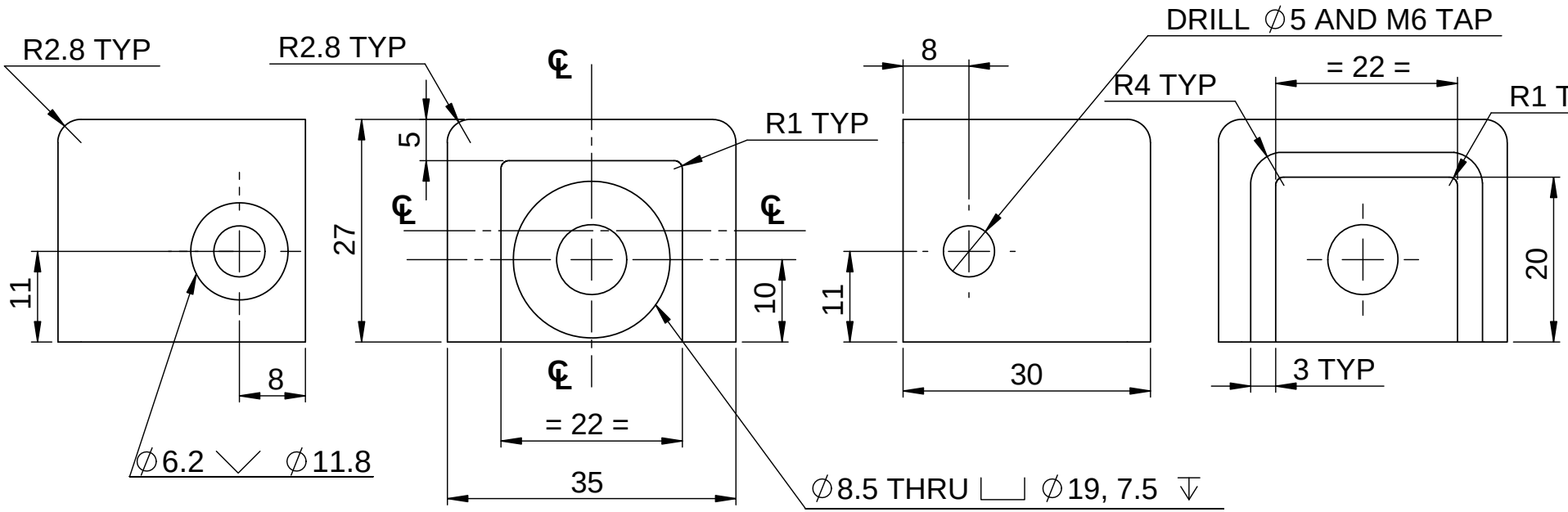

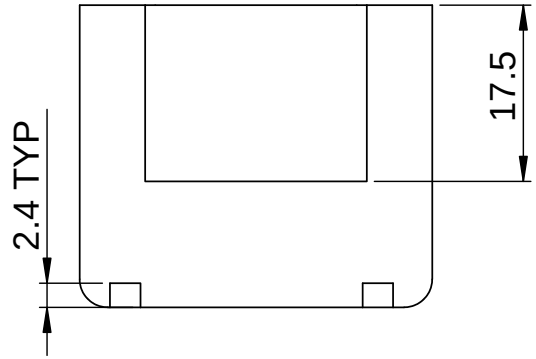

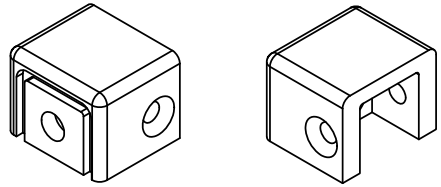

NOTE:

AVOID SHARP EDGES AND CORNERS

REV	CN.NO.	DATE	DESCRIPTION	CHECKED	APPROVED	NEXT ASSEMBLY	ITEM	QTY
4								
3								
2								
1						DSA 36 109 0 015	7	1
0		29.08.17	ORIGINAL			DSA 36 109 0 019	18	1

MATERIAL	FINISH	PROJ.		PRJ.
ALUMINIUM HE-30	YELLOW CC CAOTING		TOL.GEN. ± IS: 2102 TOL.AXIS. ± (MED.)	109

DRAWN	CHECKED	APPROVED	DIMNS	SCALE	TITLE
MALIKSAD			mm	NTS	HANDLE HOLDER-1
DATE 29.08.17	DATE	DATE	DRG. NUMBER		SIZE: A4 / ISSUE: 1
KERALA STATE ELECTRONICS DEVELOPMENT CORPORATION LIMITED			DPD 36 109 0 046		NO.OF SHEETS: 1 / 1

RESTRICTED

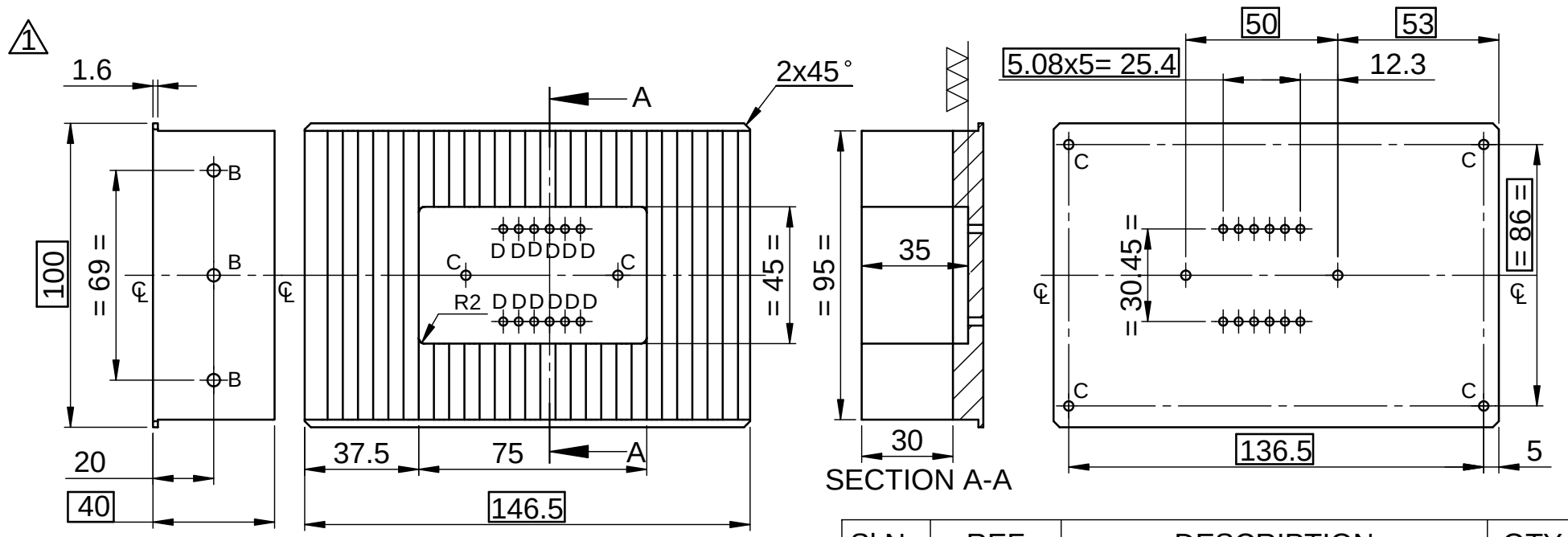

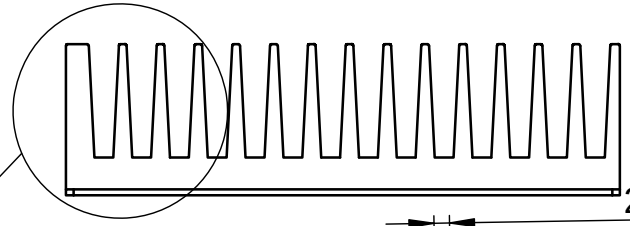

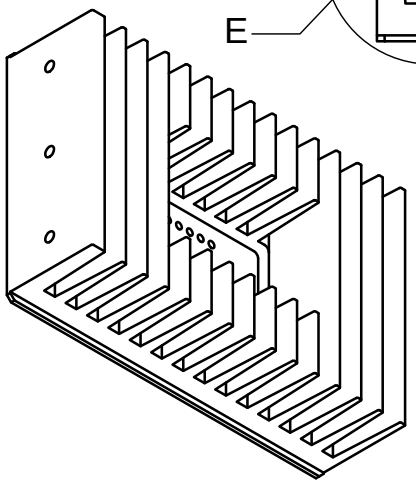

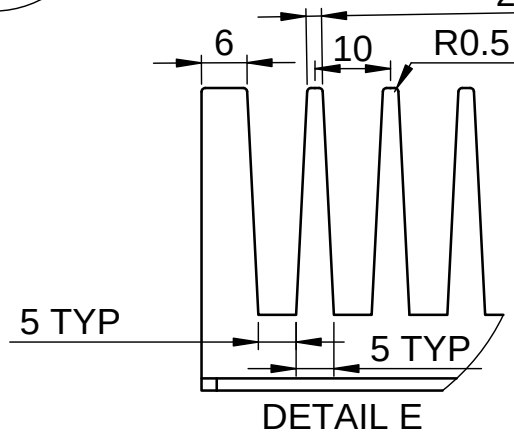

DETAIL E

Sl No	REF	DESCRIPTION	QTY
1	B	DRILL ∅4.1x5↧, M4 HELICOIL TAP	3
2	C	DRILL ∅3.1x5↧, M3 HELICOIL TAP	6
3	D	DRILL ∅2.7	12

REV	CN.NO.	DATE	DESCRIPTION	CHECKED	APPROVED	NEXT ASSEMBLY	ITEM	QTY
4								
3								
2								
1		02.01.20	REVISED					
0		25.03.13	ORIGINAL			-	-	-

MATERIAL: ALUMINIUM 6061-T6 / 6082-T6	FINISH: BLACK ANODISED	PROJ.	TOL.GEN. ± IS: 2102 TOL.AXIS. ± (MED.)	PRJ. 109	
DRAWN: MALIKSAD	CHECKED	APPROVED	DIMNS: mm	SCALE: NTS	TITLE: HEAT SINK SK85/100SA
DATE 02.01.20	DATE	DATE	DRG. NUMBER: DPD 36 109 0 001	SIZE: A4	ISSUE: 1
KERALA STATE ELECTRONICS DEVELOPMENT CORPORATION LIMITED				NO.OF SHEETS: 1 / 1	

RESTRICTED

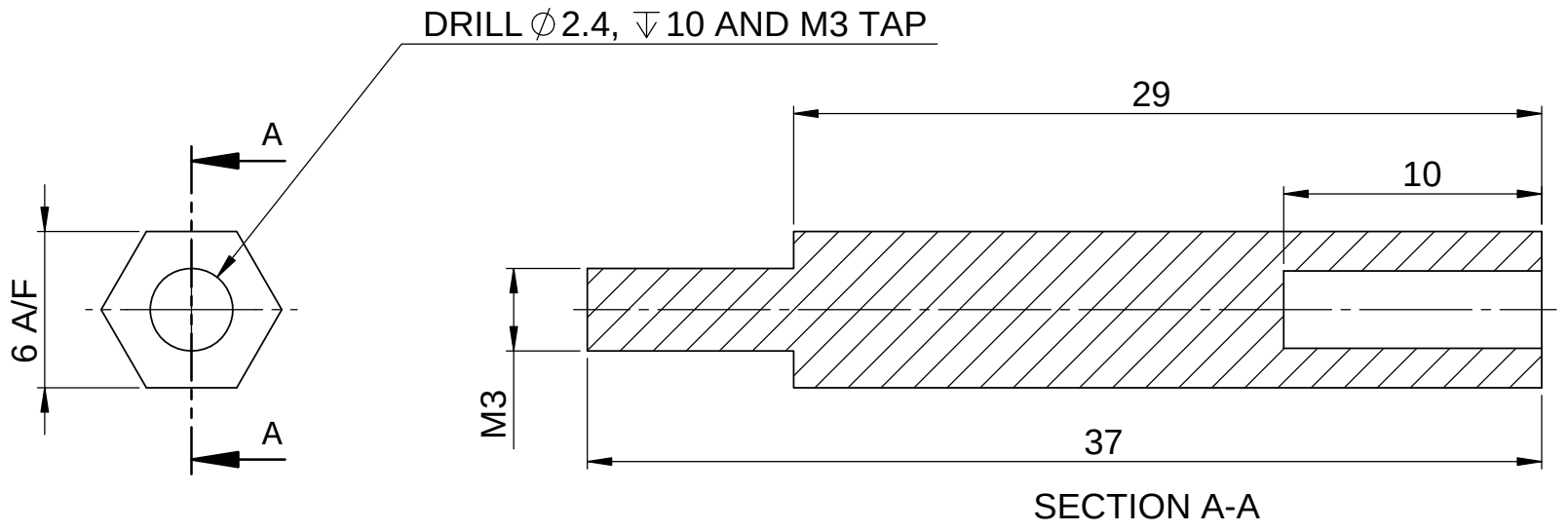

SECTION A-A

NOTE:

AVOID SHARP EDGES AND CORNERS

REV	CN.NO.	DATE	DESCRIPTION	CHECKED	APPROVED	NEXT ASSEMBLY	ITEM	QTY
4								
3								
2								
1								
0		29.07.17	ORIGINAL			DSA 36 109 0 011	10	04

MATERIAL: SS 316 HEXAGONAL ROD A/F 6mm	FINISH: --	PROJ.	TOL.GEN. ± IS: 2102 TOL.AXIS. ± (MED.)	PRJ. 109	
DRAWN: MALIKSAD	CHECKED	APPROVED	DIMNS: mm / SCALE: NTS	TITLE: HEX STUD	
DATE 29.07.17	DATE	DATE	DRG. NUMBER: DPD 36 109 0 068	SIZE: A4	ISSUE: 1
KERALA STATE ELECTRONICS DEVELOPMENT CORPORATION LIMITED				NO.OF SHEETS: 1 / 1	

RESTRICTED

RESTRICTED

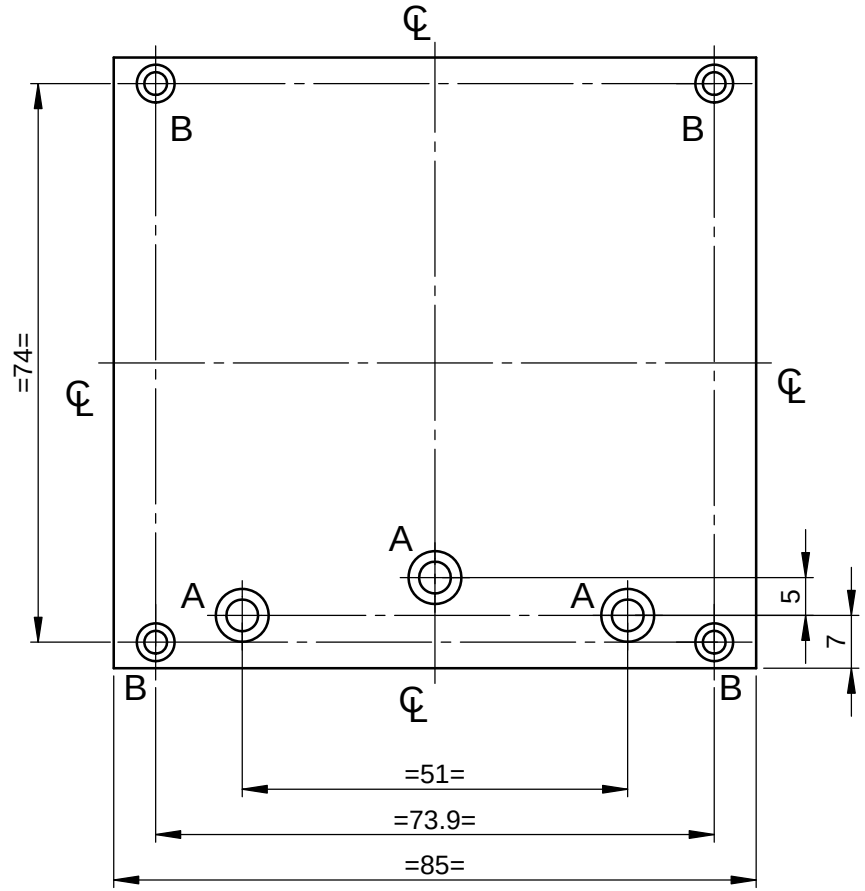

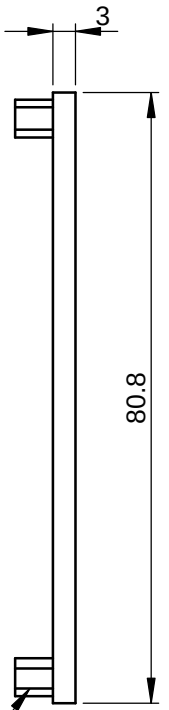

M3 RIVET NUT TO BE RIVETED ON
THE REAR SIDE OF HOLE'B'

NOTE:

1. AVOID SHARP EDGES AND CORNERS

SL NO	REF	DESCRIPTION	QTY
1	A	⌀4.2 ⌵ ⌀8.4	3
2	B	M3 RIVET NUT	4

REV	CN.NO.	DATE	DESCRIPTION	CHECKED	APPROVED	NEXT ASSEMBLY	ITEM	QTY
4								
3								
2								
1								
0		14.09.17	ORIGINAL			DSA 36 109 0 021	3	1

MATERIAL	FINISH	PROJ.	TOL.GEN. ± IS: 2102 TOL.AXIS. ± (MED.)	PRJ.
ALUMINIUM H32-5052	YELLOW CC COATING			109

DRAWN	CHECKED	APPROVED	DIMNS	SCALE	TITLE
MALIKSAD			mm	NTS	HMU FIXING PLATE
DATE 14.09.17	DATE	DATE	DRG. NUMBER		SIZE: A4 ISSUE: 1
KERALA STATE ELECTRONICS DEVELOPMENT CORPORATION LIMITED			DPD 36 109 0 048		NO.OF SHEETS: 1/1

RESTRICTED

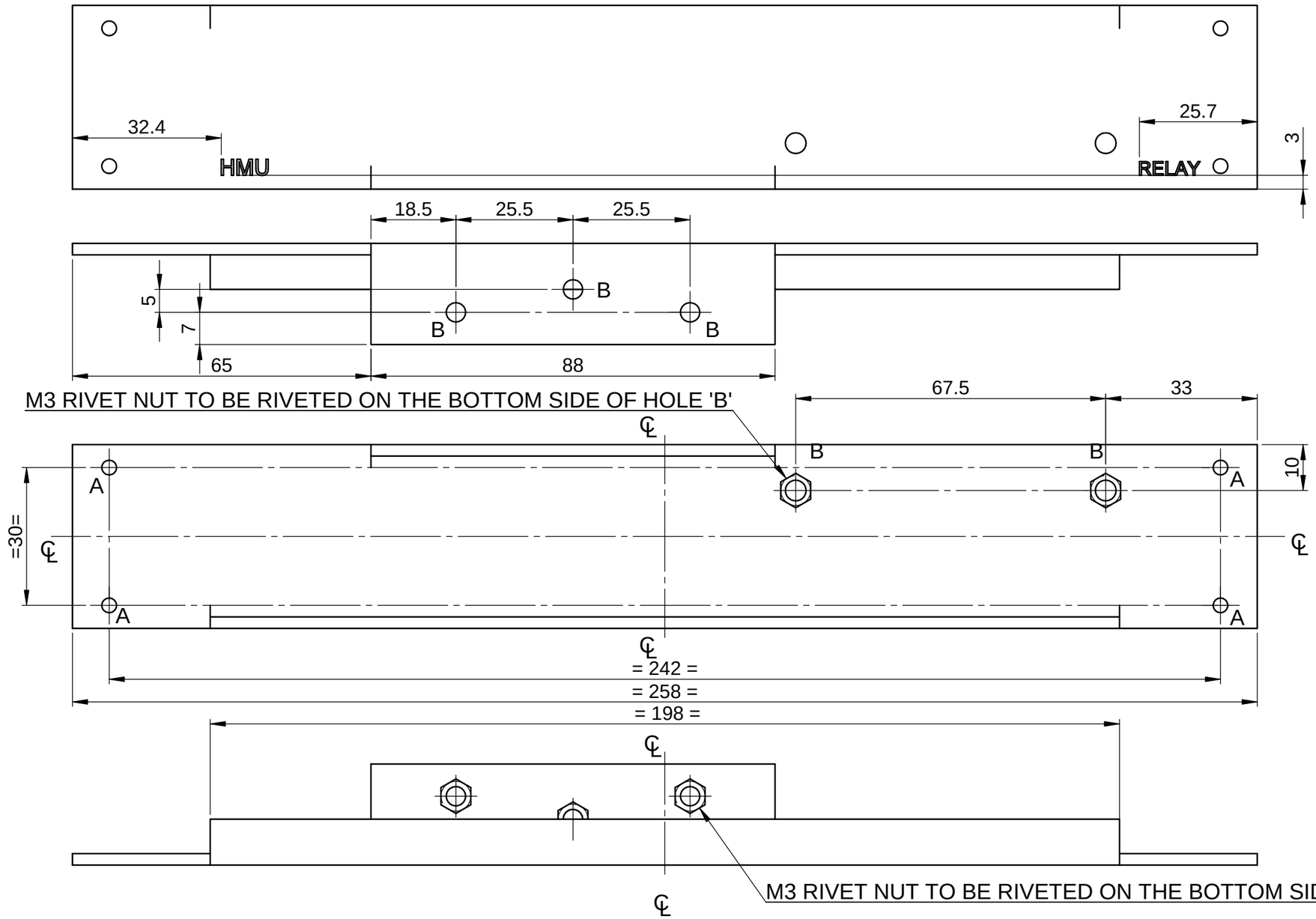

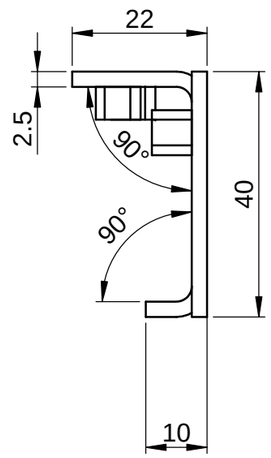

NOTE

1. AVOID SHARP CORNERS AND EDGES
2. 3x0.5⇩ TEXT TO BE ENGRAVED AND FILLED WITH BLACK PAINT

SL NO	REF	DESCRIPTION	QTY
1	A	∅4.2	4
2	B	M3 RIVET NUT	5

REV	CN.NO.	DATE	DESCRIPTION	CHECKED	APPROVED	NEXT ASSEMBLY	ITEM	QTY
4								
3								
2								
1								
0		19.08.17	ORIGINAL			DSA 36 109 0 021	5	1

MATERIAL	FINISH	PROJ.		PRJ.
ALUMINIUM H32-5052	YELLOW CC COATING		TOL.GEN. ± IS:2102 TOL.AXIS. ± (MED)	109

DRAWN	CHECKED	APPROVED	DIMNS	SCALE	TITLE
MALIKSAD			mm	NTS	HMU MOUNTING STRIP

DATE 19.08.17	DATE	DATE	DRG. NUMBER	SIZE	ISSUE
KERALA STATE ELECTRONICS DEVELOPMENT CORPORATION LIMITED			DPD 36 109 0 049	A3	1
				NO.OF SHEETS	1 / 1

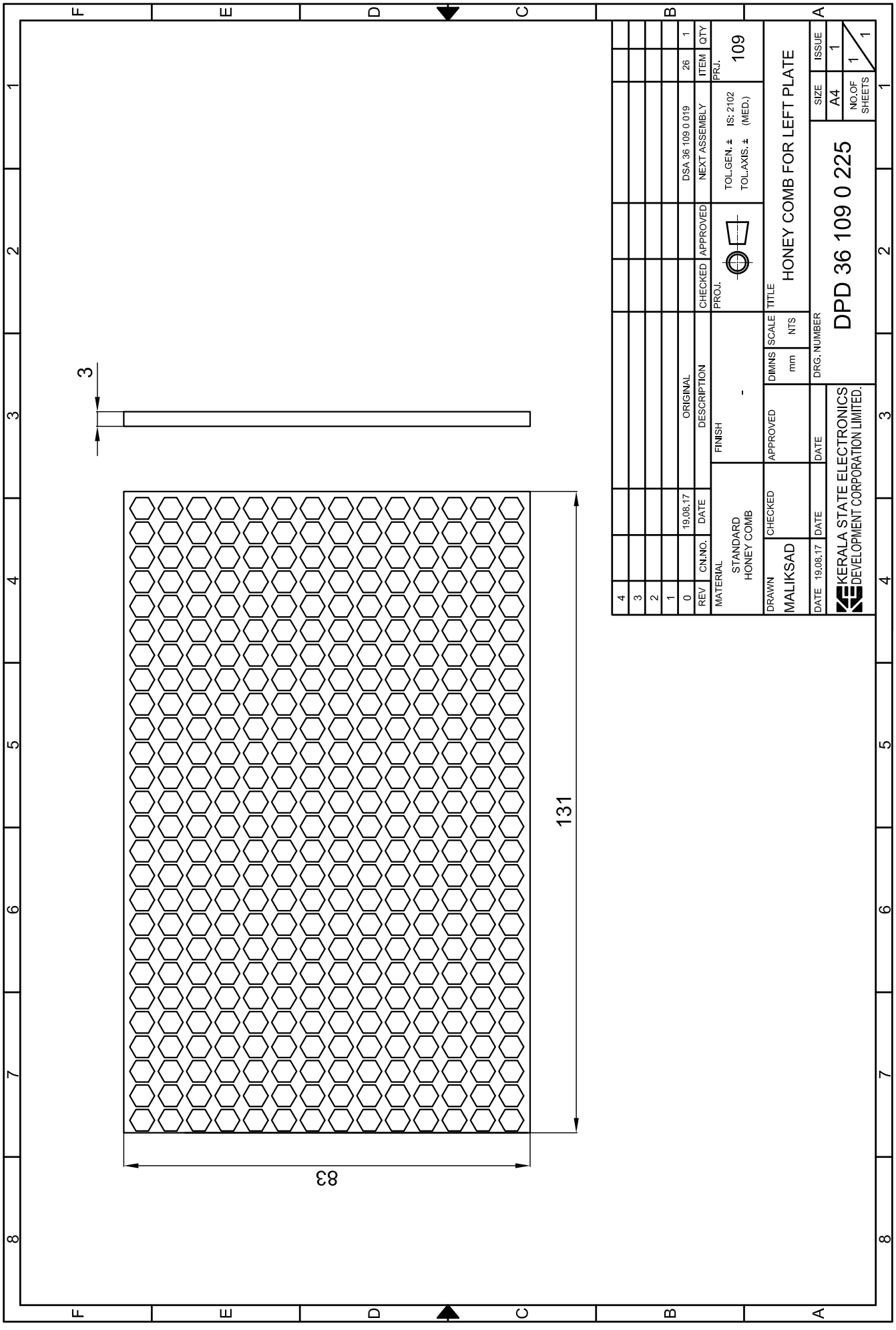
3
131
83
4
3
2
1
0
REV
CN.NO.
DATE
ORIGINAL
19.08.17
DESCRIPTION
CHECKED
APPROVED
DSA 36 109 0 019
26
NEXT ASSEMBLY
ITEM
1
QTY
PRJ.
109
TOL.GEN. ± IS: 2102
TOL.AXIS. ± (MED.)
PROJ.
MATERIAL
STANDARD
HONEY COMB
FINISH
-
DRAWN
MALIKSAD
DATE 19.08.17
CHECKED
DATE
APPROVED
DATE
DIMNS
mm
SCALE
NTS
TITLE
HONEY COMB FOR LEFT PLATE
DRG. NUMBER
DPD 36 109 0 225
KERALA STATE ELECTRONICS
DEVELOPMENT CORPORATION LIMITED.
SIZE
A4
ISSUE
1
NO.OF SHEETS
1
1

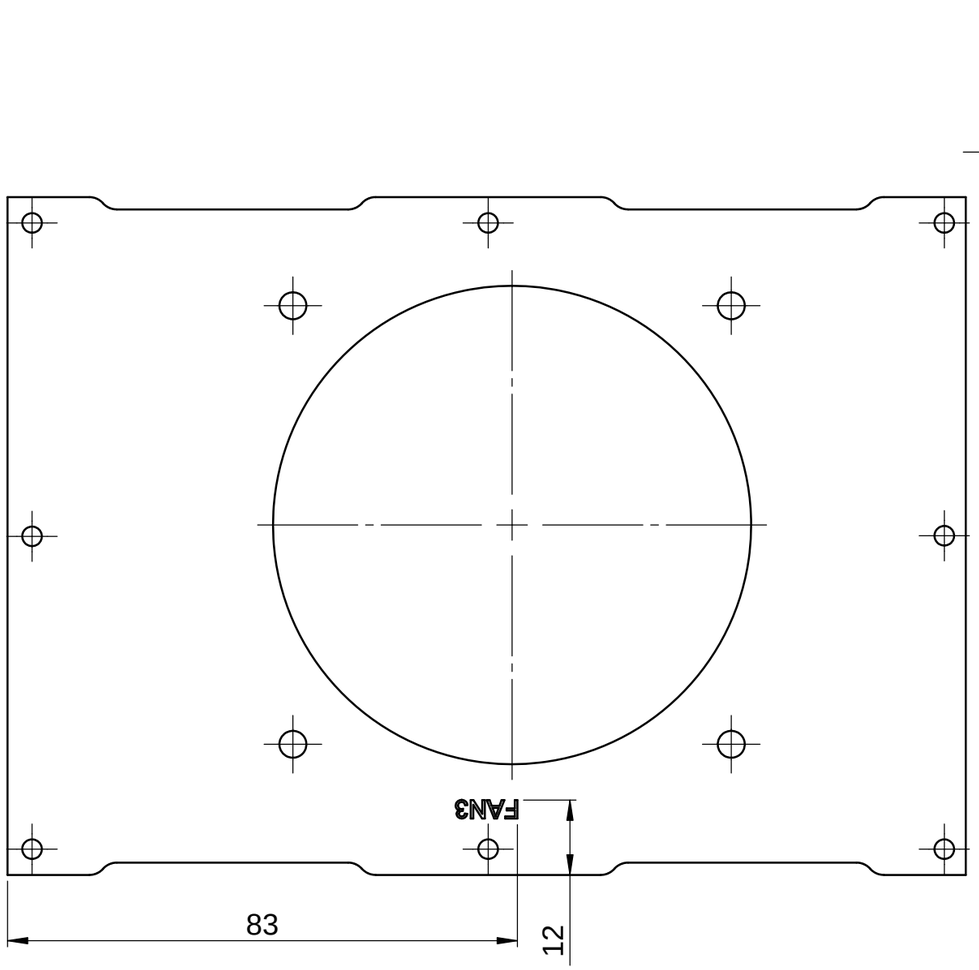

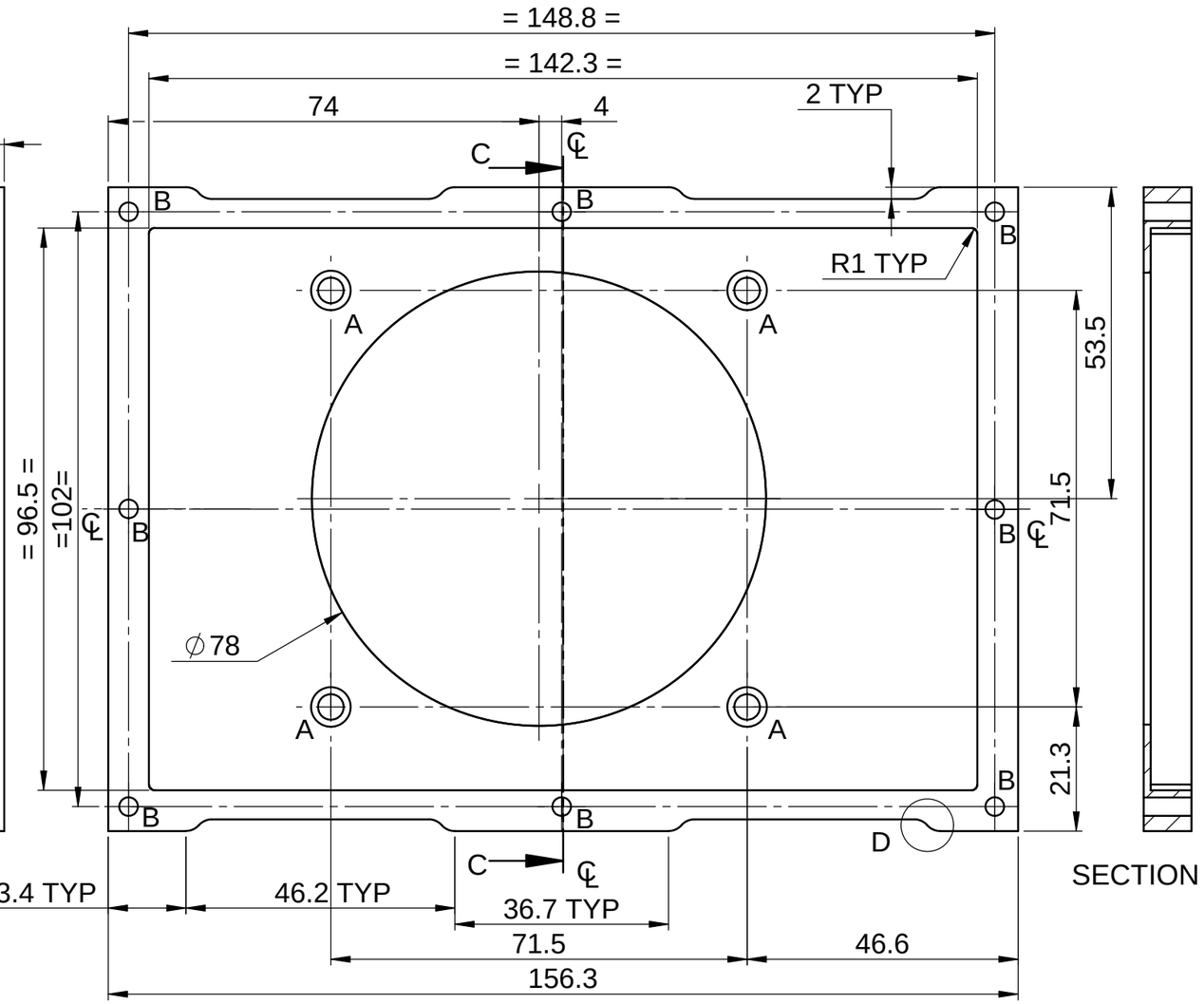

SECTION C-C

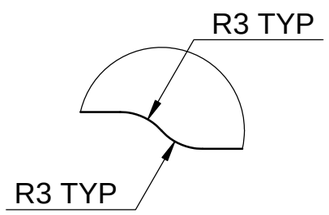

DETAIL D

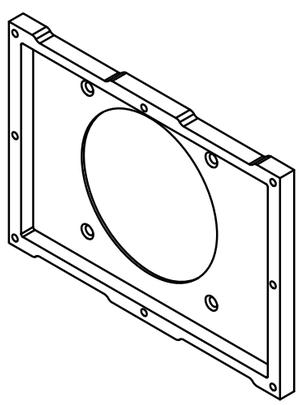

NOTE

1. AVOID SHARP CORNERS AND EDGES
2. 3mm TEXT TO BE ENGRAVED AND FILLED WITH BLACK COLOUR

SL NO	REF	DESCRIPTION	QTY
1	A	∅3.2 ⌵ ∅6.8	4
2	B	∅3.2	8

REV	CN.NO.	DATE	DESCRIPTION	CHECKED	APPROVED	NEXT ASSEMBLY	ITEM	QTY
4								
3								
2								
1								
0		19.08.17	ORIGINAL			DSA 36 109 0 015	3	1

MATERIAL: ALUMINIUM HE-30	FINISH: YELLOW CC COATING	PROJ.	TOL.GEN. ± IS:2102 TOL.AXIS. ± (MED)	PRJ. 109	
DRAWN: MALIKSAD	CHECKED	APPROVED	DIMNS: mm	SCALE: NTS	TITLE: HONEY COMB FOR RIGHT PLATE
DATE 19.08.17	DATE	DATE	DRG. NUMBER: DPD 36 109 0 056	SIZE: A3	ISSUE: 1
KERALA STATE ELECTRONICS DEVELOPMENT CORPORATION LIMITED.				NO.OF SHEETS: 1 / 1	

RESTRICTED

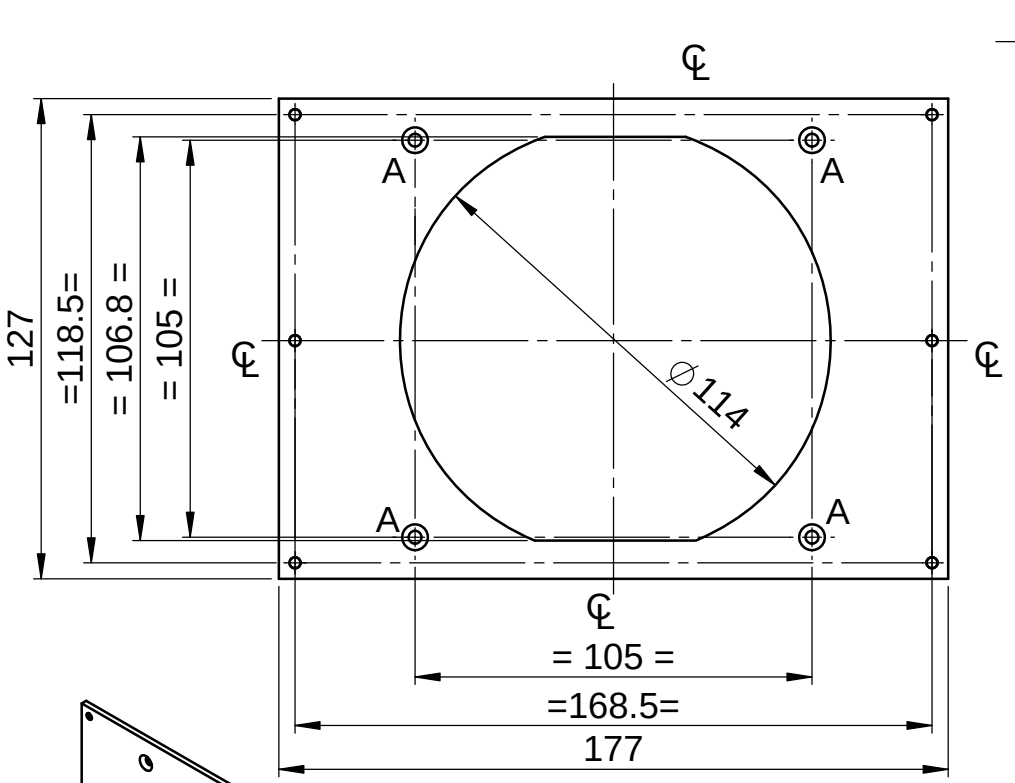

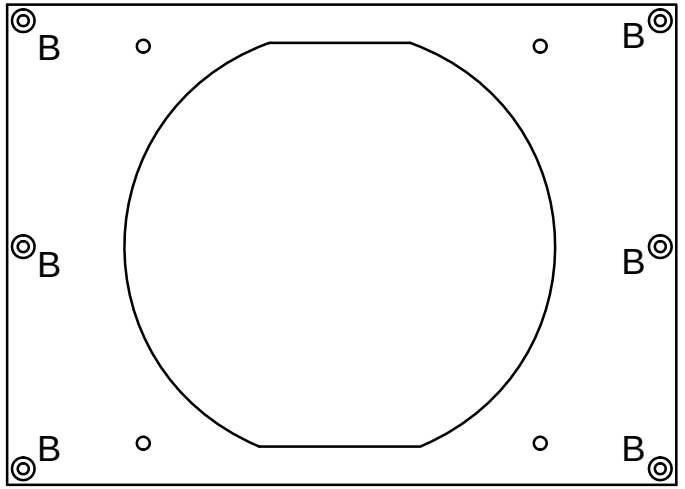

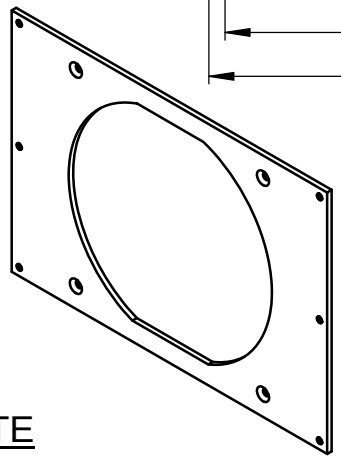

SL NO	REF	DESCRIPTION	QTY
1	A	∅3.2 ⌵ ∅6.8	4
2	B	∅2.9 ⌵ ∅6.2	6

REV	CN.NO.	DATE	DESCRIPTION	CHECKED	APPROVED	NEXT ASSEMBLY	ITEM	QTY
4								
3								
2								
1								
0		17.09.17	ORIGINAL			DSA 36 109 0 018	4	1

MATERIAL	FINISH	PROJ.	TOL.GEN. ± / TOL.AXIS. ±	PRJ.
ALUMINIUM HE-30	YELLOW CC COATING		IS: 2102 (MED.)	109

DRAWN	CHECKED	APPROVED	DIMNS	SCALE	TITLE
MALIKSAD			mm	NTS	HONEY COMB HOLDER
DATE 17.09.17	DATE	DATE	DRG. NUMBER		SIZE A4 / ISSUE 1
KERALA STATE ELECTRONICS DEVELOPMENT CORPORATION LIMITED			DPD 36 109 0 082		NO.OF SHEETS 1 / 1

NOTE

1. AVOID SHARP CORNERS AND EDGES
2. BURRS MUST BE REMOVED

RESTRICTED

RESTRICTED

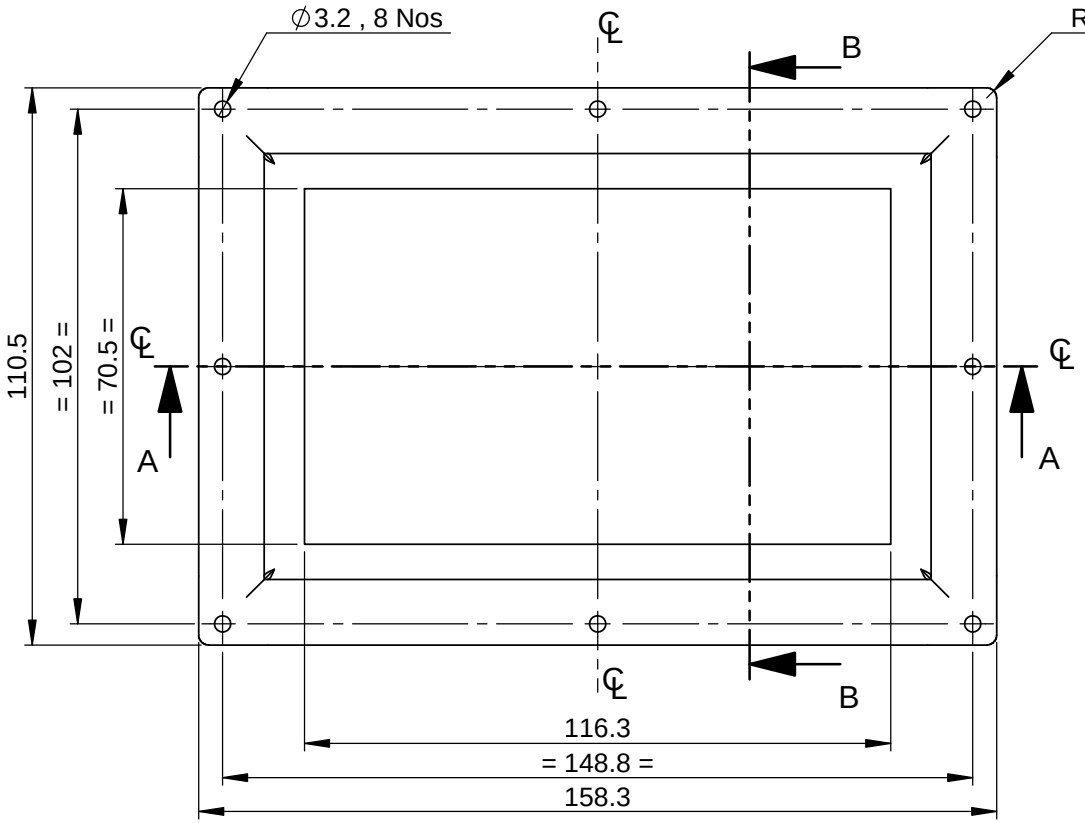

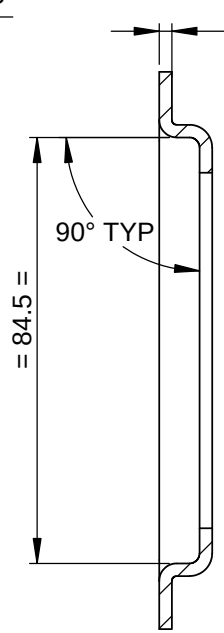

SECTION B-B

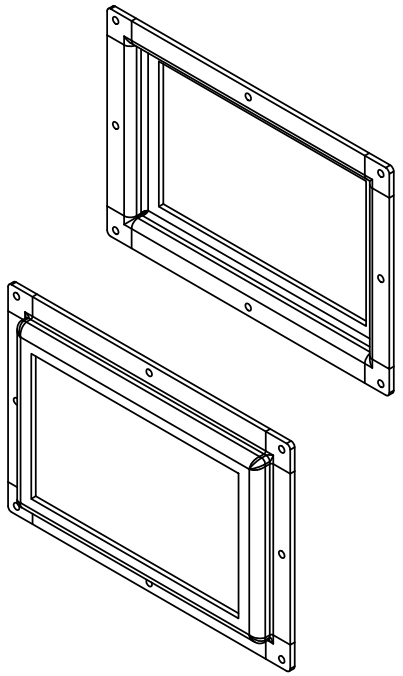

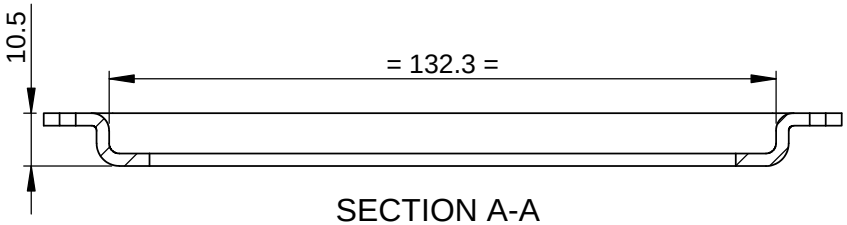

SECTION A-A

NOTE:

AVOID SHARP EDGES AND CORNERS
AFTER BENDING, CORNERS TO BE FILLED WITH WELDING

REV	CN.NO.	DATE	DESCRIPTION	CHECKED	APPROVED	NEXT ASSEMBLY	ITEM	QTY
4								
3								
2								
1								
0		19.08.17	ORIGINAL			DSA 36 109 0 019	27	1

MATERIAL: ALUMINIUM H32-5052	FINISH: YELLOW CC COATING	PROJ.	TOL.GEN. ± IS: 2102 TOL.AXIS. ± (MED.)	PRJ. 109	
DRAWN: MALIKSAD	CHECKED	APPROVED	DIMNS: mm / SCALE: NTS	TITLE: HONEY COMB HOLDER FOR LEFT PLATE	
DATE 19.08.17	DATE	DATE	DRG. NUMBER: DPD 36 109 0 226	SIZE: A4	ISSUE: 1
KERALA STATE ELECTRONICS DEVELOPMENT CORPORATION LIMITED				NO.OF SHEETS: 1 / 1	

RESTRICTED

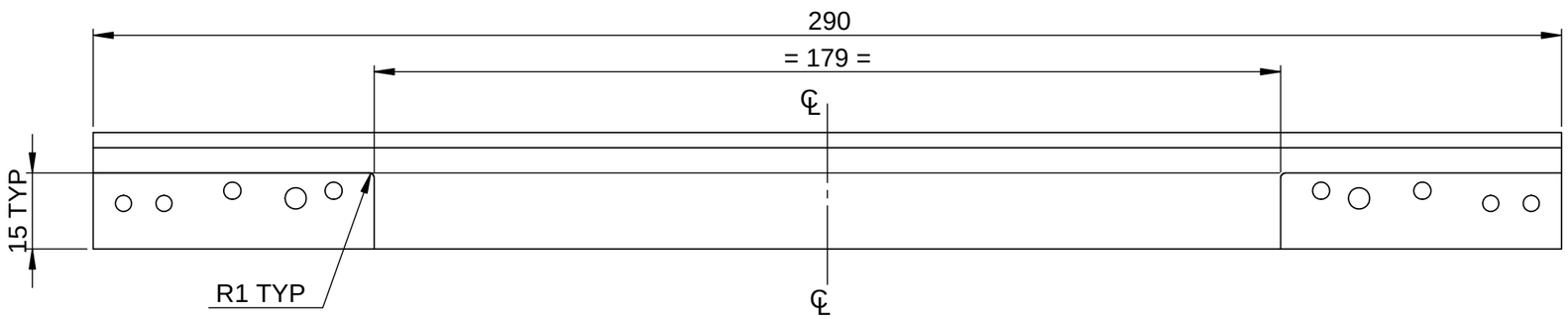

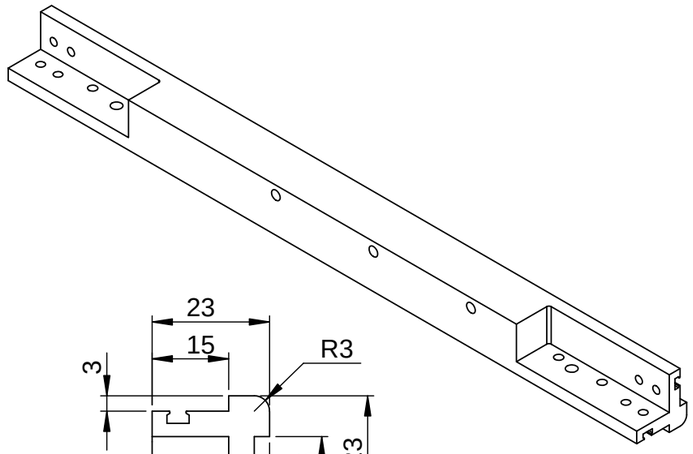

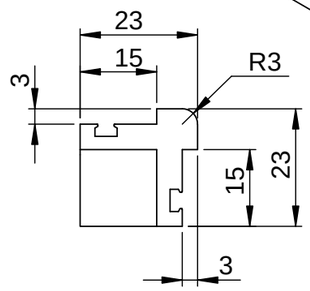

NOTE:

1. AVOID SHARP EDGES AND CORNERS
2. ALL BURRS MUST BE REMOVED

SL NO	REF	DESCRIPTION	QTY
1	A	DRILL ∅4.1, ↧10 AND M4 HELICOIL TAP	3
2	B	DRILL ∅3.2 ⌴ ∅6.2, ↧ 2.4	8
3	C	DRILL ∅3.2 ⌵ ∅ 6.3	4
4	D	DRILL ∅4.1 AND M4 HELICOIL TAP	2
5	E	DRILL ∅4.1, ↧15 AND M4 HELICOIL TAP	2

REV	CN.NO.	DATE	DESCRIPTION	CHECKED	APPROVED	NEXT ASSEMBLY	ITEM	QTY
4								
3								
2								
1								
0		19.08.17	ORIGINAL			DSA 36 109 0 020	12	1

MATERIAL: ALUMINIUM HE-30	FINISH: YELLOW CC COATING	PROJ.	TOL.GEN. ± IS:2102 TOL.AXIS. ± (MED)	PRJ. 109	
DRAWN: MALIKSAD	CHECKED	APPROVED	DIMNS: mm	SCALE: NTS	TITLE: HT FRONT BOTTOM FRAME
DATE 19.08.17	DATE	DATE	DRG. NUMBER: DPD 36 109 0 098	SIZE: A3	ISSUE: 1
KERALA STATE ELECTRONICS DEVELOPMENT CORPORATION LIMITED.				NO.OF SHEETS: 1/2	

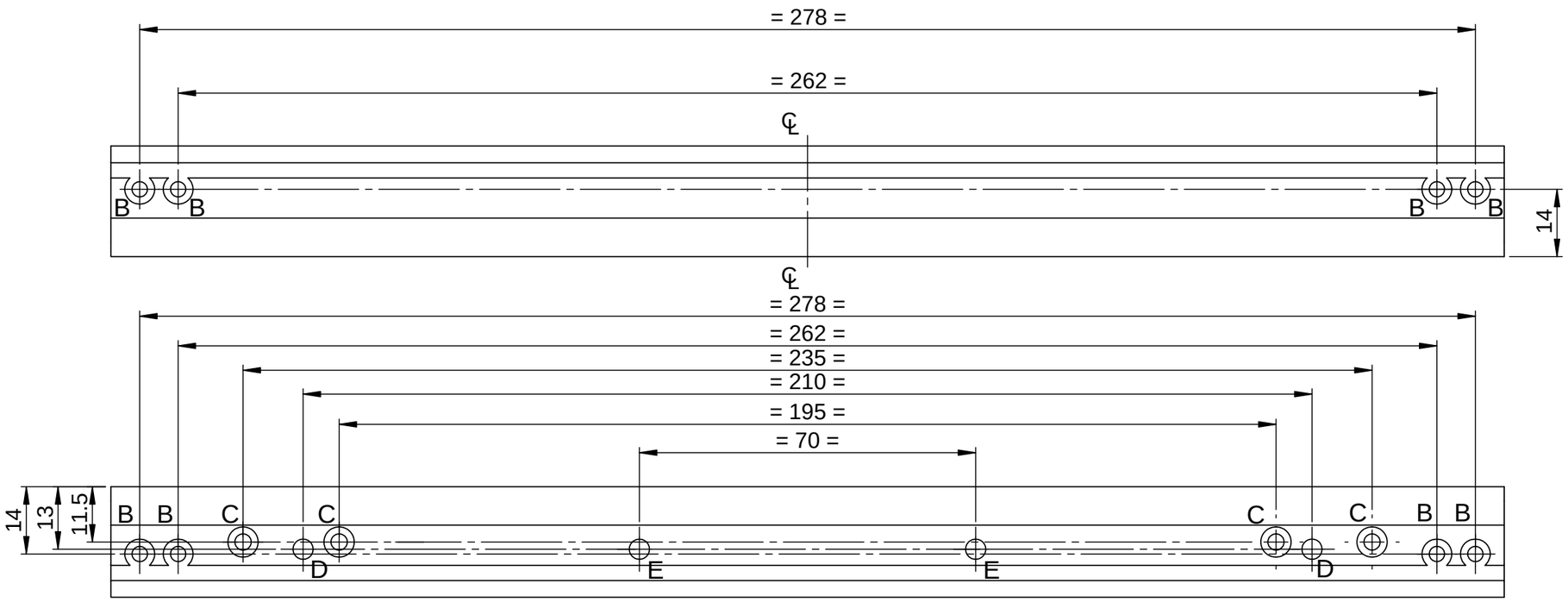

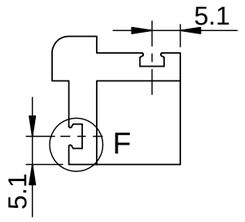

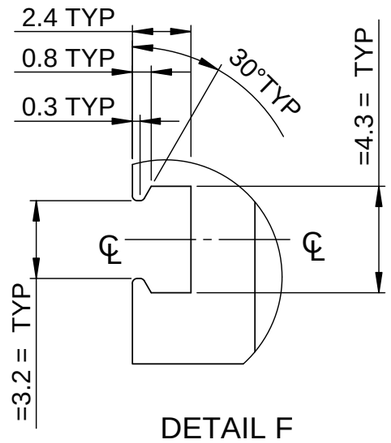

DETAIL F

REV	CN.NO.	DATE	DESCRIPTION	CHECKED	APPROVED	NEXT ASSEMBLY	ITEM	QTY
4								
3								
2								
1								
0		19.08.17	ORIGINAL			DSA 36 109 0 020	12	1

MATERIAL: ALUMINIUM HE-30	FINISH: YELLOW CC COATING	PROJ.	TOL.GEN. ± IS:2102 TOL.AXIS. ± (MED)	PRJ. 109	
DRAWN: MALIKSAD	CHECKED	APPROVED	DIMNS: mm / SCALE: NTS	TITLE: HT FRONT BOTTOM FRAME	
DATE 19.08.17	DATE	DATE	DRG. NUMBER: DPD 36 109 0 098	SIZE: A3	ISSUE: 1
KERALA STATE ELECTRONICS DEVELOPMENT CORPORATION LIMITED.				NO.OF SHEETS: 2 / 2	

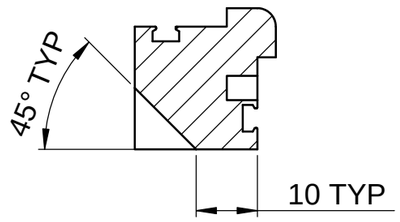

SECTION D-D

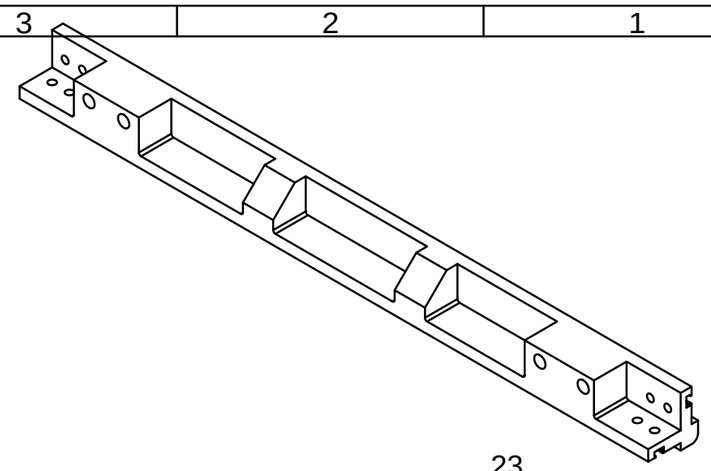

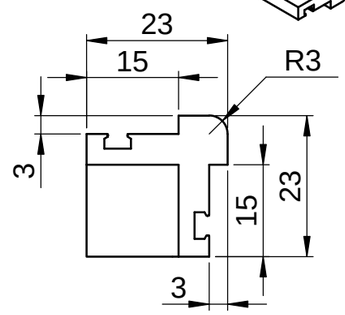

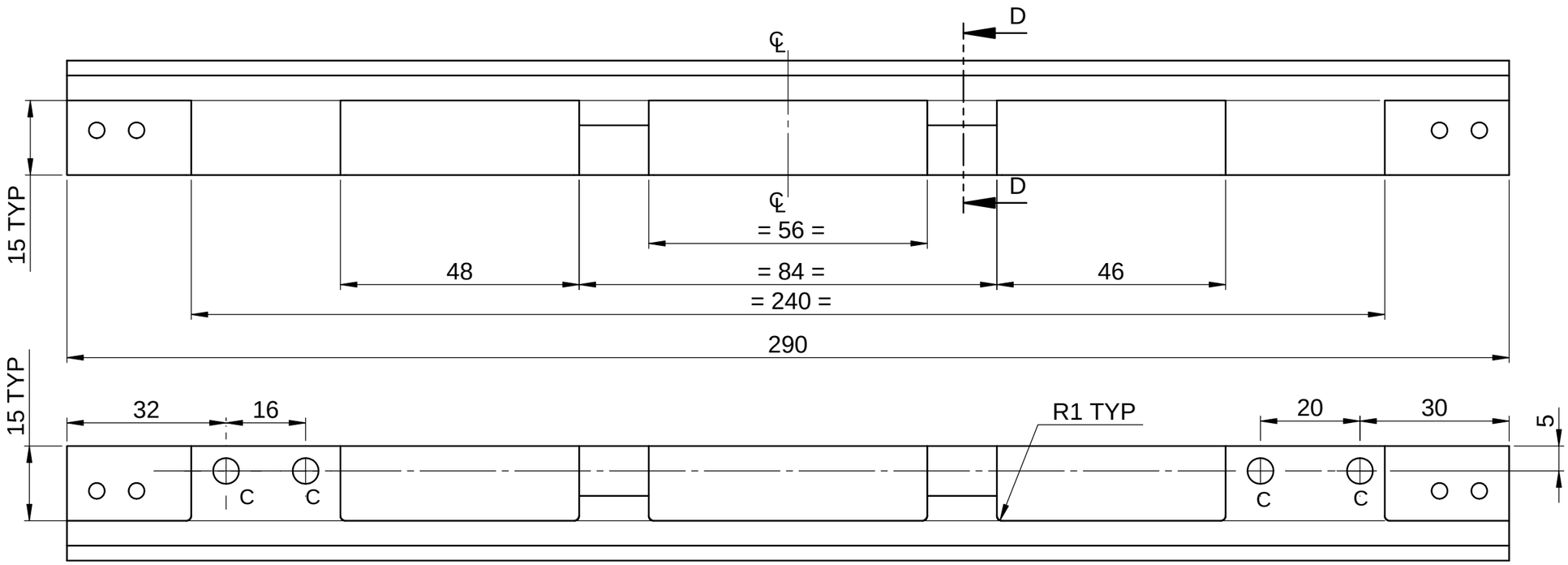

NOTE

1. AVOID SHARP CORNERS AND EDGES
2. ALL BURRS MUST BE REMOVED

SL NO	REF	DESCRIPTION	QTY
1	A	DRILL ⌀3.2, ⌴ ⌀6.2, ↧2.4	8
2	B	DRILL ⌀4.1, ↧5 AND M4 HELICOIL TAP	4
3	C	DRILL ⌀5.2, ↧15 AND M5 HELICOIL TAP	4

REV	CN.NO.	DATE	DESCRIPTION	CHECKED	APPROVED	NEXT ASSEMBLY	ITEM	QTY
4								
3								
2								
1								
0		19.08.17	ORIGINAL			DSA 36 109 0 020	16	1

MATERIAL: ALUMINIUM HE-30	FINISH: YELLOW CC COATING	PROJ.	TOL.GEN. ± IS:2102 TOL.AXIS. ± (MED)	PRJ. 109	
DRAWN: MALIKSAD	CHECKED	APPROVED	DIMNS: mm / SCALE: NTS	TITLE: HT TOP FRONT FRAME	
DATE 19.08.17	DATE	DATE			

KERALA STATE ELECTRONICS DEVELOPMENT CORPORATION LIMITED

DRG. NUMBER: DPD 36 109 0 102

SIZE	ISSUE
A3	1
NO.OF SHEETS	1 / 2

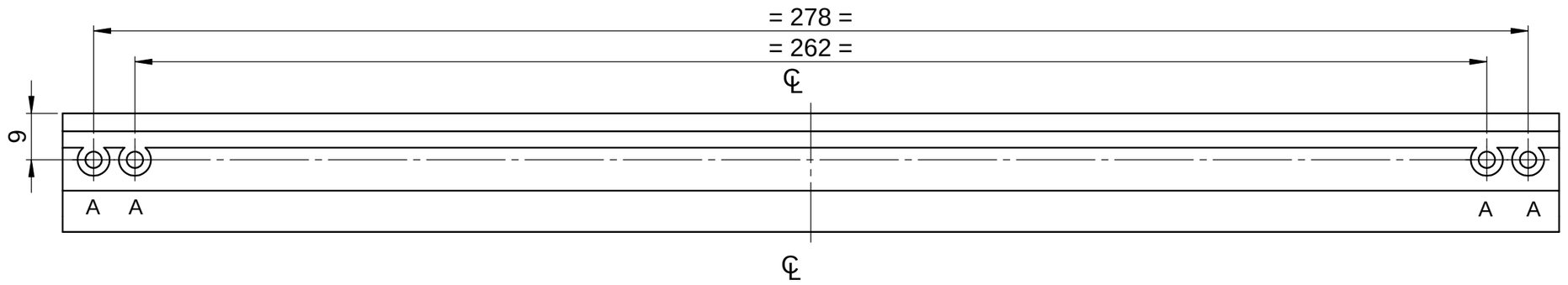

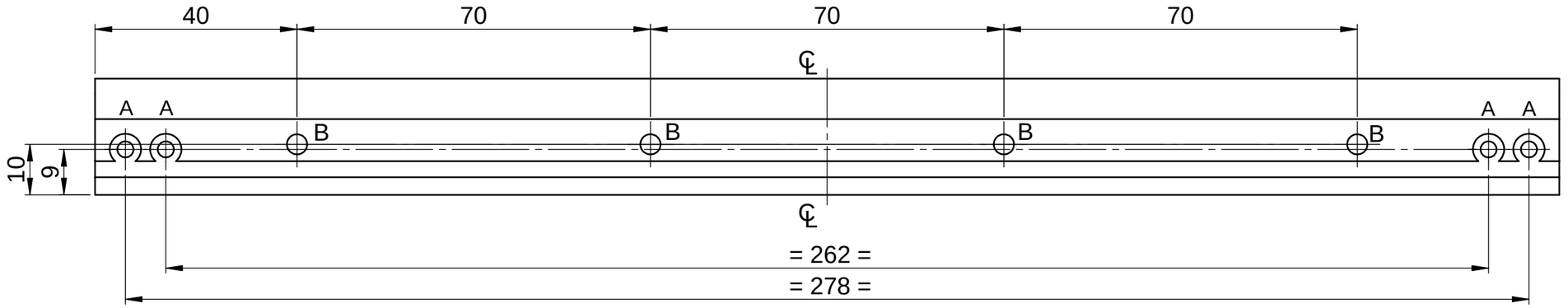

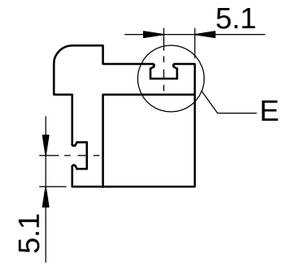

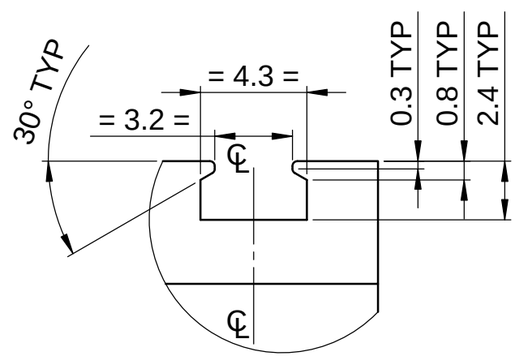

DETAIL E

4								
3								
2								
1								
0		19.08.17	ORIGINAL			DSA 36 109 0 020	16	1
REV	CN.NO.	DATE	DESCRIPTION	CHECKED	APPROVED	NEXT ASSEMBLY	ITEM	QTY

MATERIAL: ALUMINIUM HE-30	FINISH: YELLOW CC COATING	PROJ.	TOL.GEN. ± IS:2102 TOL.AXIS. ± (MED)	PRJ. 109	
DRAWN: MALIKSAD	CHECKED	APPROVED	DIMNS: mm / SCALE: NTS	TITLE: HT TOP FRONT FRAME	
DATE 19.08.17	DATE	DATE	KERALA STATE ELECTRONICS DEVELOPMENT CORPORATION LIMITED	DRG. NUMBER: DPD 36 109 0 102	SIZE: A3 / ISSUE: 1 / NO.OF SHEETS: 2/2

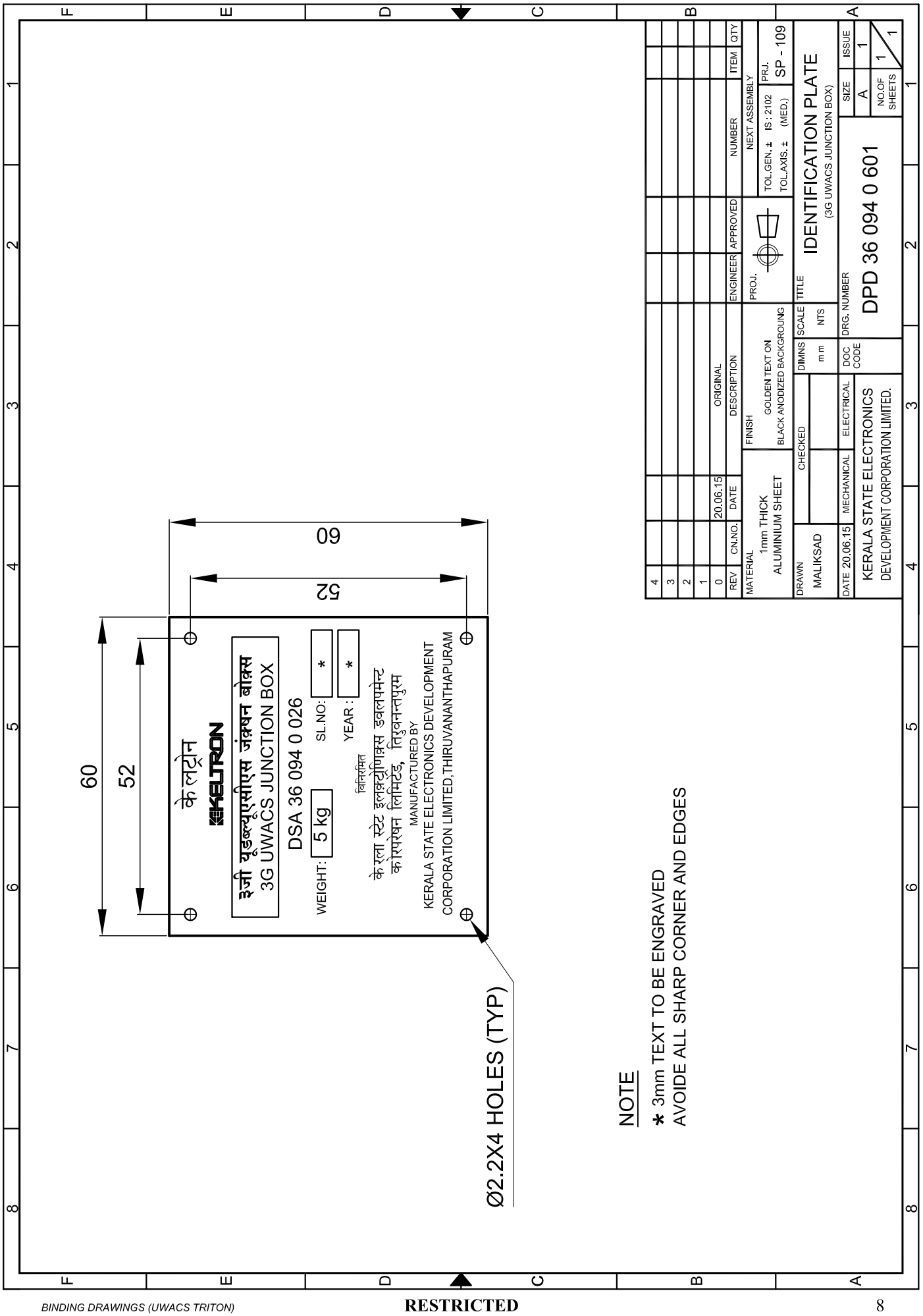
60
52
60
52
केल्ट्रोन
KELTRON
इजी यूडब्ल्यूएसीएस जंक्षन बोक्स
3G UWACS JUNCTION BOX
DSA 36 094 0 026
WEIGHT: 5 kg
SL.NO: *
YEAR : *
विनिर्मित
के रला स्टेट इलक्ट्रोणिक्स डवलपमेन्ट
कोरपरेषन लिमिटेड, तिरुवनन्तपुरम
MANUFACTURED BY
KERALA STATE ELECTRONICS DEVELOPMENT
CORPORATION LIMITED,THIRUVANANTHAPURAM
Ø2.2X4 HOLES (TYP)
NOTE
* 3mm TEXT TO BE ENGRAVED
AVOIDE ALL SHARP CORNER AND EDGES
4
3
2
1
0 20.06.15 ORIGINAL
REV CN.NO. DATE DESCRIPTION ENGINEER APPROVED NUMBER ITEM QTY
MATERIAL 1mm THICK ALUMINIUM SHEET
FINISH GOLDEN TEXT ON BLACK ANODIZED BACKGROUNG
PROJ.
NEXT ASSEMBLY
TOL.GEN. ± IS : 2102 (MED.)
TOL.AXIS. ± PRJ. SP - 109
DRAWN MALIKSAD
CHECKED
DIMNS m m
SCALE NTS
TITLE IDENTIFICATION PLATE
(3G UWACS JUNCTION BOX)
DATE 20.06.15
MECHANICAL
ELECTRICAL
DOC. CODE
DRG. NUMBER DPD 36 094 0 601
SIZE A
ISSUE 1
NO.OF SHEETS 1 1
KERALA STATE ELECTRONICS
DEVELOPMENT CORPORATION LIMITED.

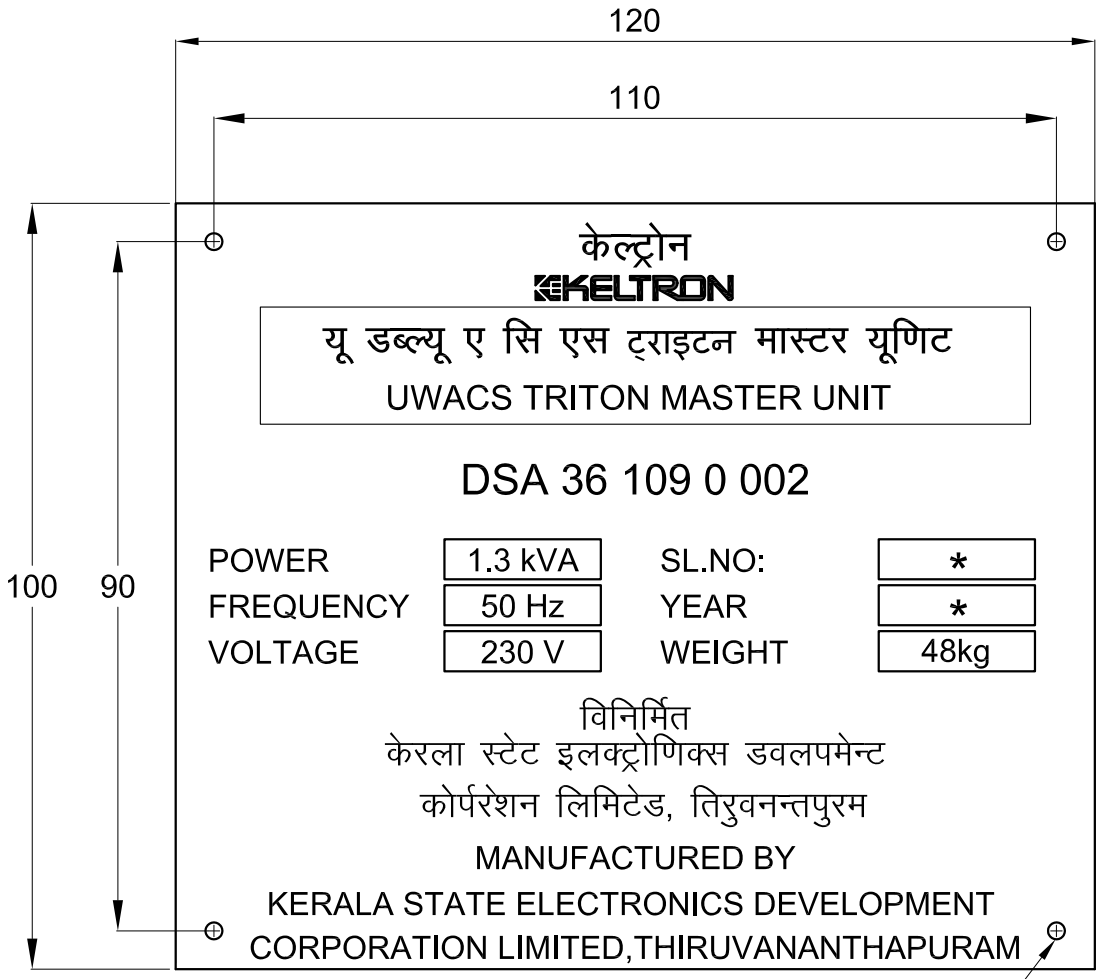

△2 Ø2.2 X 4 HOLES (TYP)

NOTE :

AVOID SHARP CORNERS AND EDGES

* 3mm TEXT TO BE ENGRAVED

ISSUE	CN.NO.	DATE	DESCRIPTION	APPROVED	NUMBER	ITEM	QTY
5							
4							
3							
△2		20/06/15	REVISED		DSA 36 109 0 002	44	1
1		21/05/15	ORGINAL		DSA 36 109 0 002	44	1

MATERIAL: 1 mm THK. AL. SHEET	FINISH: GOLDEN TEXT ON BLACK ANODISED BACKGROUND	PROJ.	NEXT ASSEMBLY TOL.GEN. ± IS : 2102 TOL.AXIS. ± (MED.) PRJ. 109

DRAWN	CHECKED		DIMNS	SCALE	TITLE
MALIKSAD			mm	1 : 1	IDENTIFICATION PLATE (UWACS TRITON MASTER UNIT)

DATE 21/05/15	ELECTRICAL	MECHANICAL	DOC CODE	DRG. NUMBER	SIZE	ISSUE
KERALA STATE ELECTRONICS DEVELOPMENT CORPORATION LIMITED.				DPD 36 109 0 213	A4	1
					NO.OF SHEETS	1/1

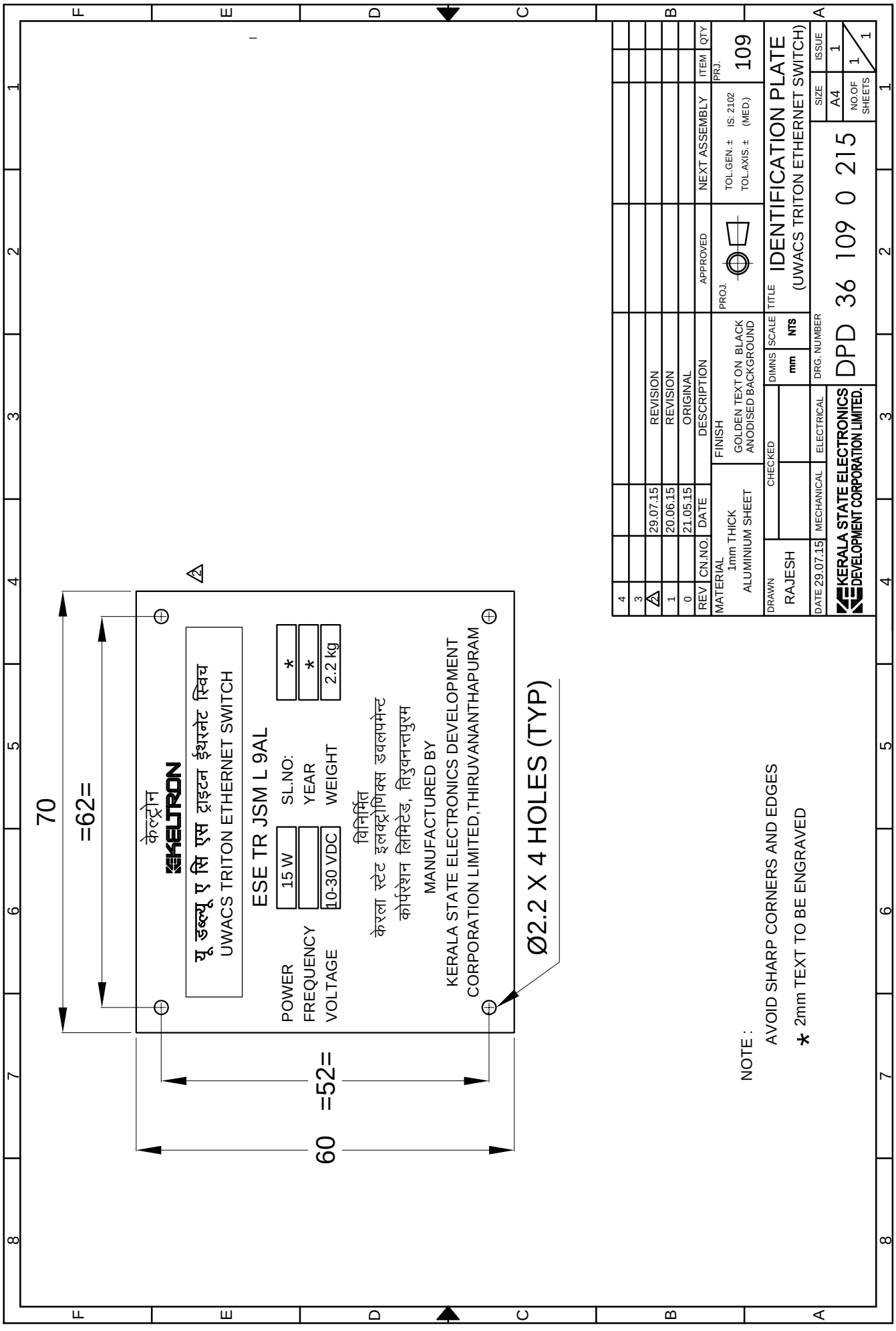
केल्ट्रोन
KELTRON
यू डब्ल्यू ए सि एस ट्राइटन ईथरनेट स्विच
UWACS TRITON ETHERNET SWITCH
ESE TR JSM L 9AL
POWER 15 W
FREQUENCY
VOLTAGE 10-30 VDC
SL.NO: *
YEAR *
WEIGHT 2.2 kg
विनिर्मित
केरला स्टेट इलक्ट्रोणिक्स डवलपमेन्ट
कोर्परेशन लिमिटेड, तिरुवनन्तपुरम
MANUFACTURED BY
KERALA STATE ELECTRONICS DEVELOPMENT
CORPORATION LIMITED,THIRUVANANTHAPURAM
Ø2.2 X 4 HOLES (TYP)
70
=62=
=52=
60
NOTE :
AVOID SHARP CORNERS AND EDGES
* 2mm TEXT TO BE ENGRAVED
4
3
2 29.07.15 REVISION
1 20.06.15 REVISION
0 21.05.15 ORIGINAL
REV CN.NO. DATE DESCRIPTION APPROVED NEXT ASSEMBLY ITEM QTY
MATERIAL 1mm THICK ALUMINIUM SHEET
FINISH GOLDEN TEXT ON BLACK ANODISED BACKGROUND
PROJ.
TOL.GEN. ± IS: 2102
TOL.AXIS. ± (MED.)
PRJ. 109
DRAWN RAJESH
CHECKED
DIMNS mm
SCALE NTS
TITLE IDENTIFICATION PLATE (UWACS TRITON ETHERNET SWITCH)
DATE 29.07.15 MECHANICAL ELECTRICAL
DRG. NUMBER DPD 36 109 0 215
KERALA STATE ELECTRONICS DEVELOPMENT CORPORATION LIMITED.
SIZE A4
ISSUE 1
NO.OF SHEETS 1 / 1

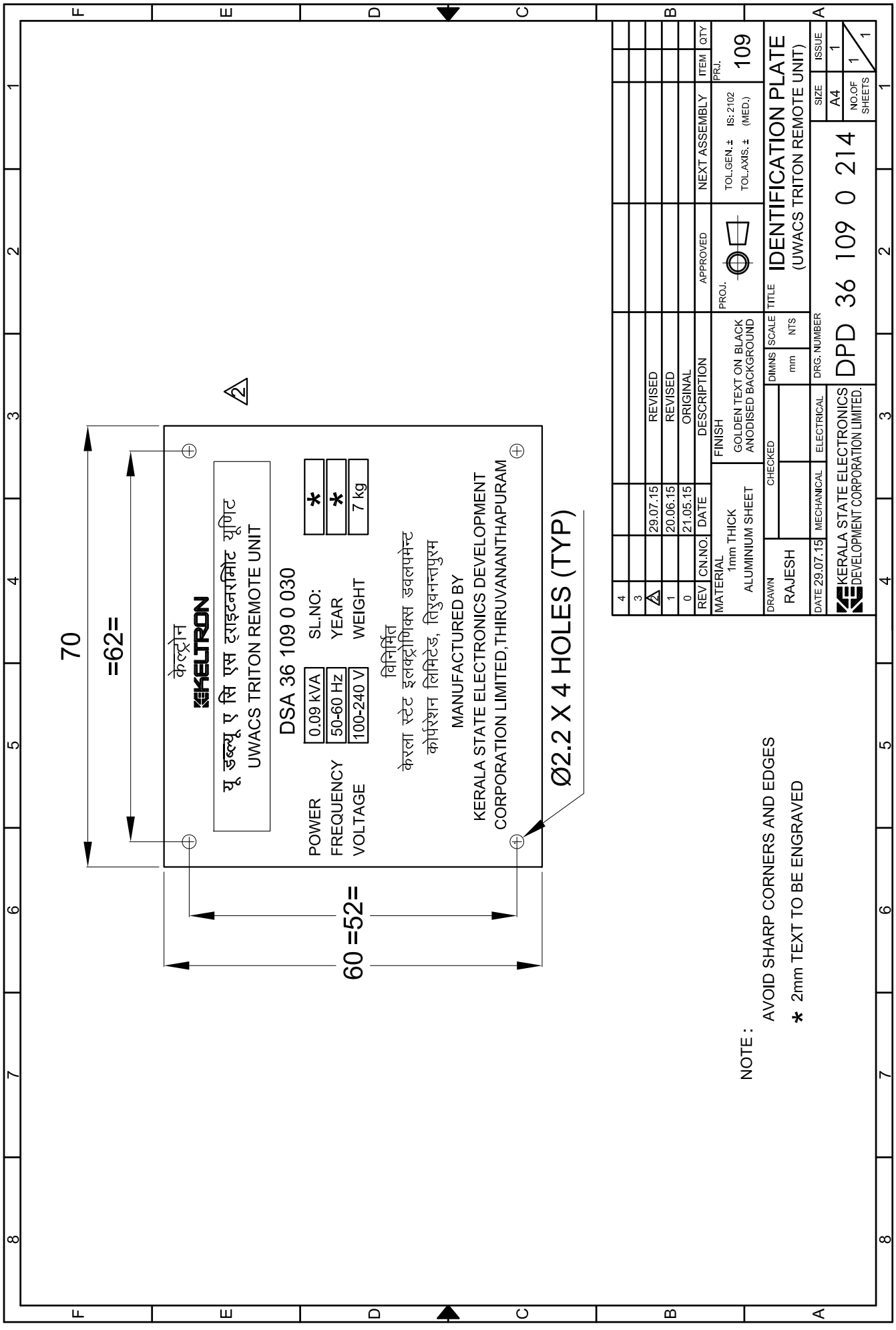
70
=62=
60 =52=
केल्ट्रोन
KELTRON
यू डब्ल्यू ए सि एस ट्राइटनरिमोट यूणिट
UWACS TRITON REMOTE UNIT
DSA 36 109 0 030
POWER 0.09 kVA SL.NO: *
FREQUENCY 50-60 Hz YEAR *
VOLTAGE 100-240 V WEIGHT 7 kg
विनिर्मित
केरला स्टेट इलक्ट्रोणिक्स डवलपमेन्ट
कोर्परेशन लिमिटेड, तिरुवनन्तपुरम
MANUFACTURED BY
KERALA STATE ELECTRONICS DEVELOPMENT
CORPORATION LIMITED,THIRUVANANTHAPURAM
Ø2.2 X 4 HOLES (TYP)
2
NOTE :
AVOID SHARP CORNERS AND EDGES
* 2mm TEXT TO BE ENGRAVED
4
3
2 29.07.15 REVISED
1 20.06.15 REVISED
0 21.05.15 ORIGINAL
REV CN.NO. DATE DESCRIPTION APPROVED NEXT ASSEMBLY ITEM QTY
MATERIAL 1mm THICK ALUMINIUM SHEET
FINISH GOLDEN TEXT ON BLACK ANODISED BACKGROUND
PROJ.
TOL.GEN. ± IS: 2102
TOL.AXIS. ± (MED.)
PRJ. 109
DRAWN RAJESH DATE 29.07.15
CHECKED MECHANICAL ELECTRICAL
DIMNS mm
SCALE NTS
TITLE IDENTIFICATION PLATE (UWACS TRITON REMOTE UNIT)
DRG. NUMBER DPD 36 109 0 214
SIZE A4
ISSUE 1
NO.OF SHEETS 1 / 1
KERALA STATE ELECTRONICS DEVELOPMENT CORPORATION LIMITED.

RESTRICTED

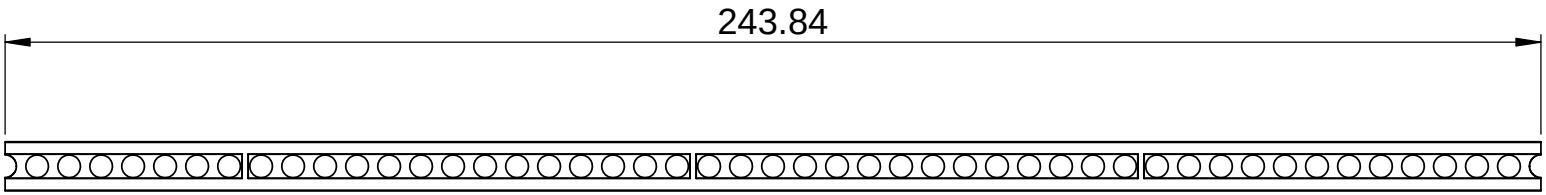

NOTE:

AVOID SHARP EDGES AND CORNERS

4								
3								
2								
1								
0		24.08.19	ORIGINAL			DSA 36 109 0 012	37	2
REV	CN.NO.	DATE	DESCRIPTION	CHECKED	APPROVED	NEXT ASSEMBLY	ITEM	QTY

MATERIAL STANDARD ITEM SCHROFF PART NO:24560-863	FINISH -	PROJ.	TOL.GEN. ± TOL.AXIS. ±	IS: 2102 (MED.)	PRJ. 109

DRAWN MALIKSAD	CHECKED	APPROVED	DIMNS mm	SCALE NTS	TITLE INSULATION STRIP-BOTTOM CARD CAGE
DATE 24.08.19	DATE	DATE	DRG. NUMBER DPD 36 109 0 232		SIZE A4 / ISSUE 1
KERALA STATE ELECTRONICS DEVELOPMENT CORPORATION LIMITED					NO.OF SHEETS 1 / 1

RESTRICTED

RESTRICTED

RESTRICTED

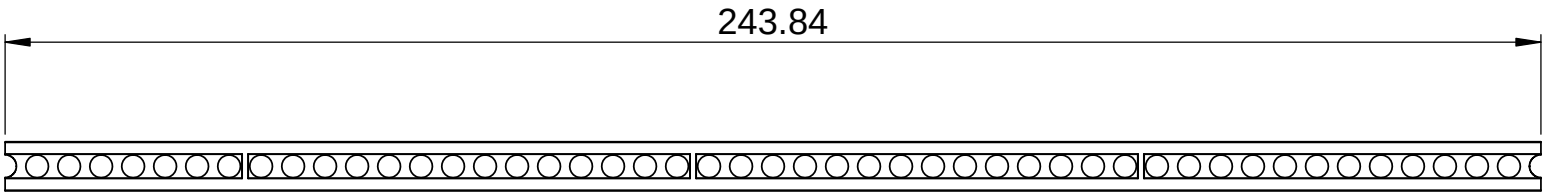

NOTE:

AVOID SHARP EDGES AND CORNERS

REV	CN.NO.	DATE	DESCRIPTION	CHECKED	APPROVED	NEXT ASSEMBLY	ITEM	QTY
4								
3								
2								
1								
0		19.08.17	ORIGINAL			DSA 36 109 0 013	32	2

MATERIAL STANDARD ITEM SCHROFF PART NO:24560-863	FINISH -	PROJ.	TOL.GEN. ± TOL.AXIS. ±	IS: 2102 (MED.)	PRJ. 109

DRAWN	CHECKED	APPROVED	DIMNS	SCALE	TITLE
MALIKSAD			mm	NTS	INSULATION STRIP-TOP CARD CAGE
DATE 19.08.17	DATE	DATE	DRG. NUMBER		SIZE: A4 / ISSUE: 1

KERALA STATE ELECTRONICS DEVELOPMENT CORPORATION LIMITED

DPD 36 109 0 234

NO.OF SHEETS: 1 / 1

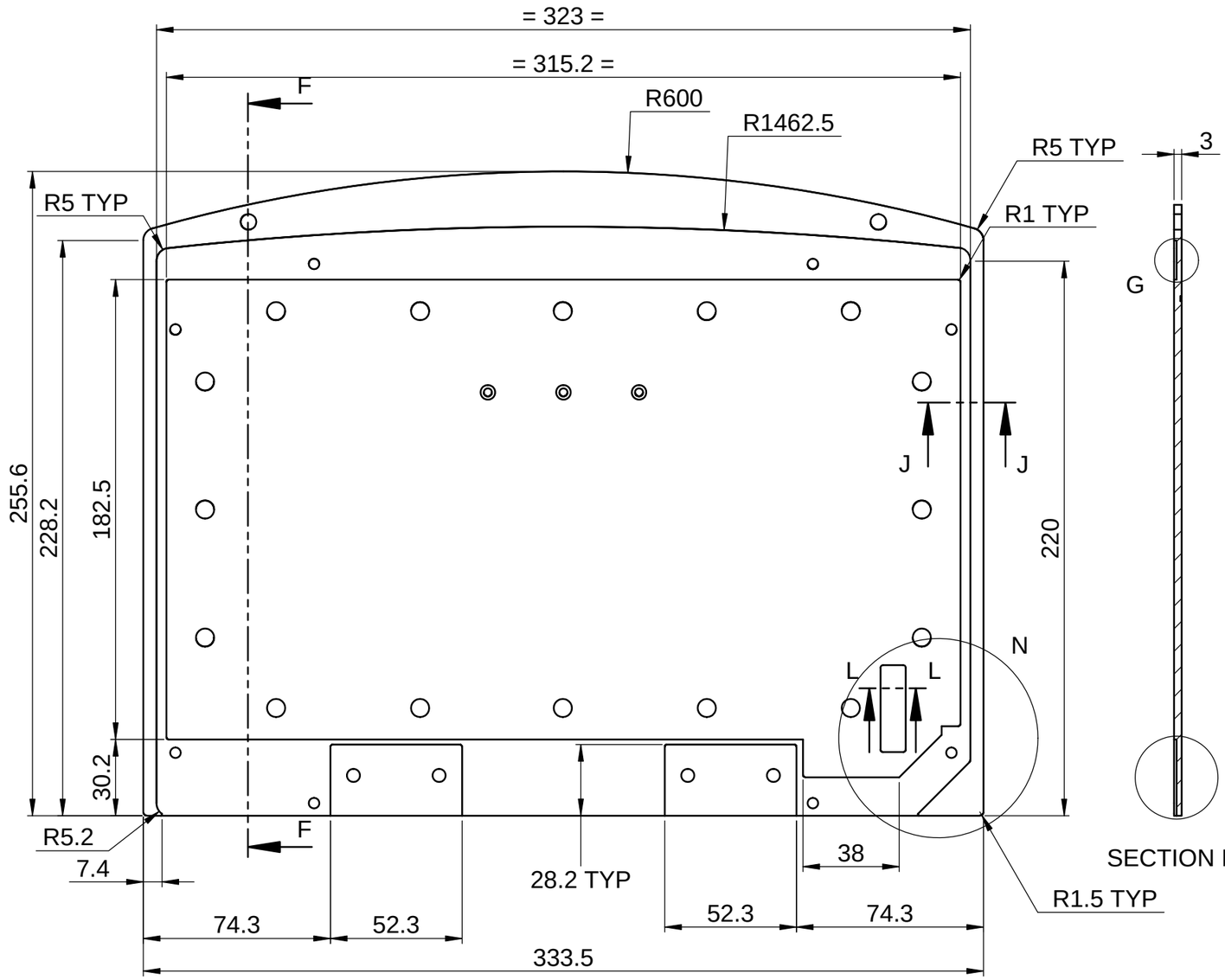

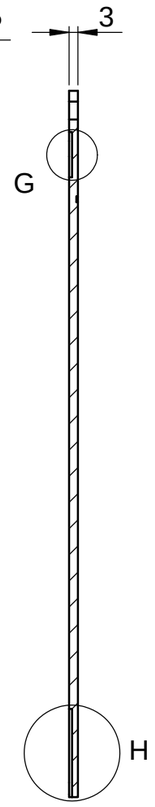

SECTION F-F

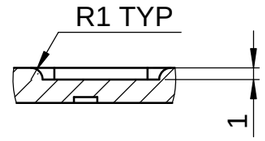

DETAIL M

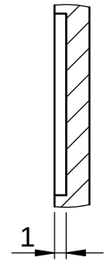

DETAIL G

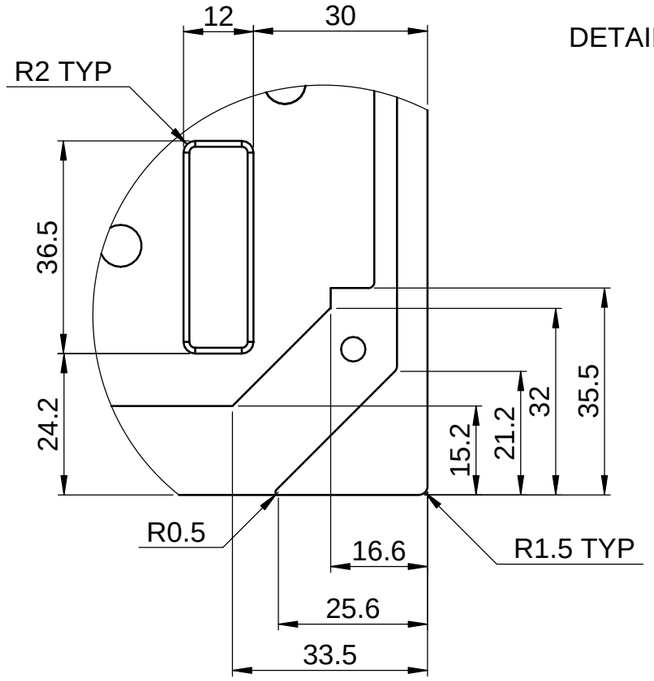

DETAIL N

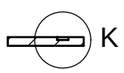

SECTION J-J

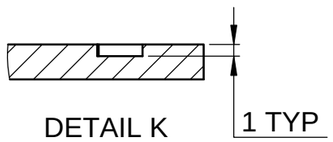

DETAIL K

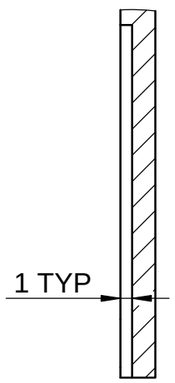

DETAIL H

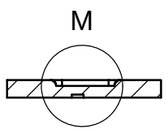

SECTION L-L

REV	CN.NO.	DATE	DESCRIPTION	CHECKED	APPROVED	NEXT ASSEMBLY	ITEM	QTY
4								
3								
2								
1								
0		19.08.16	ORIGINAL			DSA 36 109 0 022	4	1

MATERIAL: ALUMINIUM HE-30	FINISH: YELLOW CC COATING	PROJ.	TOL.GEN. ± IS:2102 TOL.AXIS. ± (MED)	PRJ. 109	
DRAWN: THUSHANTH	CHECKED	APPROVED	DIMNS: mm	SCALE: NTS	TITLE: KEY BOARD BACK PLATE
DATE 19.08.16	DATE	DATE	DRG. NUMBER: DPD 36 109 0 108	SIZE: A3	ISSUE: 1
KERALA STATE ELECTRONICS DEVELOPMENT CORPORATION LIMITED.				NO.OF SHEETS: 1 / 4	

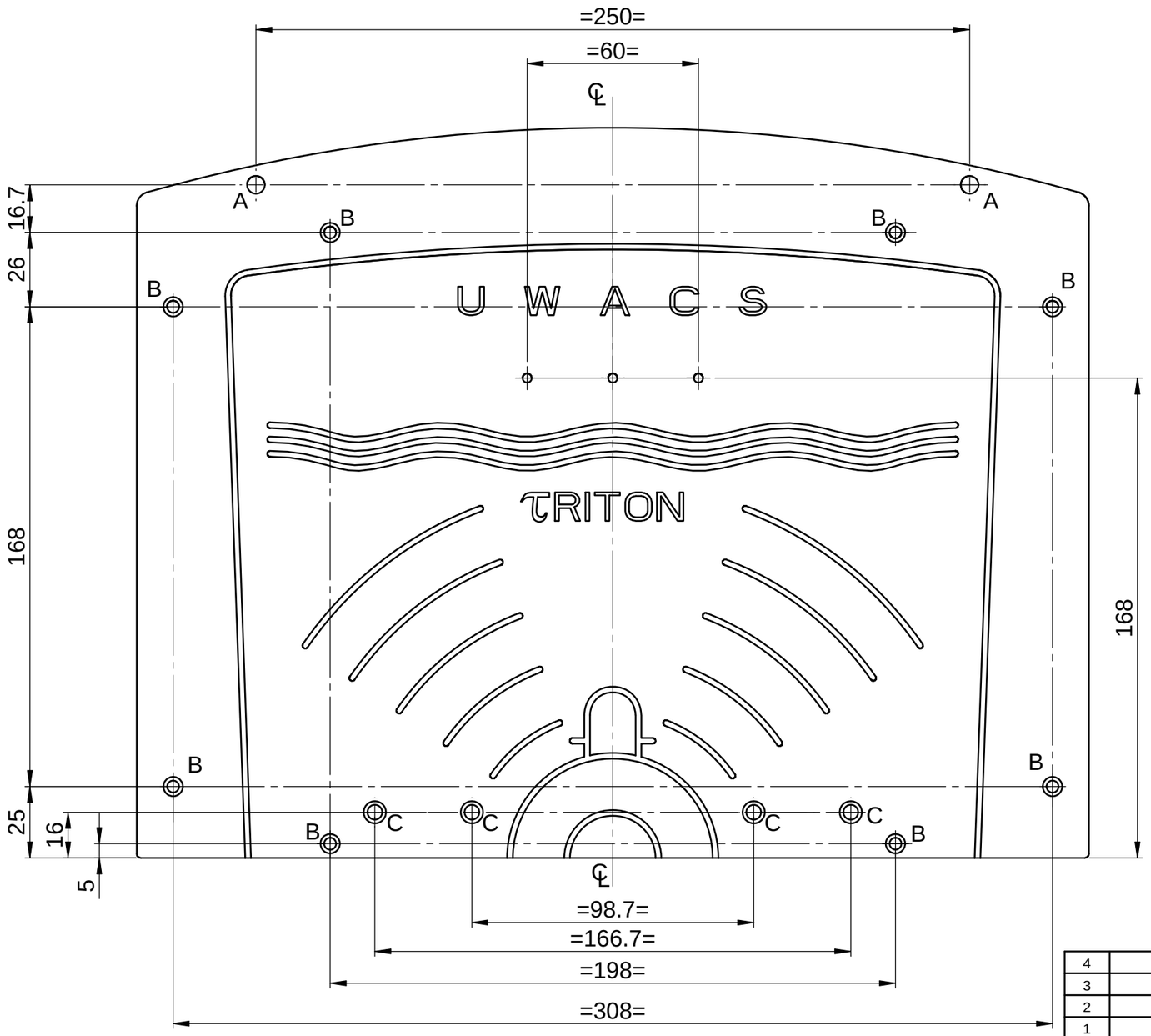

REV	CN.NO.	DATE	DESCRIPTION	CHECKED	APPROVED	NEXT ASSEMBLY	ITEM	QTY
4								
3								
2								
1								
0		19.08.16	ORIGINAL			DSA 36 109 0 022	4	1

MATERIAL: ALUMINIUM HE-30	FINISH: YELLOW CC COATING	PROJ.	TOL.GEN. ± IS:2102 TOL.AXIS. ± (MED)	PRJ.: 109	
DRAWN: THUSHANTH	CHECKED	APPROVED	DIMNS: mm	SCALE: NTS	TITLE: KEY BOARD BACK PLATE
DATE 19.08.16	DATE	DATE			

KERALA STATE ELECTRONICS DEVELOPMENT CORPORATION LIMITED.

DRG. NUMBER: DPD 36 109 0 108

SIZE	ISSUE
A3	1
NO.OF SHEETS	2 / 4

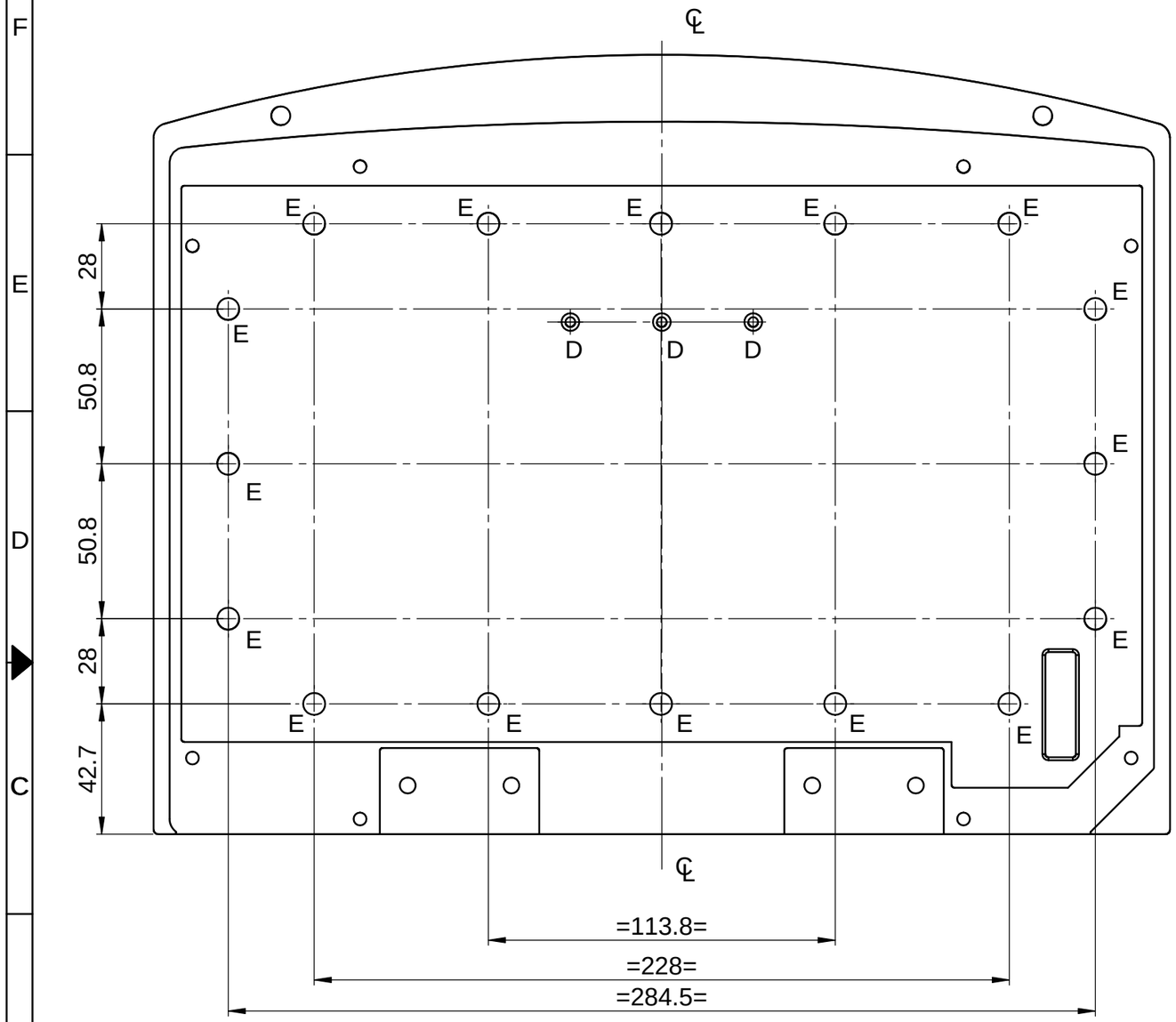

SL NO	REF	DESCRIPTION	QTY
1	A	∅6.2	2
2	B	∅4.2 ⌵ ∅6.8	8
3	C	∅5.2 ⌵ ∅7.8	4
4	D	∅3.2 ⌵ ∅5.8	3
5	E	∅7.2↧2.3	16

REV	CN.NO.	DATE	DESCRIPTION	CHECKED	APPROVED	NEXT ASSEMBLY	ITEM	QTY
4								
3								
2								
1								
0		19.08.16	ORIGINAL			DSA 36 109 0 022	4	1

MATERIAL: ALUMINIUM HE-30	FINISH: YELLOW CC COATING	PROJ.	TOL.GEN. ± IS:2102 TOL.AXIS. ± (MED)	PRJ. 109	
DRAWN: THUSHANTH	CHECKED	APPROVED	DIMNS: mm / SCALE: NTS	TITLE: KEY BOARD BACK PLATE	
DATE 19.08.16	DATE	DATE	DRG. NUMBER: DPD 36 109 0 108	SIZE: A3	ISSUE: 1
KERALA STATE ELECTRONICS DEVELOPMENT CORPORATION LIMITED.				NO.OF SHEETS: 3/4	

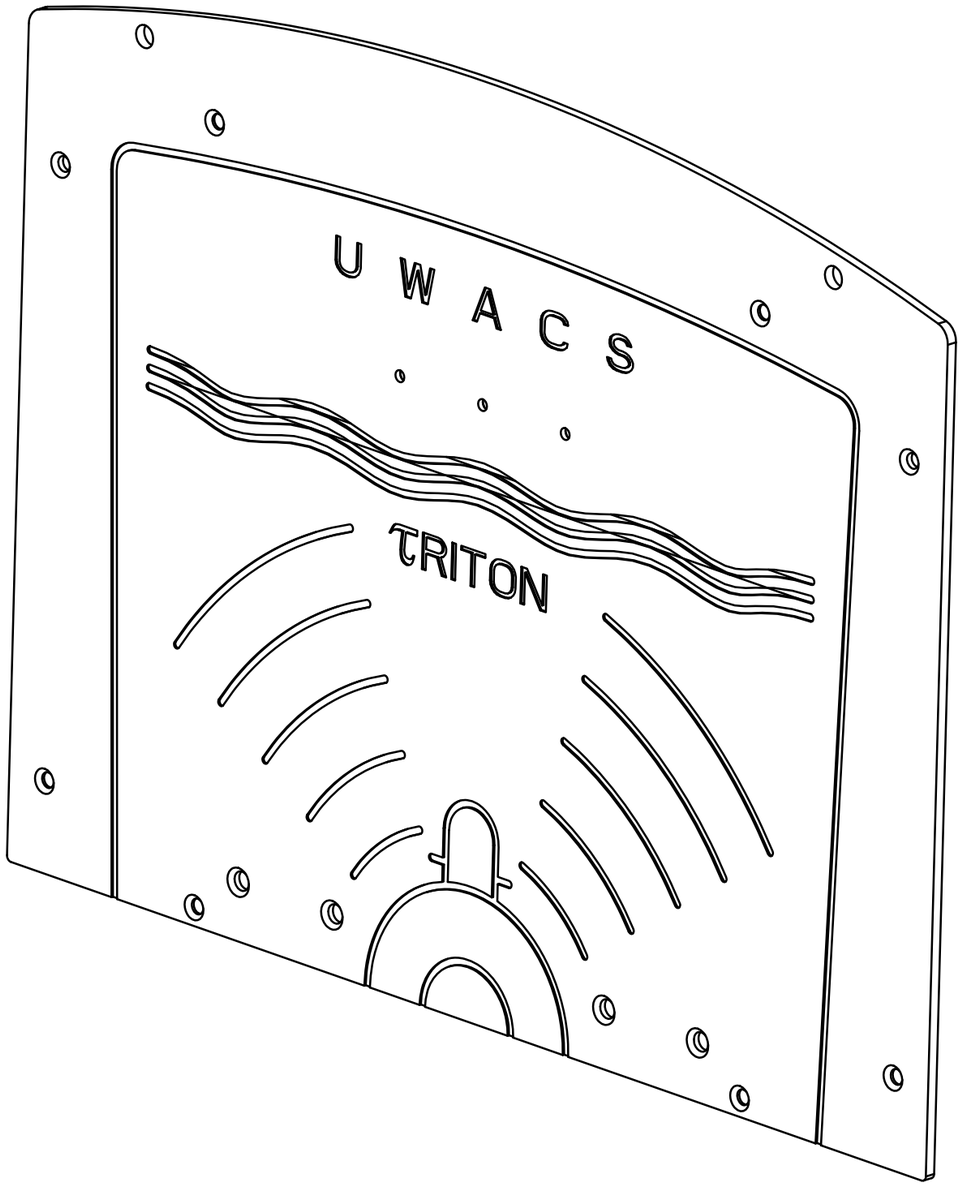

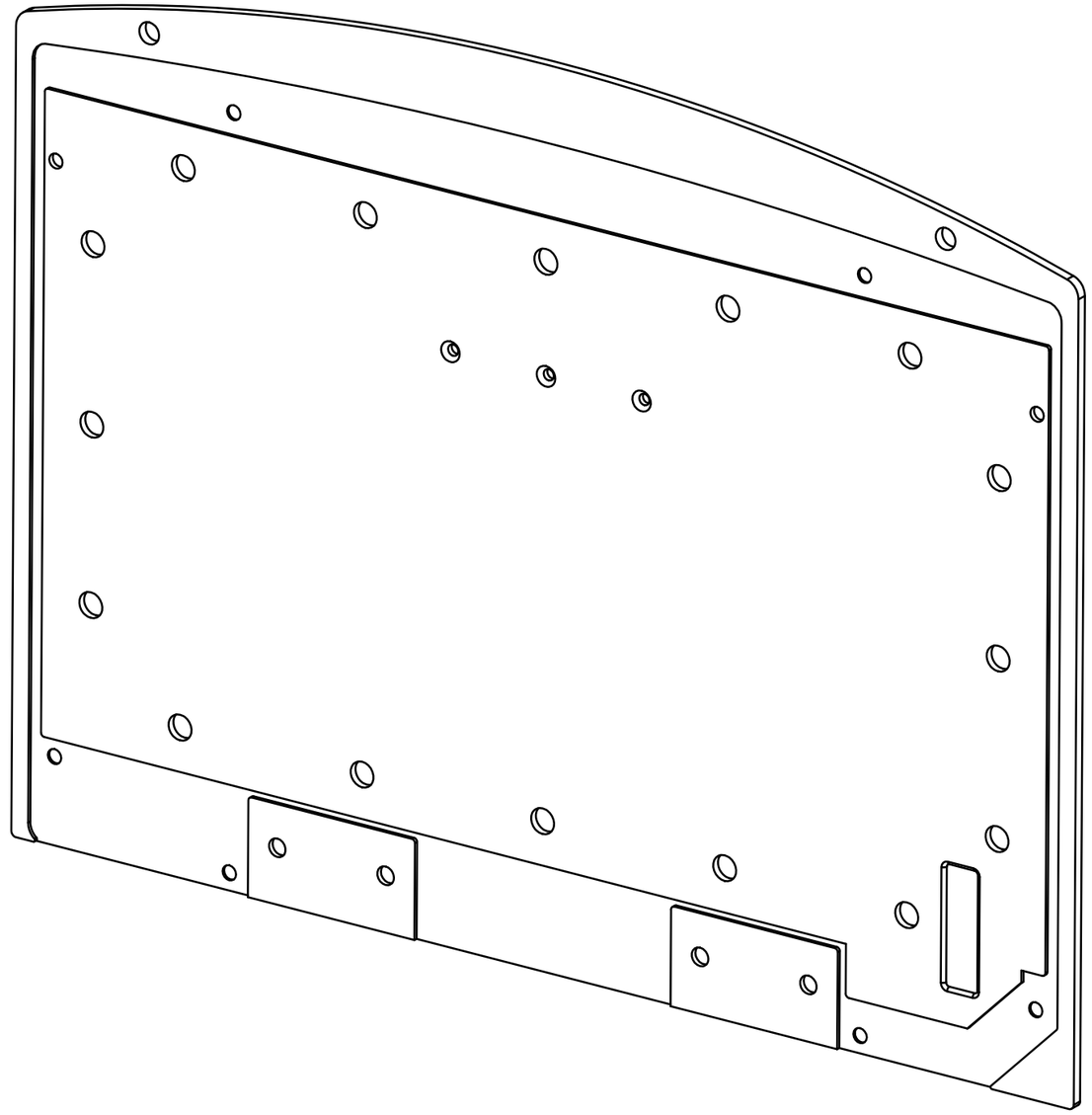

NOTE

1. AVOID SHARP CORNERS AND EDGES
2. ALL BURRS MUST BE REMOVED
3. DIMENSIONLESS FEATURES TO BE MEASURED FROM IGS FILE

REV	CN.NO.	DATE	DESCRIPTION	CHECKED	APPROVED	NEXT ASSEMBLY	ITEM	QTY
4								
3								
2								
1								
0		19.08.16	ORIGINAL			DSA 36 109 0 022	4	1

MATERIAL: ALUMINIUM HE-30	FINISH: YELLOW CC COATING	PROJ.	TOL.GEN. ± IS:2102 TOL.AXIS. ± (MED)	PRJ. 109	
DRAWN: THUSHANTH	CHECKED	APPROVED	DIMNS: mm / SCALE: NTS	TITLE: KEY BOARD BACK PLATE	
DATE 19.08.16	DATE	DATE	DRG. NUMBER: DPD 36 109 0 108	SIZE: A3	ISSUE: 1
KERALA STATE ELECTRONICS DEVELOPMENT CORPORATION LIMITED.				NO.OF SHEETS: 4 / 4	

RESTRICTED

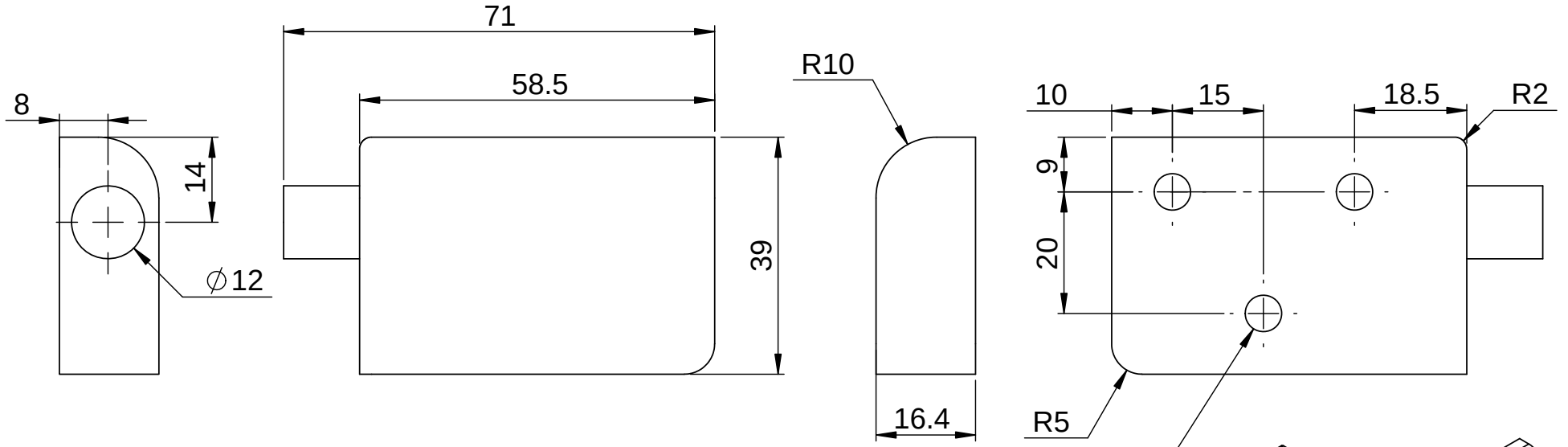

NOTE:

AVOID SHARP EDGES AND CORNERS

4								
3								
2								
1								
0		21.09.17	ORIGINAL			DSA 36 109 0 022	17	01
REV	CN.NO.	DATE	DESCRIPTION	CHECKED	APPROVED	NEXT ASSEMBLY	ITEM	QTY

MATERIAL: ALUMINIUM HE-30	FINISH: YELLOW CC COATING	PROJ.	TOL.GEN. ± IS: 2102 TOL.AXIS. ± (MED.)	PRJ. 109	
DRAWN: MALIKSAD	CHECKED	APPROVED	DIMNS: mm	SCALE: NTS	TITLE: KEY BOARD LEFT HINGE
DATE 21.09.17	DATE	DATE	DRG. NUMBER: DPD 36 109 0 220	SIZE: A4	ISSUE: 1
KERALA STATE ELECTRONICS DEVELOPMENT CORPORATION LIMITED				NO.OF SHEETS: 1 / 1	

RESTRICTED

RESTRICTED

RESTRICTED

DRILL ⌀6.2, ↧15 AND M6 HELICOIL TAP, 3 Nos

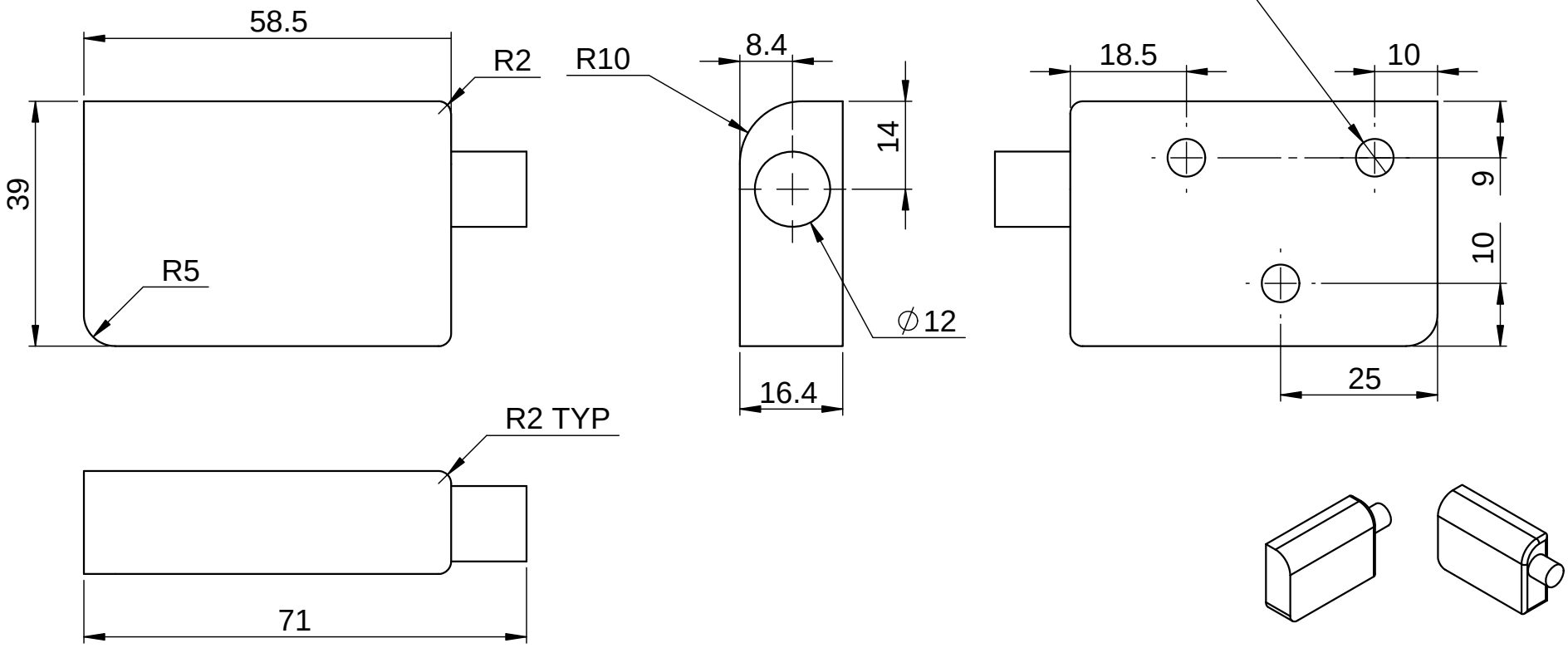

NOTE:

AVOID SHARP EDGES AND CORNERS.

REV	CN.NO.	DATE	DESCRIPTION	CHECKED	APPROVED	NEXT ASSEMBLY	ITEM	QTY
4								
3								
2								
1								
0		23.09.17	ORIGINAL			DSA 36 109 0 022	08	01

MATERIAL	FINISH	PROJ.		PRJ.
ALUMINIUM HE-30	YELLOW CC COATING		TOL.GEN. ± IS: 2102 TOL.AXIS. ± (MED.)	109

DRAWN	CHECKED	APPROVED	DIMNS	SCALE	TITLE
MALIKSAD			mm	NTS	KEY BOARD RIGHT HINGE
DATE 23.09.17	DATE	DATE	DRG. NUMBER		SIZE: A4 / ISSUE: 1
KERALA STATE ELECTRONICS DEVELOPMENT CORPORATION LIMITED			DPD 36 109 0 111		NO.OF SHEETS: 1 / 1

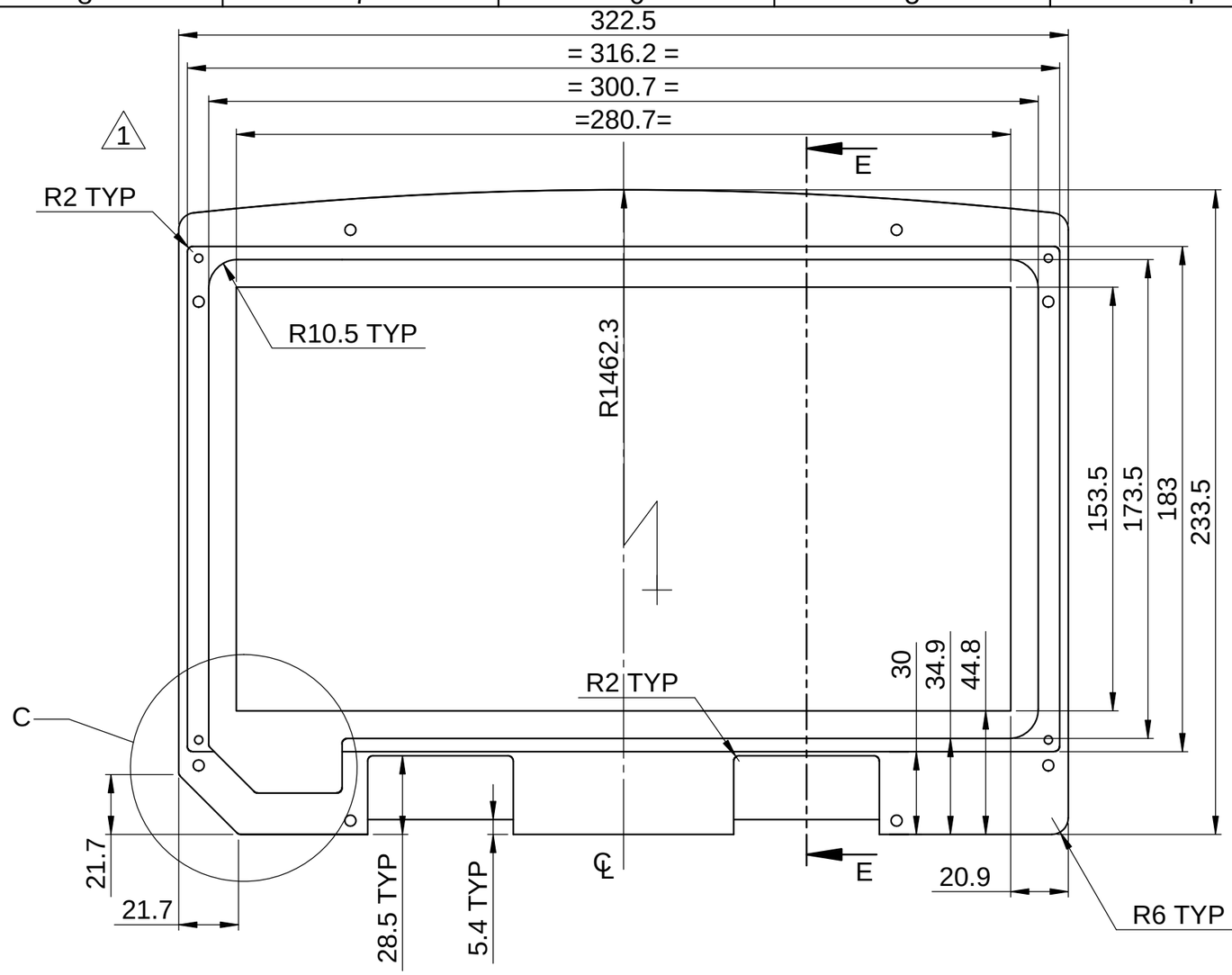

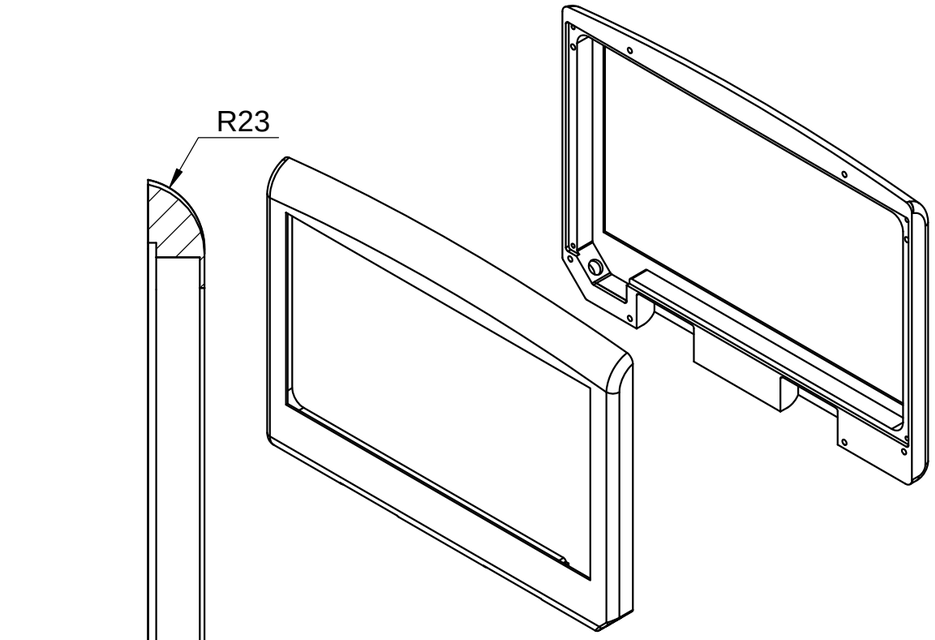

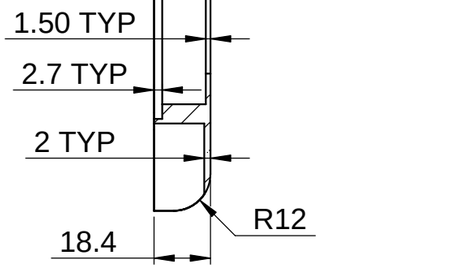

SECTION E-E

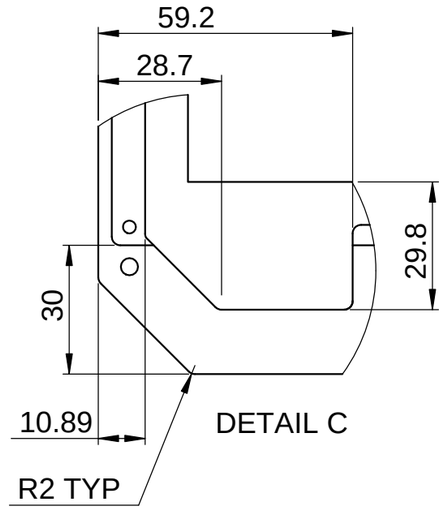

DETAIL C

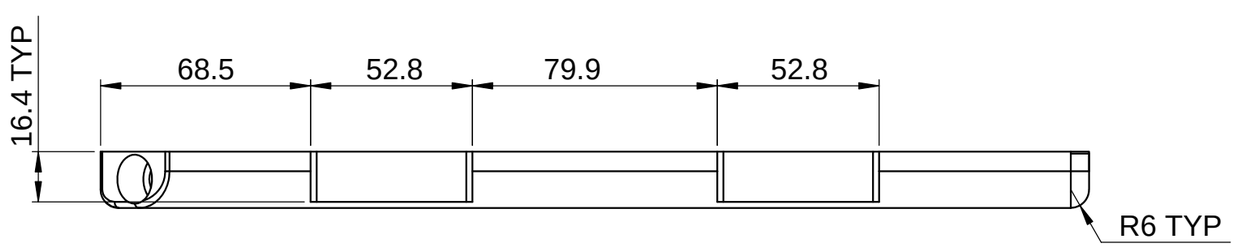

NOTE

1. AVOID SHARP CORNERS AND EDGES
2. ALL BURRS MUST BE REMOVED
3. DIMENSIONLESS FEATURES TO BE MEASURED FROM IGS

REV	CN.NO.	DATE	DESCRIPTION	CHECKED	APPROVED	NEXT ASSEMBLY	ITEM	QTY
4								
3								
2								
1		22.08.19	REVISED					
0		06.08.16	ORIGINAL			DSA 36 109 0 022	1	1

MATERIAL: ALUMINIUM HE-30	FINISH: YELLOW CC COATING	PROJ.	TOL.GEN. ± IS:2102 TOL.AXIS. ± (MED)	PRJ. 109	
DRAWN: MALIKSAD	CHECKED	APPROVED	DIMNS: mm / SCALE: NTS	TITLE: KEY BOARD TRAY	
DATE 22.08.19	DATE	DATE	DRG. NUMBER: DPD 36 109 0 113	SIZE: A3	ISSUE: 1
KERALA STATE ELECTRONICS DEVELOPMENT CORPORATION LIMITED.				NO.OF SHEETS: 1/2	

SL NO	REF	DESCRIPTION	QTY
1	A	∅ 4.1↧13, M4 HELICOIL TAP	8
2	B	∅ 3.1↧13, M3 HELICOIL TAP	4

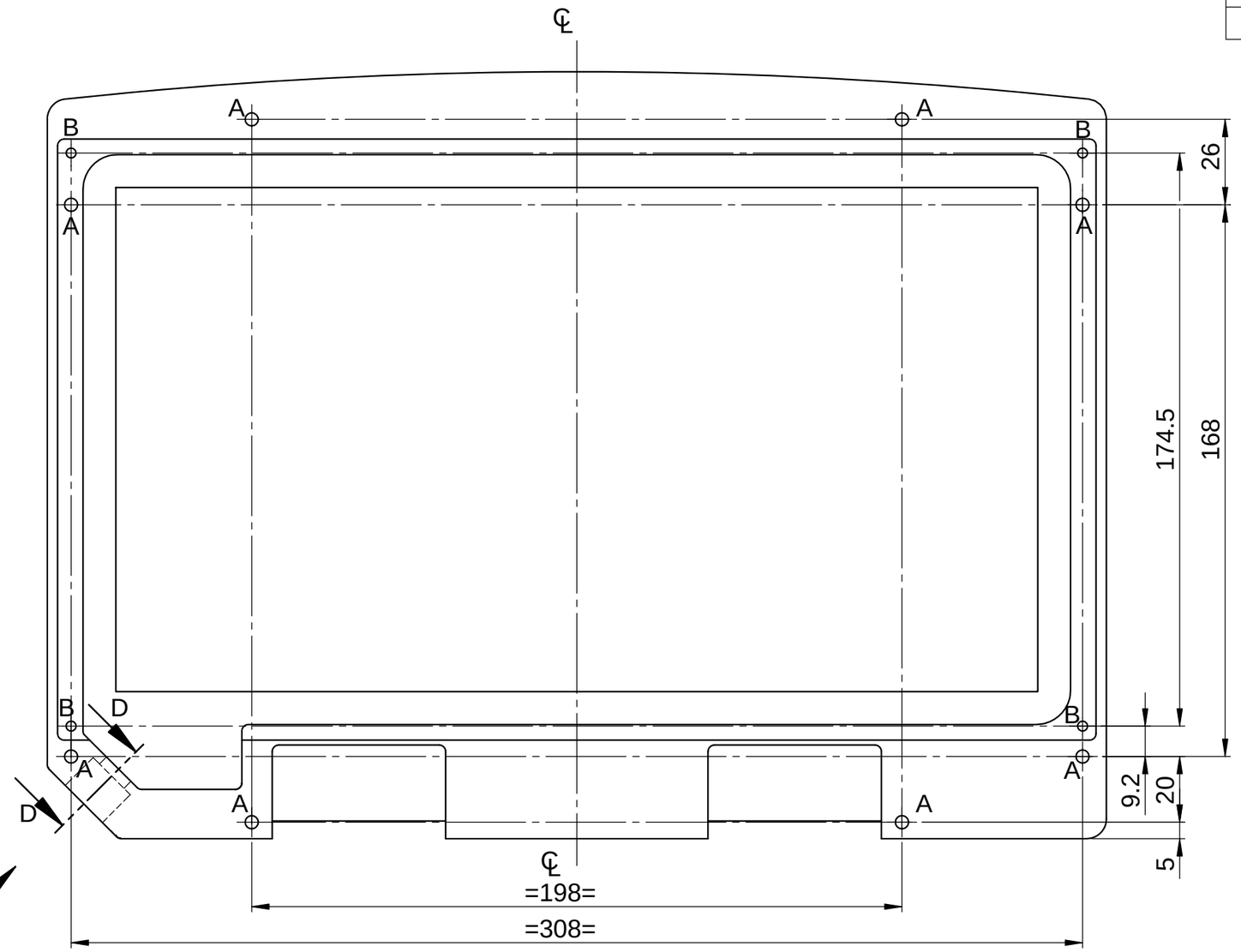

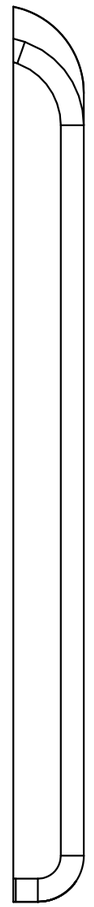

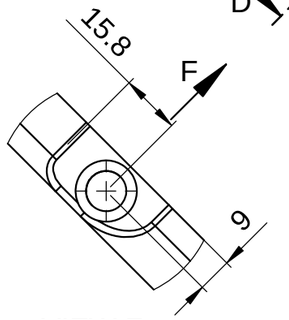

VIEW F

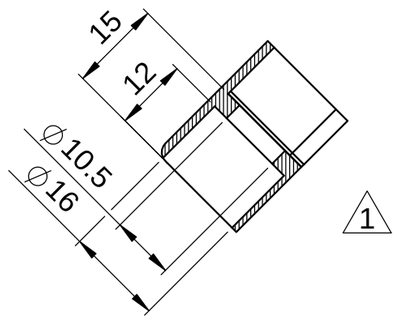

SECTION D-D

REV	CN.NO.	DATE	DESCRIPTION	CHECKED	APPROVED	NEXT ASSEMBLY	ITEM	QTY
4								
3								
2								
1		22.08.19	REVISED					
0		06.08.16	ORIGINAL			DSA 36 109 0 022	1	1

MATERIAL: ALUMINIUM HE 30	FINISH: YELLOW CC COATING	PROJ.	TOL.GEN. ± IS:2102 TOL.AXIS. ± (MED)
PRJ.: 109			

DRAWN	CHECKED	APPROVED	DIMNS	SCALE
MALIKSAD			mm	NTS
DATE 22.08.19	DATE	DATE		

TITLE: KEY BOARD TRAY

KERALA STATE ELECTRONICS DEVELOPMENT CORPORATION LIMITED

DRG. NUMBER: DPD 36 109 0 113

SIZE	ISSUE
A3	1
NO.OF SHEETS	2 / 2

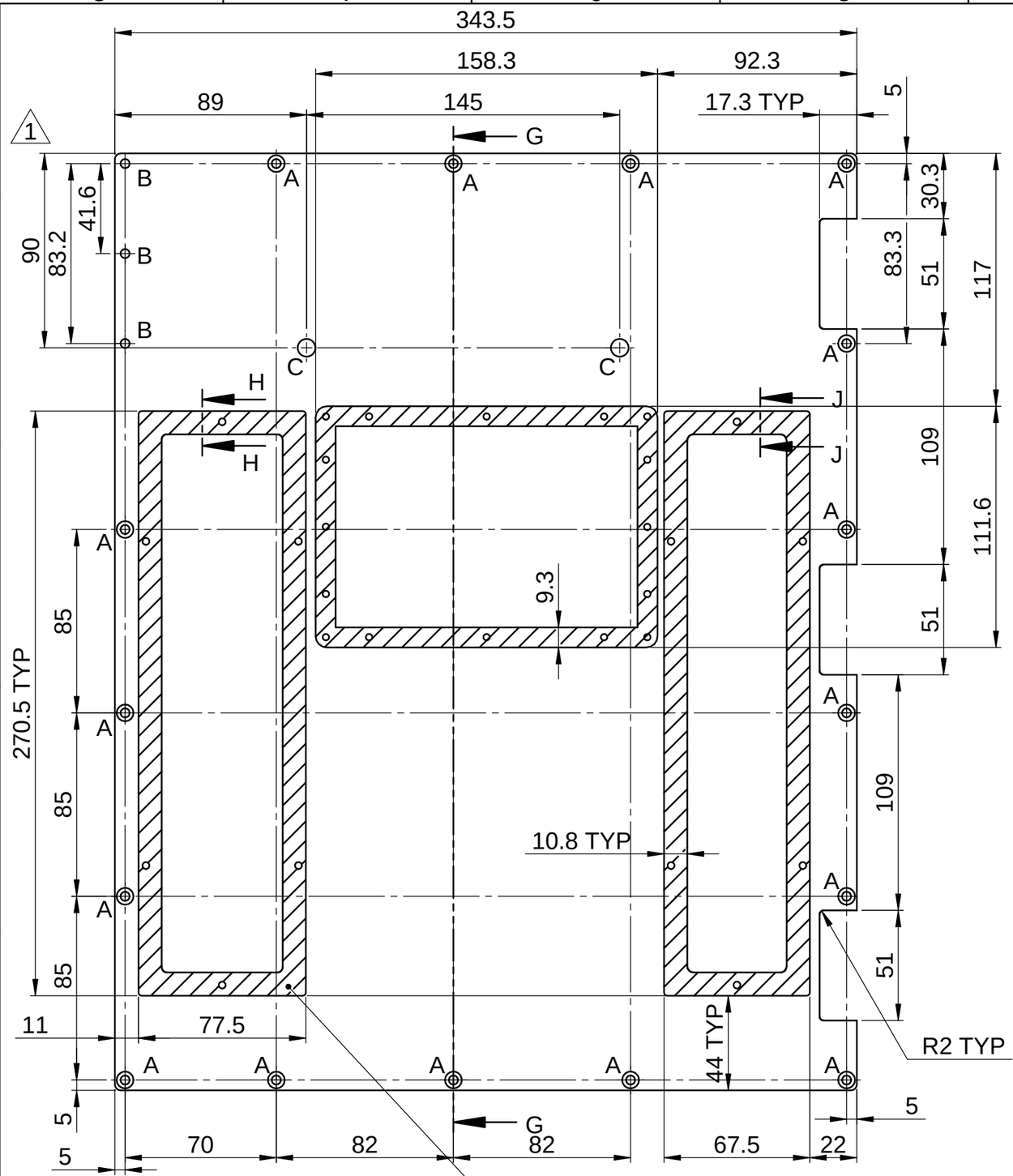

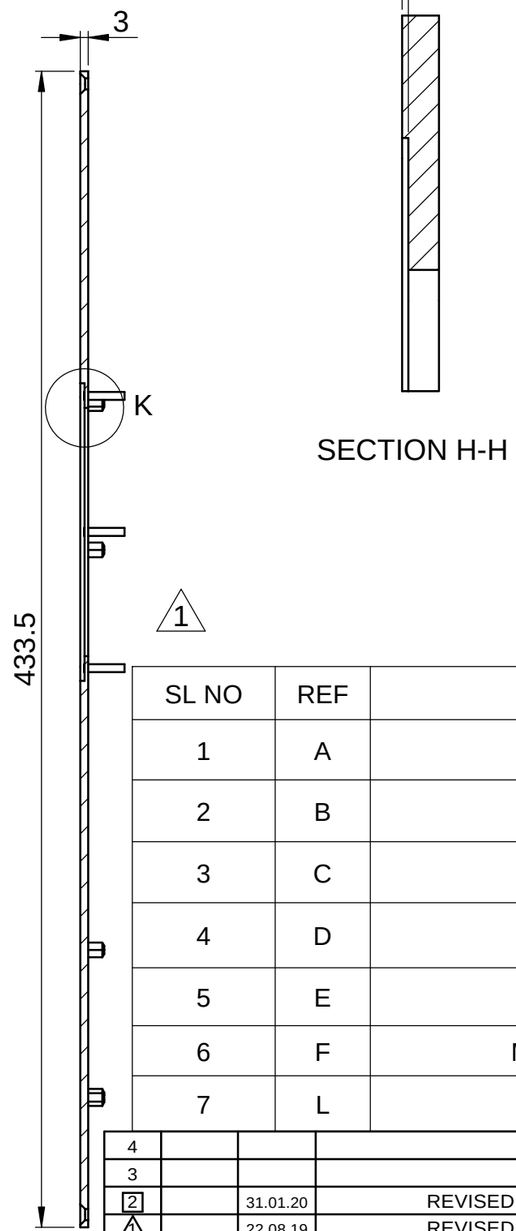

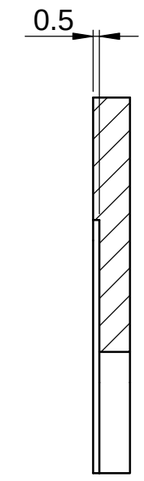

SECTION H-H

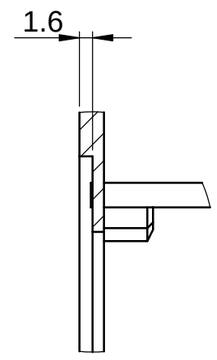

DETAIL K

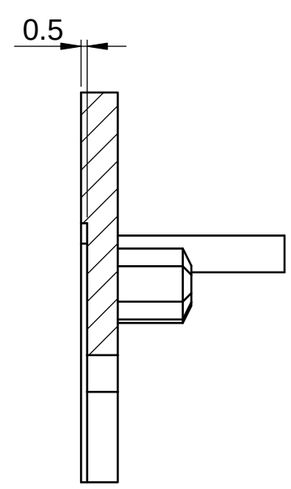

SECTION J-J

SL NO	REF	DESCRIPTION	QTY
1	A	∅4.2 ⌵ ∅7.8	16
2	B	∅4.2	3
3	C	∅8.2	2
4	D	M3x6 BLIND NUT	2 10
5	E	∅3 HOLES FOR RIVET	2 8
6	F	M3x10 CLINCH SCREW	8
7	L	∅3.2	2 2

REV	CN.NO.	DATE	DESCRIPTION	CHECKED	APPROVED	NEXT ASSEMBLY	ITEM	QTY
4								
3								
2		31.01.20	REVISED					
1		22.08.19	REVISED					
0		19.08.17	ORIGINAL			DSA 36 109 0 019	1	1

MATERIAL: ALUMINIUM H32-5052	FINISH: YELLOW CC COATING	PROJ.	TOL.GEN. ± IS:2102 TOL.AXIS. ± (MED)
PRJ. 109			

DRAWN	CHECKED	APPROVED	DIMNS	SCALE	TITLE
MALIKSAD			mm	NTS	LEFT PLATE
DATE 22.08.19	DATE	DATE			

KERALA STATE ELECTRONICS DEVELOPMENT CORPORATION LIMITED

DRG. NUMBER: DPD 36 109 0 037

SIZE	ISSUE
A3	1
NO.OF SHEETS	1 / 2

NOTE

1. AVOID SHARP CORNERS AND EDGES
2. ALL BURRS MUST BE REMOVED

HATCHED AREA TO BE MASKED FROM PAINTING

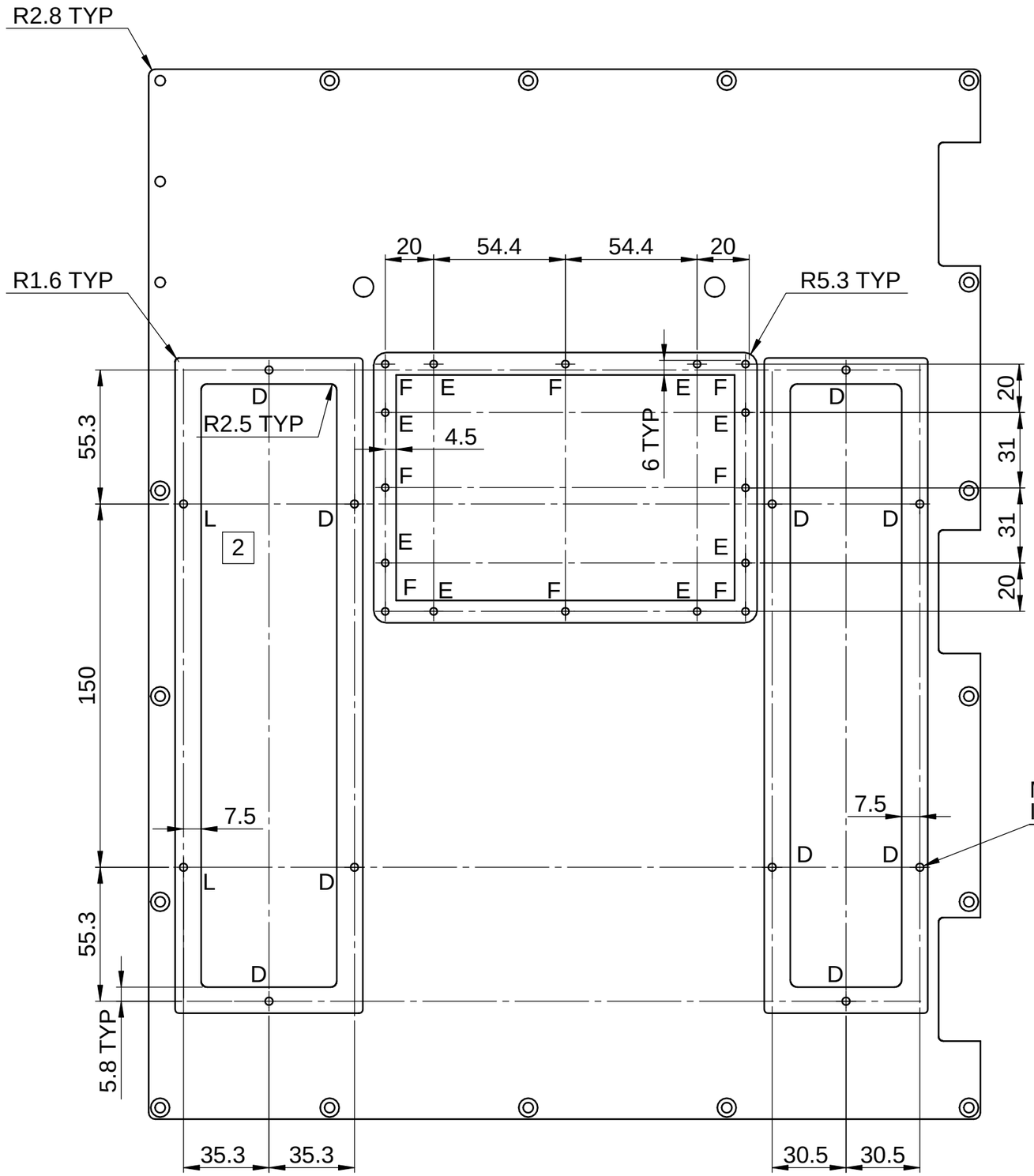

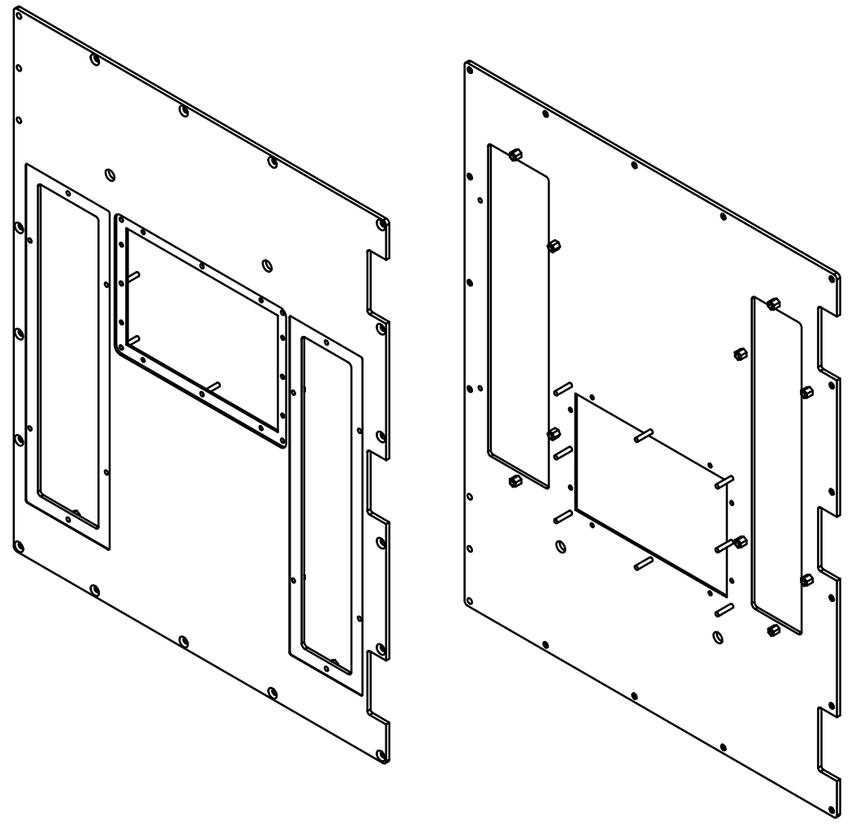

REV	CN.NO.	DATE	DESCRIPTION	CHECKED	APPROVED	NEXT ASSEMBLY	ITEM	QTY
4								
3								
2		31.01.20	REVISED					
1		22.08.19	REVISED					
0		19.08.17	ORIGINAL			DSA 36 109 0 019	1	1

MATERIAL: ALUMINIUM H32-5052	FINISH: YELLOW CC COATING	PROJ.	TOL.GEN. ± IS:2102 TOL.AXIS. ± (MED)	PRJ. 109	
DRAWN: MALIKSAD	CHECKED	APPROVED	DIMNS: mm	SCALE: NTS	TITLE: LEFT PLATE
DATE 22.08.19	DATE	DATE	DRG. NUMBER: DPD 36 109 0 037	SIZE: A3	ISSUE: 1
KERALA STATE ELECTRONICS DEVELOPMENT CORPORATION LIMITED.				NO.OF SHEETS: 2 / 2	

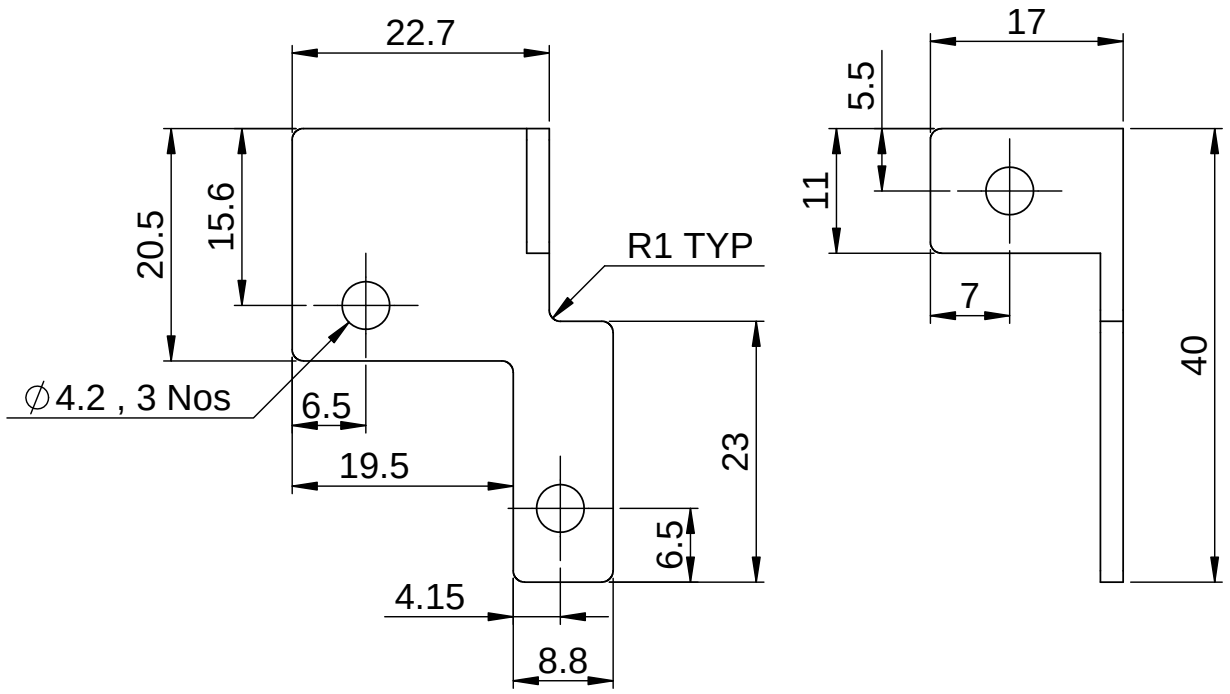

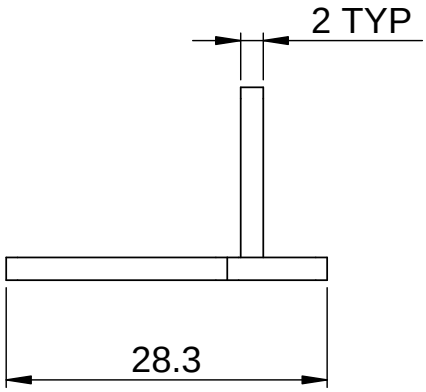

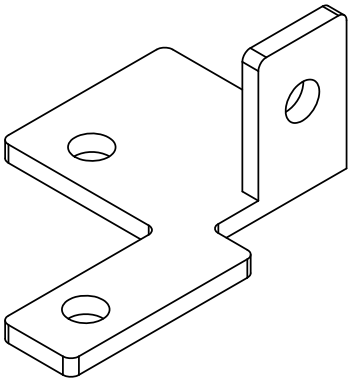

REV	CN.NO.	DATE	DESCRIPTION	CHECKED	APPROVED	NEXT ASSEMBLY	ITEM	QTY
4								
3								
2								
1								
0		17.10.17	ORIGINAL			DSA 36 109 0 011		1

MATERIAL: SS 316	FINISH:	PROJ.	TOL.GEN. ± IS:2102 TOL.AXIS. ± (MED)	PRJ. 109	
DRAWN: MALIKSAD	CHECKED:	APPROVED:	DIMNS: mm	SCALE: NTS	TITLE: LOCKER
DATE 16.09.17	DATE	DATE	DRG. NUMBER: DPD 36 109 0 272	SIZE: A4	ISSUE: 1
KERALA STATE ELECTRONICS DEVELOPMENT CORPORATION LIMITED				NO.OF SHEETS: 1 / 1	

RESTRICTED

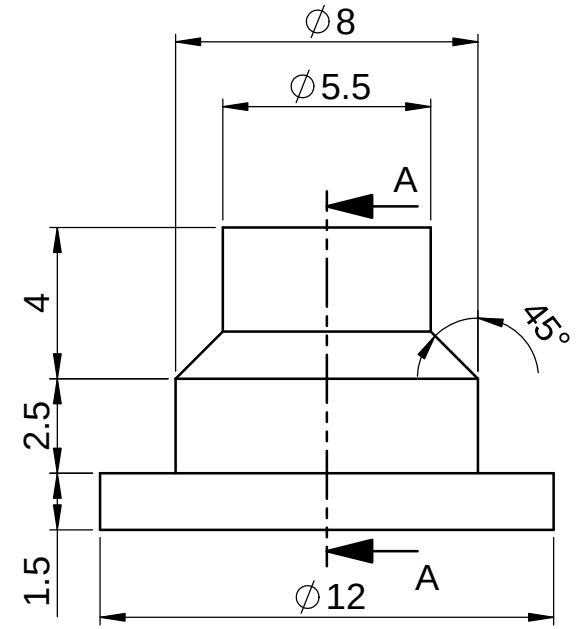

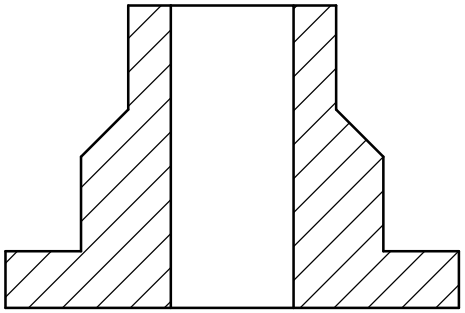

SECTION A-A

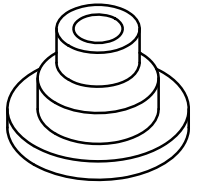

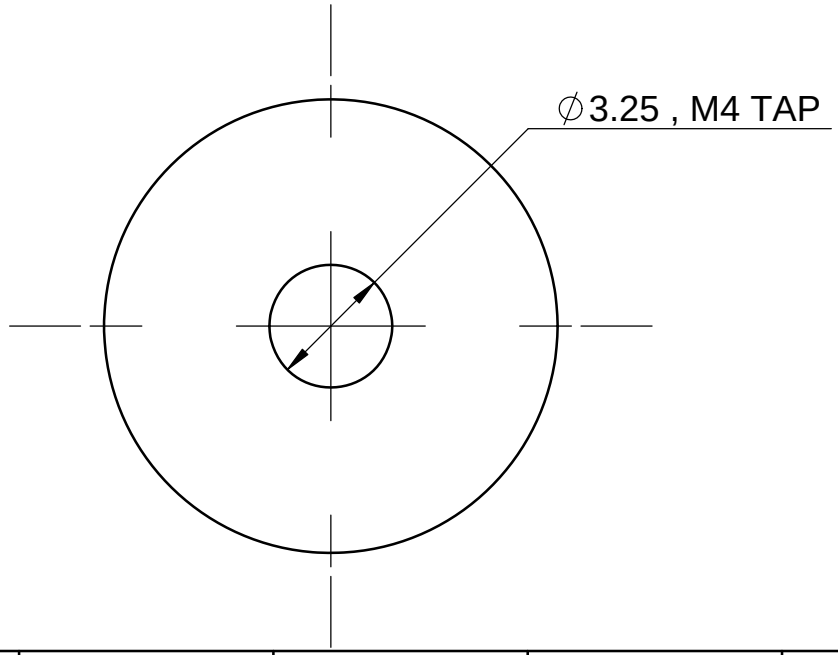

REV	CN.NO.	DATE	DESCRIPTION	CHECKED	APPROVED	NEXT ASSEMBLY	ITEM	QTY
4								
3								
2								
1								
0		13.11.19	ORIGINAL			-	-	-

MATERIAL	FINISH	PROJ.	TOL.GEN. ± IS: 2102 TOL.AXIS. ± (MED.)	PRJ.
SS-316	-			109

DRAWN	CHECKED	APPROVED	DIMNS	SCALE	TITLE
MALIKSAD	MANJULAL	VK	mm	NTS	LOCKING LEVER BUSH

DATE 13.11.19	DATE	DATE	DRG. NUMBER	SIZE	ISSUE
KERALA STATE ELECTRONICS DEVELOPMENT CORPORATION LIMITED			DPD 36 109 0 277	A4	1
				NO.OF SHEETS	1 / 1

RESTRICTED

RESTRICTED

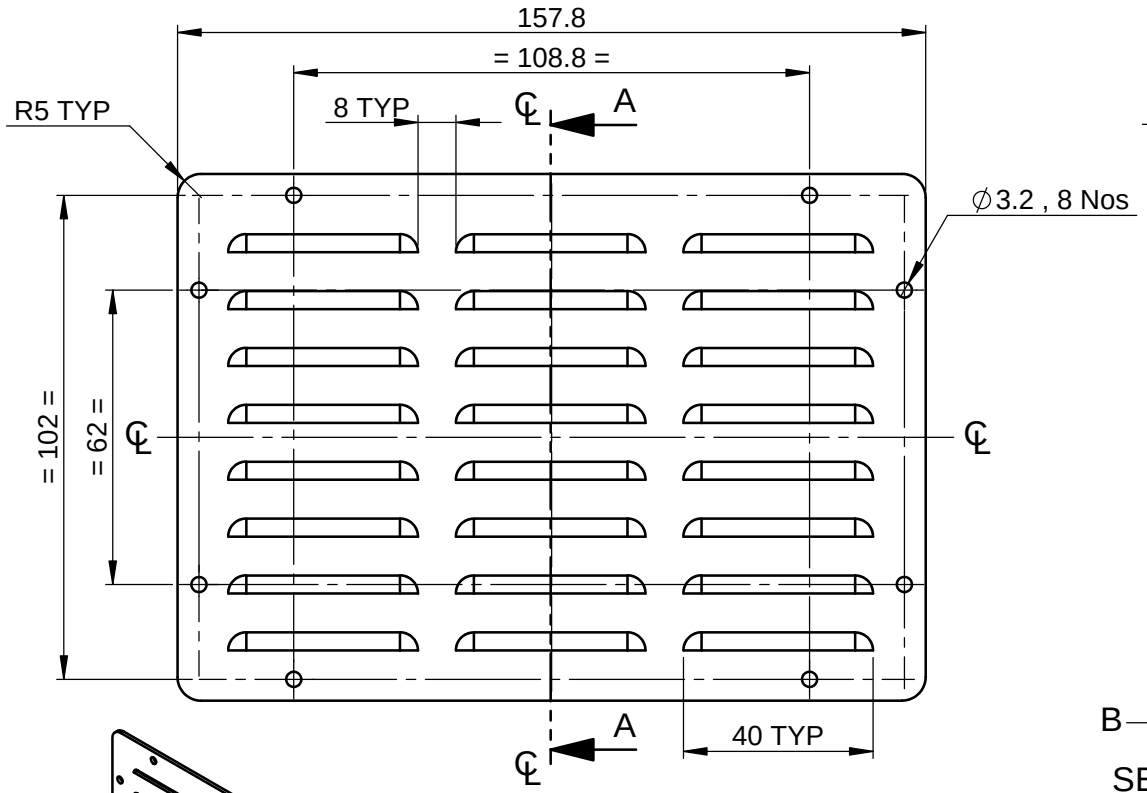

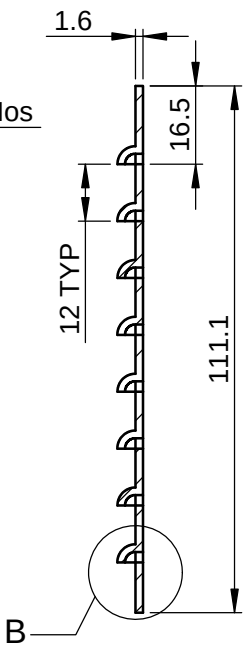

SECTION A-A

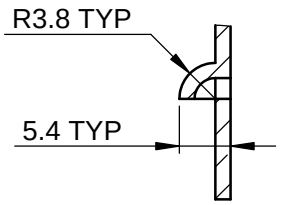

DETAIL B

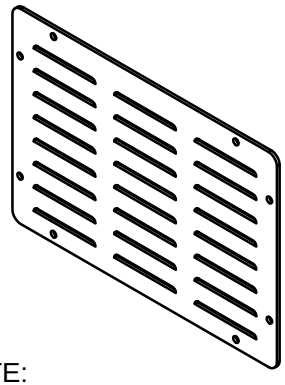

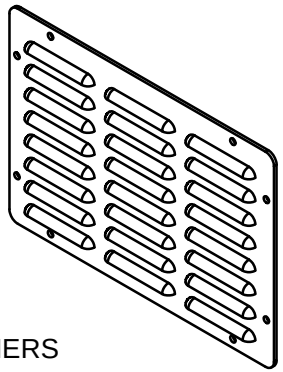

NOTE:

AVOID SHARP EDGES AND CORNERS

REV	CN.NO.	DATE	DESCRIPTION	CHECKED	APPROVED	NEXT ASSEMBLY	ITEM	QTY
4								
3								
2								
1						DSA 36 109 0 015	09	1
0		26.08.19	ORIGINAL			DSA 36 109 0 019	03	1

MATERIAL	FINISH	PROJ.	TOL.GEN. ± IS: 2102 TOL.AXIS. ± (MED.)	PRJ.
1.6 THICK ALUMINIUM SHEET AL 5050-H32	YELLOW CC COATING			109

DRAWN	CHECKED	APPROVED	DIMNS	SCALE	TITLE
MALIKSAD			mm	NTS	LOUVERS PLATE
DATE 26.08.19	DATE	DATE	DRG. NUMBER		SIZE A4 / ISSUE 1
KERALA STATE ELECTRONICS DEVELOPMENT CORPORATION LIMITED			DPD 36 109 0 062		NO.OF SHEETS 1 / 1

RESTRICTED

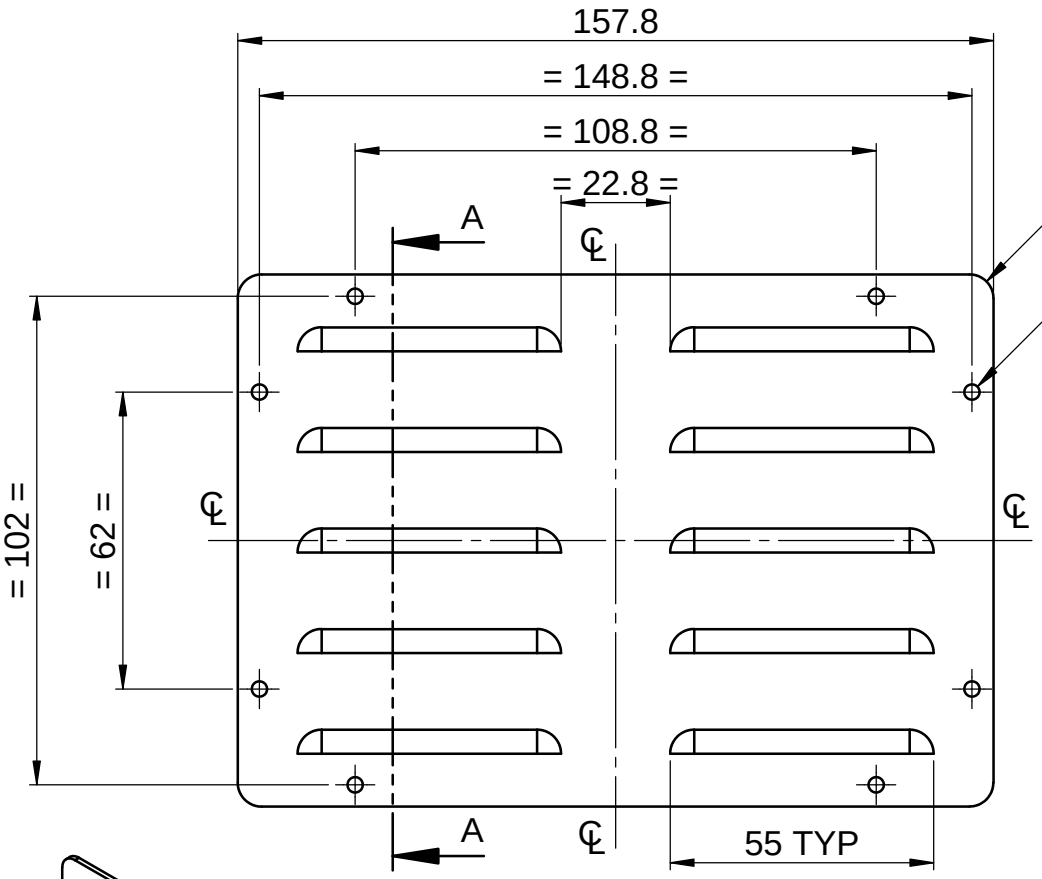

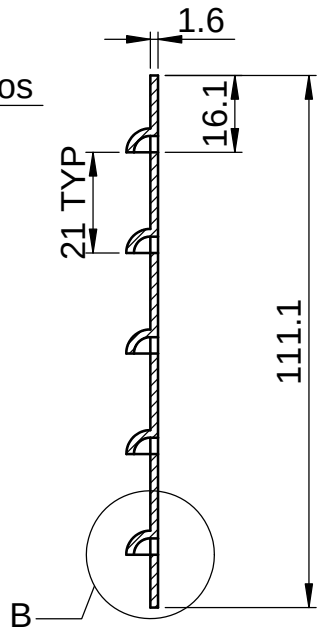

SECTION A-A

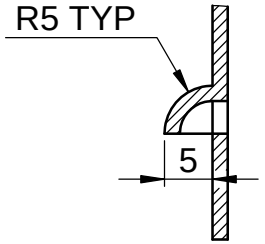

DETAIL B

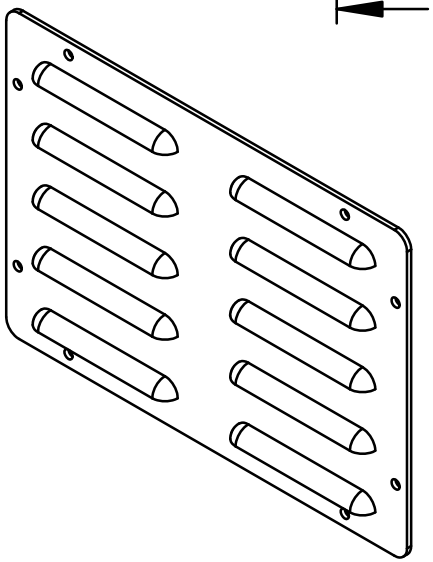

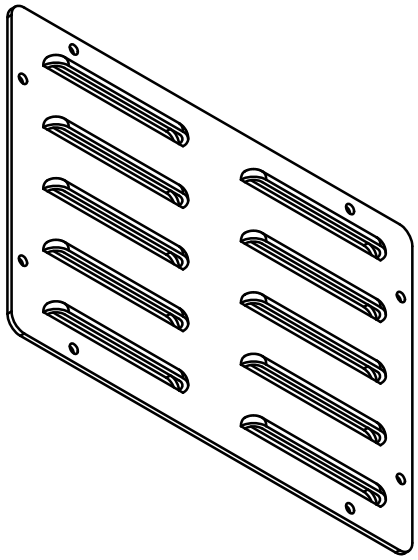

4								
3								
2								
1								
0		17.10.17	ORIGINAL			DSA 36 109 0 019	3	1
REV	CN.NO.	DATE	DESCRIPTION	CHECKED	APPROVED	NEXT ASSEMBLY	ITEM	QTY

MATERIAL: 1.6 THICK ALUMINIUM SHEET AL. 5052-H32	FINISH: YELLOW CC COATING	PROJ.	TOL.GEN. ± IS: 2102 TOL.AXIS. ± (MED.)	PRJ. 109	
DRAWN: NANDHU	CHECKED	APPROVED	DIMNS: mm	SCALE: NTS	TITLE: LOUVERS PLATE
DATE 17.10.17	DATE	DATE	DRG. NUMBER: DPD 36 109 0 062	SIZE: A4	ISSUE: 1
KERALA STATE ELECTRONICS DEVELOPMENT CORPORATION LIMITED				NO.OF SHEETS: 1 / 1	

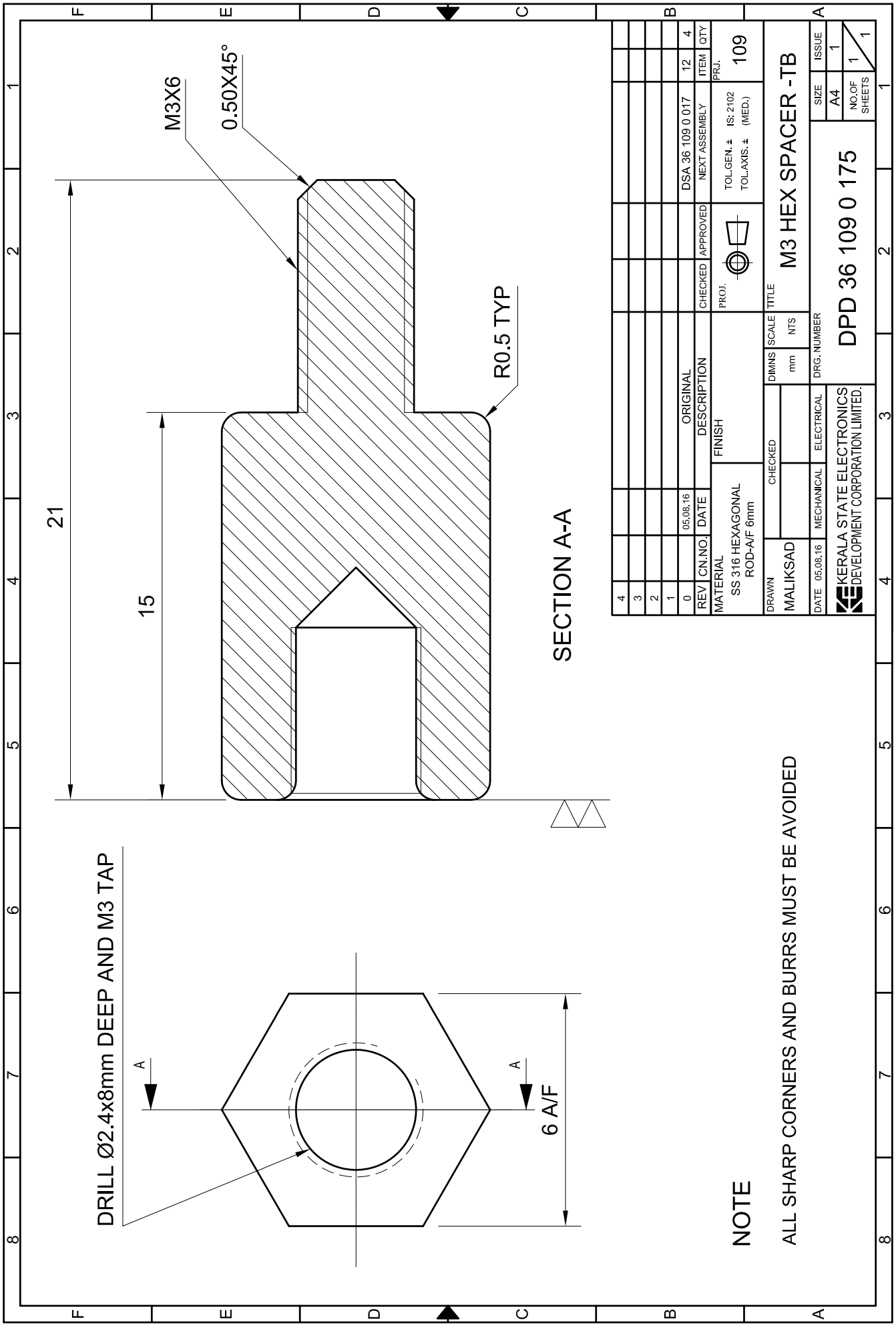
M3X6
0.50X45°
R0.5 TYP
21
15
SECTION A-A
DRILL Ø2.4x8mm DEEP AND M3 TAP
A
A
6 A/F
NOTE
ALL SHARP CORNERS AND BURRS MUST BE AVOIDED
4
3
2
1
0
REV
CN.NO.
DATE
ORIGINAL
05.08.16
DESCRIPTION
CHECKED
APPROVED
DSA 36 109 0 017
12
4
ITEM
QTY
NEXT ASSEMBLY
PRJ.
109
TOL.GEN. ± IS: 2102
TOL.AXIS. ± (MED.)
PROJ.
MATERIAL
SS 316 HEXAGONAL
ROD-A/F 6mm
FINISH
DRAWN
MALIKSAD
CHECKED
DIMNS
mm
SCALE
NTS
TITLE
M3 HEX SPACER -TB
DATE 05.08.16
MECHANICAL
ELECTRICAL
DRG. NUMBER
DPD 36 109 0 175
KERALA STATE ELECTRONICS
DEVELOPMENT CORPORATION LIMITED.
SIZE
A4
ISSUE
1
NO.OF SHEETS
1
1

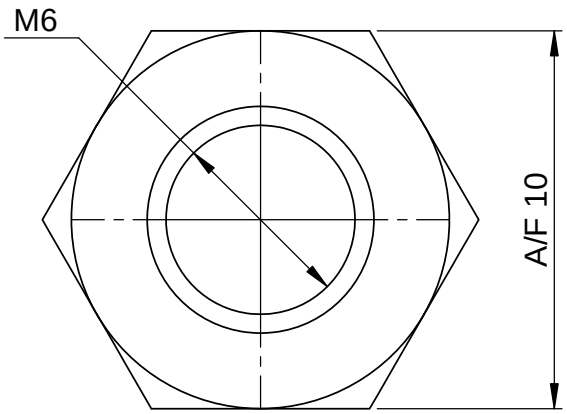

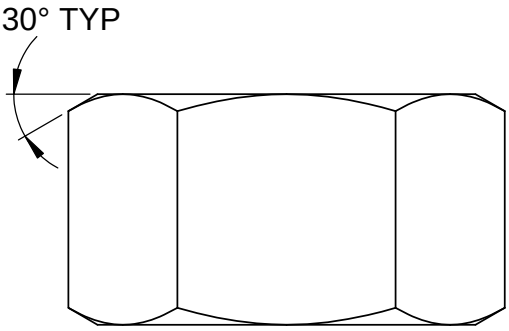

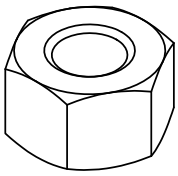

NOTE:

AVOID SHARP EDGES AND CORNERS

REV	CN.NO.	DATE	DESCRIPTION	CHECKED	APPROVED	NEXT ASSEMBLY	ITEM	QTY
4								
3								
2								
1								
0		19.08.17	ORIGINAL			DSA 36 109 0 016	4	3

MATERIAL	FINISH	PROJ.		PRJ.
BRASS	-		TOL.GEN. ± IS:2102 TOL.AXIS. ± (MED)	109

DRAWN	CHECKED	APPROVED	DIMNS	SCALE	TITLE
MALIKSAD			mm	NTS	M6 EARTH STUD NUT-BRASS

DATE 19.08.17	DATE	DATE	DRG. NUMBER	SIZE	ISSUE
KERALA STATE ELECTRONICS DEVELOPMENT CORPORATION LIMITED			DPD 36 109 0 116	A4	1
				NO.OF SHEETS	1 / 1

RESTRICTED

DEVIATION FOR NON - TOLERANCED DIMENSIONS (IS : 2102 - MEDIUM)											
ABOVE	0.5	6	30	120	315	1000	LENGTH IN mm OF SHORTER SIDE OF ANGLE				
UP TO	6	30	120	315	1000	2000	ABOVE & UP TO	0.5 - 6	6 - 30	30 - 120	120 - 400
TOL.	±0.1	±0.2	±0.3	±0.5	±0.8	±1.2	TOL.	± 1°	± 30'	± 20'	± 10'

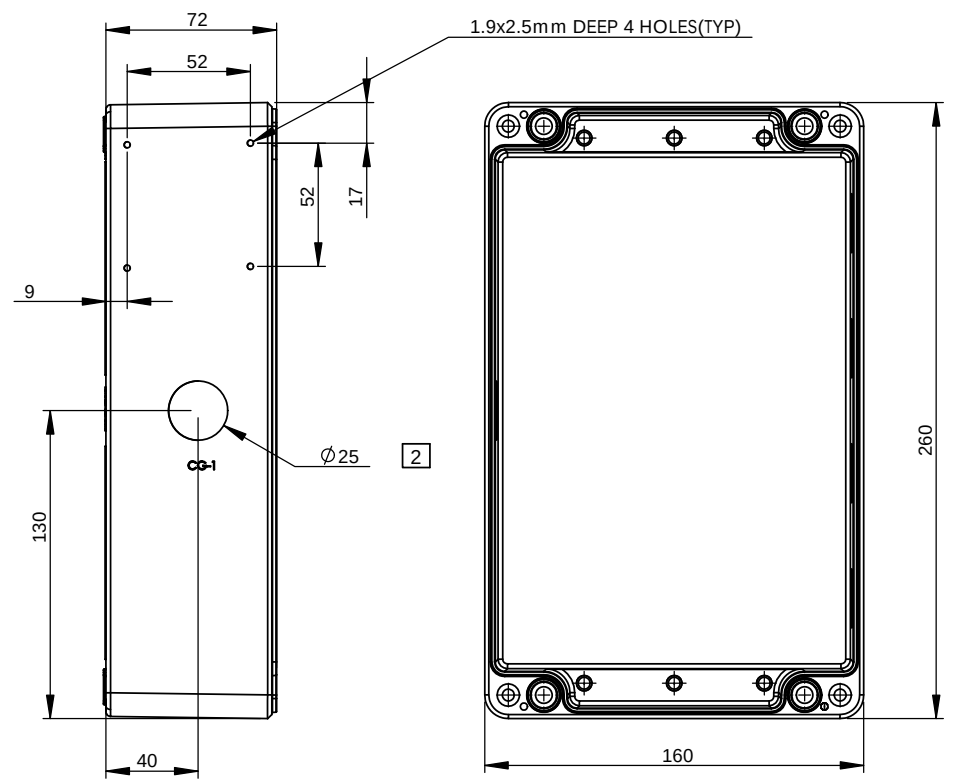

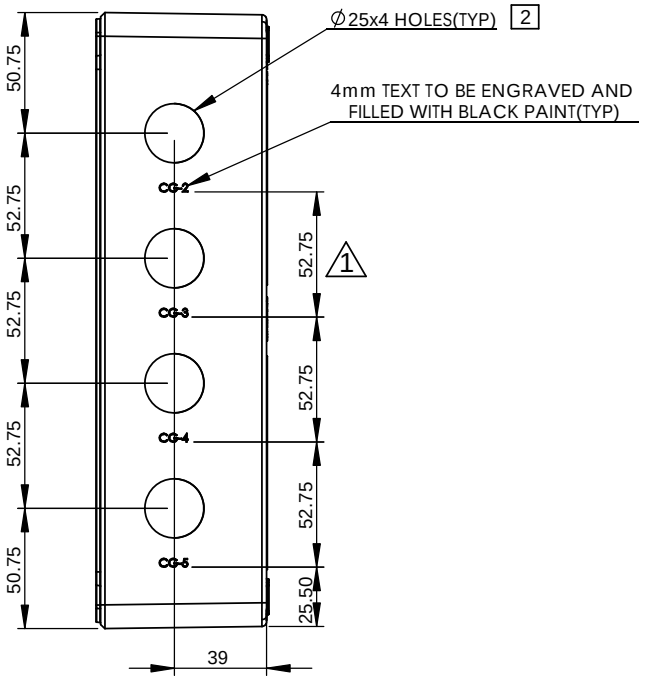

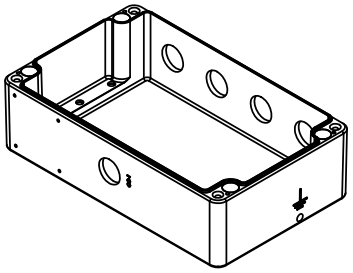

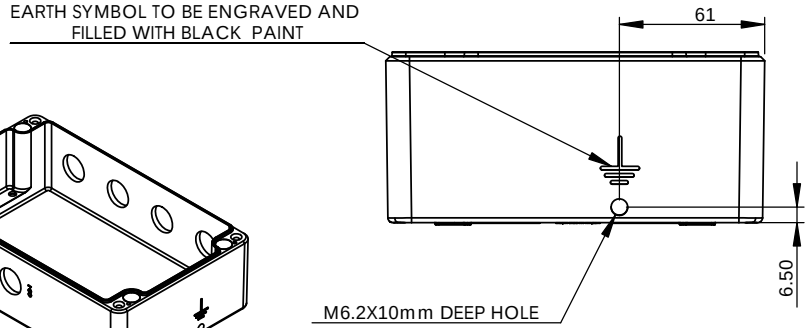

BASE

REV	CN.NO.	DATE	DESCRIPTION	CHECKED	APPROVED	NEXT ASSEMBLY	ITEM	QTY
4								
3								
2		07.08.15	REVISED			DSA 36 094 0 026	1	1
1		27.07.15	REVISED			DSA 36 094 0 026	1	1
0		17.06.15	ORIGINAL			DSA 36 094 0 026	1	1

MATERIAL: ROSE PART NO:01.16 26 09	FINISH:	PROJ.	TOL.GEN. ± IS: 2102 TOL.AXIS. ± (MED.)	PRJ. 094
DRAWN: MALIKSAD	CHECKED	DIMNS: mm	SCALE: NTS	TITLE: MODIFICATION ON JB ENCLOSURE
DATE 07.08.15	MECHANICAL / ELECTRICAL	DRG. NUMBER: DPD 36 094 0 600	SIZE: A4	ISSUE: 1
KERALA STATE ELECTRONICS DEVELOPMENT CORPORATION LIMITED			NO.OF SHEETS: 1 / 2	

RESTRICTED

XX

DEVIATION FOR NON - TOLERANCED DIMENSIONS (IS : 2102 - MEDIUM)											
ABOVE	0.5	6	30	120	315	1000	LENGTH IN mm OF SHORTER SIDE OF ANGLE				
UP TO	6	30	120	315	1000	2000	ABOVE & UP TO	0.5 - 6	6 - 30	30 - 120	120 - 400
TOL.	±0.1	±0.2	±0.3	±0.5	±0.8	±1.2	TOL.	± 1°	± 30'	± 20'	± 10'

RESTRICTED

RESTRICTED

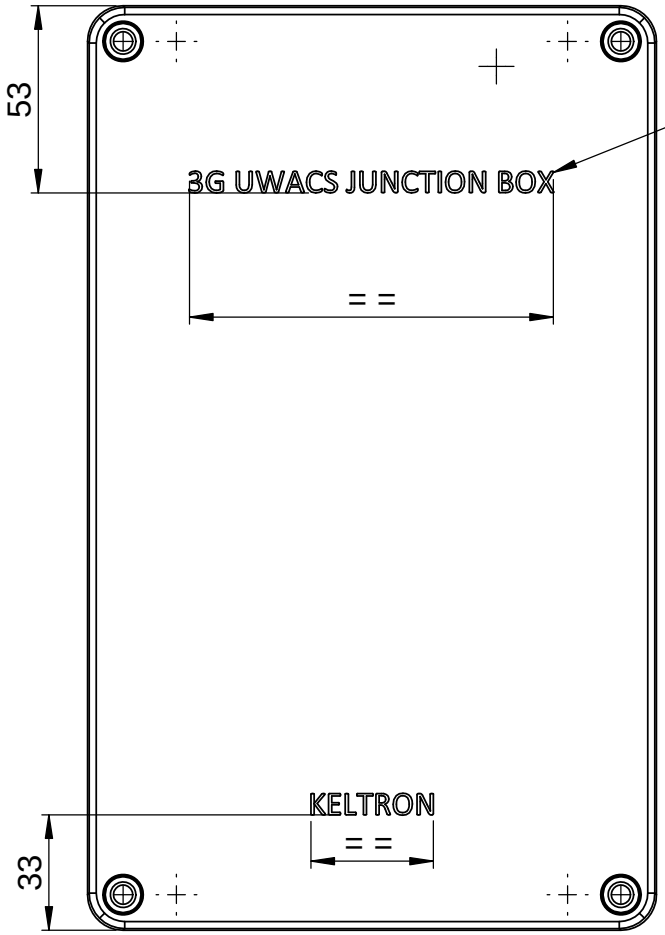

6 mm HEIGHT TEXT TO BE ENGRAVED AND FILL WITH BLACK PAINT (TYP)

COVER

REV	CN.NO.	DATE	DESCRIPTION	CHECKED	APPROVED	NEXT ASSEMBLY	ITEM	QTY
4								
3								
2		07.08.15	REVISED			DSA 36 094 0 026	1	1
1		27.07.15	REVISED			DSA 36 094 0 026	1	1
0		19.06.15	ORIGINAL			DSA 36 094 0 026	1	1

MATERIAL: ROSE PART NO: 01.16 26 09	FINISH:	PROJ.	TOL.GEN. ± IS: 2102 TOL.AXIS. ± (MED.)	PRJ. 094	
DRAWN: MALIKSAD	CHECKED	DIMNS: mm	SCALE: NTS	TITLE: MODIFICATION ON JB ENCLOSURE	
DATE: 07.08.15	MECHANICAL / ELECTRICAL	DRG. NUMBER: DPD 36 094 0 600		SIZE: A4	ISSUE: 1
KERALA STATE ELECTRONICS DEVELOPMENT CORPORATION LIMITED				NO.OF SHEETS: 2 / 2	

XX

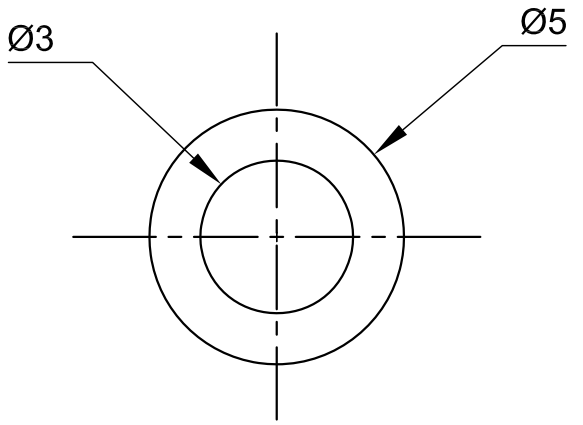

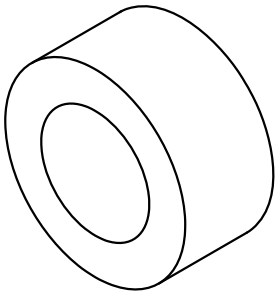

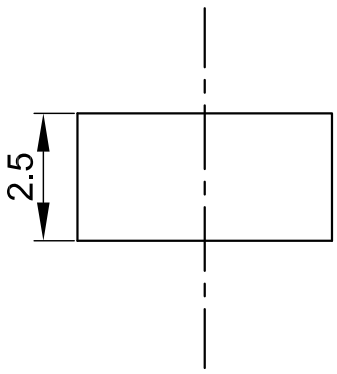

NOTE:
AVOID SHARP EDGES AND CORNERS

REV	CN.NO.	DATE	DESCRIPTION	CHECKED	APPROVED	NEXT ASSEMBLY	ITEM	QTY
4								
3								
2								
1								
0		03.05.17	ORIGINAL			DSA 36 109 1 100	45	2

MATERIAL	FINISH	PROJ.		PRJ.
NYLON	-		TOL.GEN. ± IS:2102 TOL.AXIS. ± (MED)	109

DRAWN	CHECKED	APPROVED	DIMNS	SCALE	TITLE
MALIKSAD			mm	NTS	NYLON SPACER 2.5mm
DATE 03.05.17	DATE	DATE			

KERALA STATE ELECTRONICS DEVELOPMENT CORPORATION LIMITED.

DRG. NUMBER: DPD 36 109 0 163

SIZE	ISSUE
A4	1
NO.OF SHEETS	1 / 1

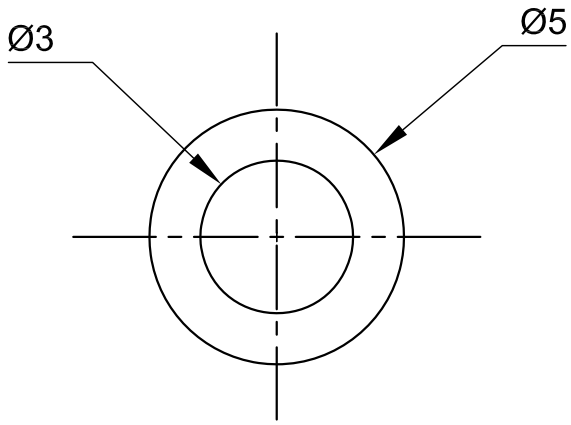

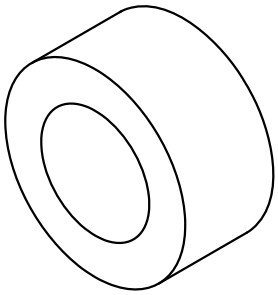

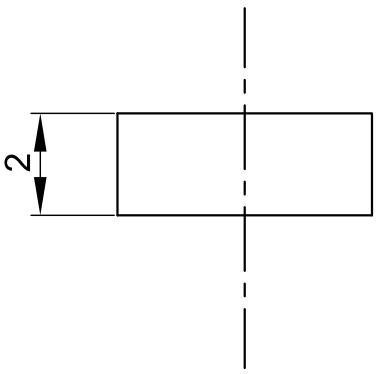

NOTE:
AVOID SHARP EDGES AND CORNERS

REV	CN.NO.	DATE	DESCRIPTION	CHECKED	APPROVED	NEXT ASSEMBLY	ITEM	QTY
4								
3								
2								
1								
0		03.05.17	ORIGINAL			DSA 36 109 1 102	26	2

MATERIAL	FINISH	PROJ.		PRJ.
NYLON	-		TOL.GEN. ± IS:2102 TOL.AXIS. ± (MED)	109

DRAWN	CHECKED	APPROVED	DIMNS	SCALE	TITLE
MALIKSAD			mm	NTS	NYLON SPACER 2mm
DATE 03.05.17	DATE	DATE			

KERALA STATE ELECTRONICS DEVELOPMENT CORPORATION LIMITED.

DRG. NUMBER: DPD 36 109 0 164

SIZE	ISSUE
A4	1
NO.OF SHEETS	1 / 1

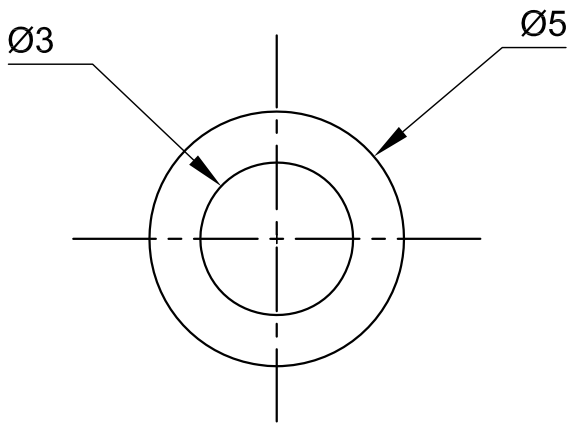

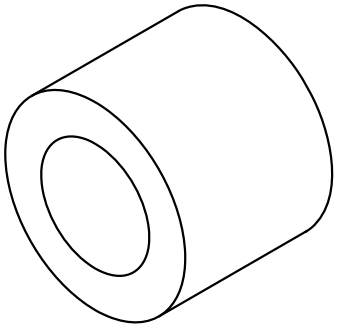

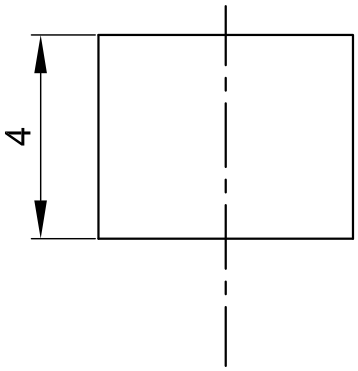

NOTE:
AVOID SHARP EDGES AND CORNERS

REV	CN.NO.	DATE	DESCRIPTION	CHECKED	APPROVED	NEXT ASSEMBLY	ITEM	QTY
4								
3								
2								
1								
0		03.05.17	ORIGINAL			DSA 36 109 1 100	46	4

MATERIAL	FINISH	PROJ.		PRJ.
NYLON	-		TOL.GEN. ± IS:2102 TOL.AXIS. ± (MED)	109

DRAWN	CHECKED	APPROVED	DIMNS	SCALE	TITLE
MALIKSAD			mm	NTS	NYLON SPACER 4mm
DATE 03.05.17	DATE	DATE			

KERALA STATE ELECTRONICS DEVELOPMENT CORPORATION LIMITED.

DRG. NUMBER: DPD 36 109 0 165

SIZE	ISSUE
A4	1
NO.OF SHEETS	1 / 1

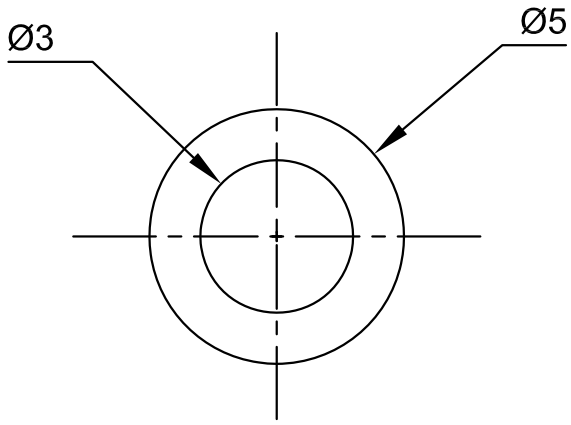

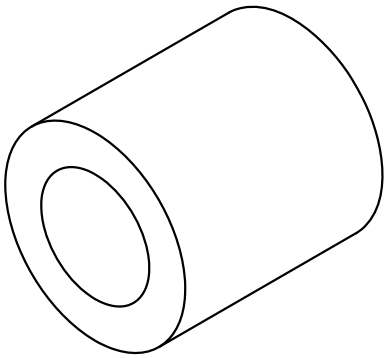

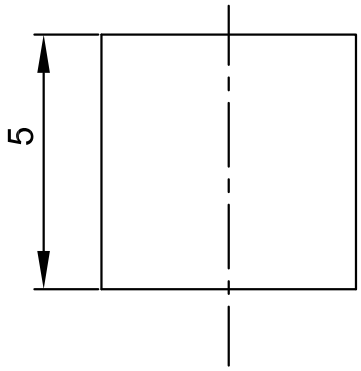

NOTE:
AVOID SHARP EDGES AND CORNERS

REV	CN.NO.	DATE	DESCRIPTION	CHECKED	APPROVED	NEXT ASSEMBLY	ITEM	QTY
4								
3								
2								
1								
0		03.05.17	ORIGINAL			DSA 36 109 0 107	12	4

MATERIAL	FINISH	PROJ.		PRJ.
NYLON	-		TOL.GEN. ± IS:2102 TOL.AXIS. ± (MED)	109

DRAWN	CHECKED	APPROVED	DIMNS	SCALE	TITLE
MALIKSAD			mm	NTS	NYLON SPACER 5mm
DATE 03.05.17	DATE	DATE			

KERALA STATE ELECTRONICS DEVELOPMENT CORPORATION LIMITED.

DRG. NUMBER: DPD 36 109 0 168

SIZE	ISSUE
A4	1
NO.OF SHEETS	1 / 1

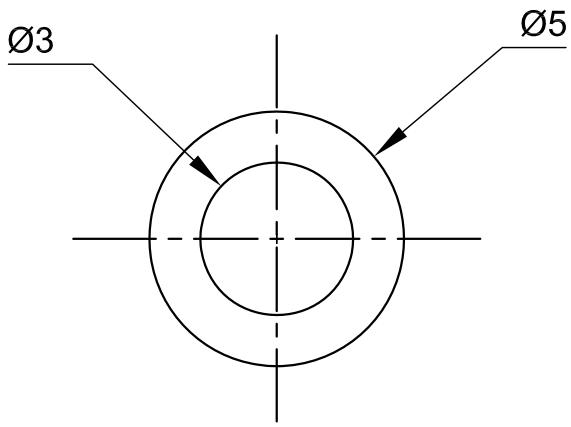

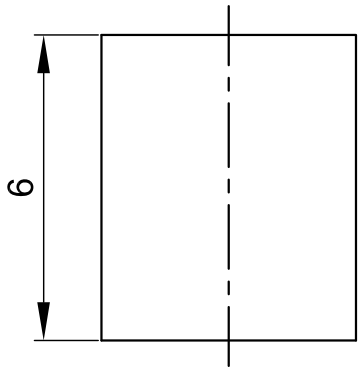

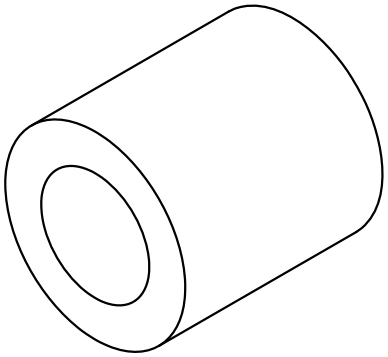

NOTE:
AVOID SHARP EDGES AND CORNERS

REV	CN.NO.	DATE	DESCRIPTION	CHECKED	APPROVED	NEXT ASSEMBLY	ITEM	QTY
4								
3								
2								
1								
0		03.05.17	ORIGINAL			DSA 36 109 0 103	26	4

MATERIAL: NYLON	FINISH: -	PROJ.	TOL.GEN. ± IS:2102 TOL.AXIS. ± (MED)	PRJ. 109	
DRAWN: MALIKSAD	CHECKED	APPROVED	DIMNS: mm	SCALE: NTS	TITLE: NYLON SPACER 6mm
DATE 03.05.17	DATE	DATE	DRG. NUMBER: DPD 36 109 0 183	SIZE: A4	ISSUE: 1
KERALA STATE ELECTRONICS DEVELOPMENT CORPORATION LIMITED.				NO.OF SHEETS: 1 / 1	

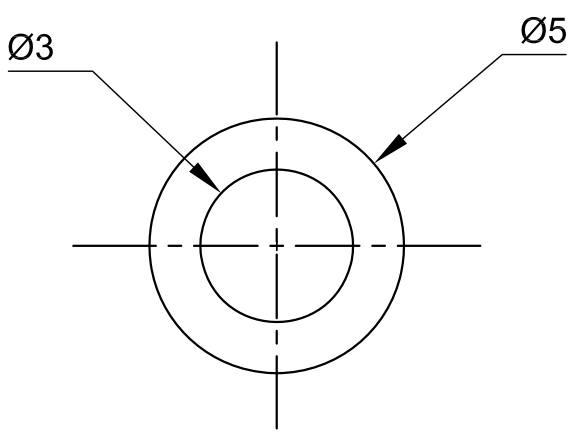

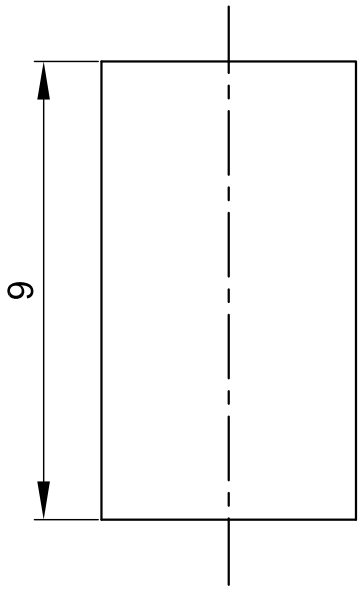

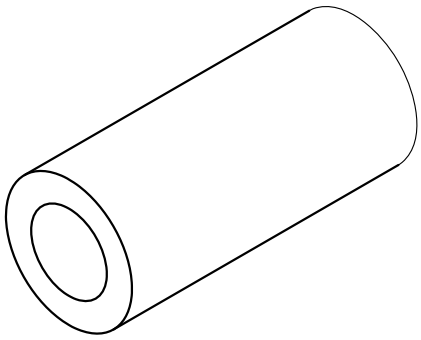

NOTE:
AVOID SHARP EDGES AND CORNERS

REV	CN.NO.	DATE	DESCRIPTION	CHECKED	APPROVED	NEXT ASSEMBLY	ITEM	QTY
4								
3								
2								
1								
0		03.05.17	ORIGINAL			DSA 36 109 0 103	28	4

MATERIAL	FINISH	PROJ.		PRJ.
NYLON	-		TOL.GEN. ± IS:2102 TOL.AXIS. ± (MED)	109

DRAWN	CHECKED	APPROVED	DIMNS	SCALE	TITLE
MALIKSAD			mm	NTS	NYLON SPACER 9mm
DATE 03.05.17	DATE	DATE			

KERALA STATE ELECTRONICS DEVELOPMENT CORPORATION LIMITED.

DRG. NUMBER: DPD 36 109 0 186

SIZE	ISSUE
A4	1
NO.OF SHEETS	1 / 1

RESTRICTED

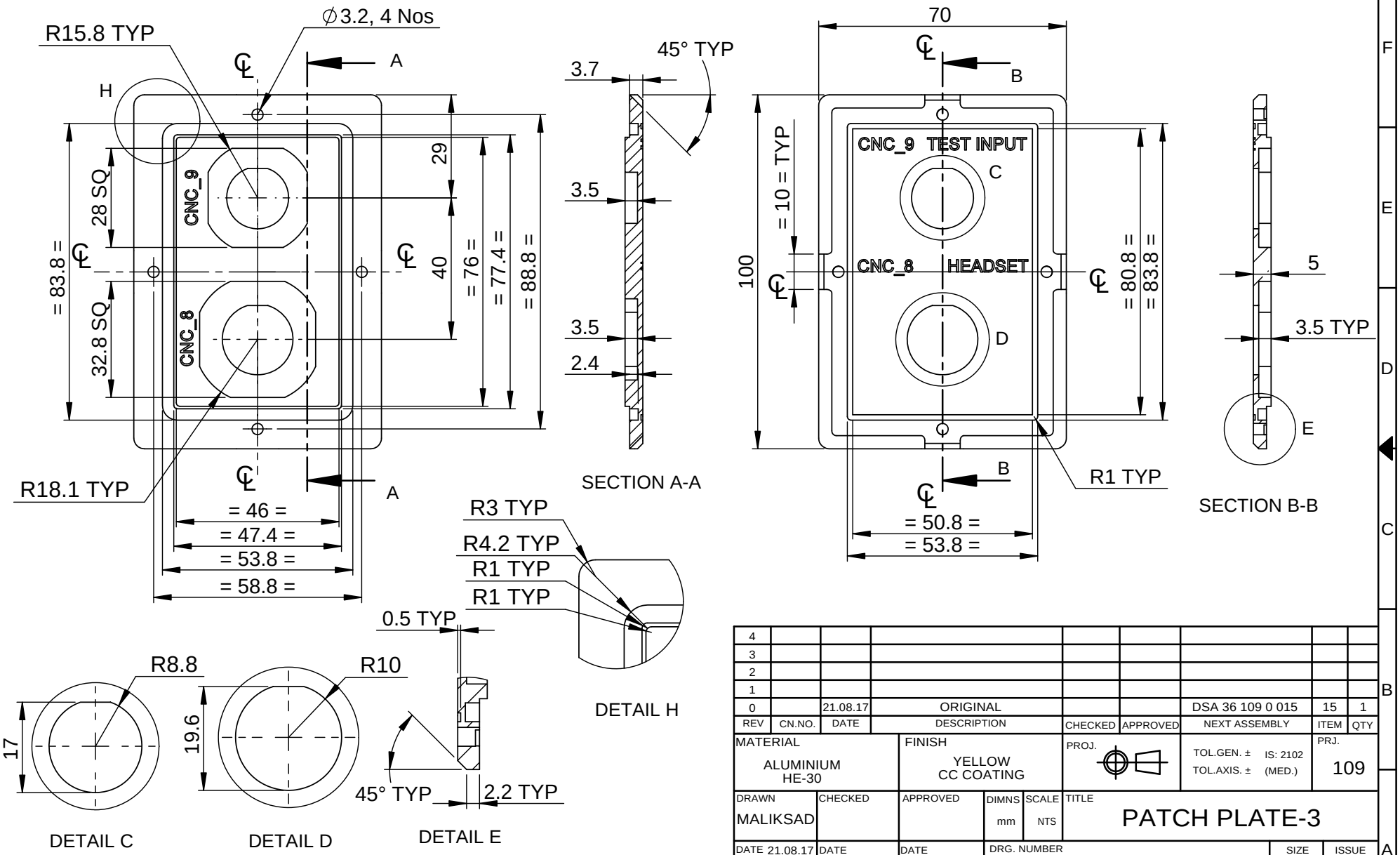

REV	CN.NO.	DATE	DESCRIPTION	CHECKED	APPROVED	NEXT ASSEMBLY	ITEM	QTY
4								
3								
2								
1								
0		21.08.17	ORIGINAL			DSA 36 109 0 015	15	1

MATERIAL: ALUMINIUM HE-30	FINISH: YELLOW CC COATING	PROJ.	TOL.GEN. ± IS: 2102 TOL.AXIS. ± (MED.)	PRJ. 109	
DRAWN: MALIKSAD	CHECKED	APPROVED	DIMNS: mm	SCALE: NTS	TITLE: PATCH PLATE-3
DATE: 21.08.17	DATE	DATE	DRG. NUMBER: DPD 36 109 0 063	SIZE: A4	ISSUE: 1
KERALA STATE ELECTRONICS DEVELOPMENT CORPORATION LIMITED				NO.OF SHEETS: 1 / 2	

RESTRICTED

RESTRICTED

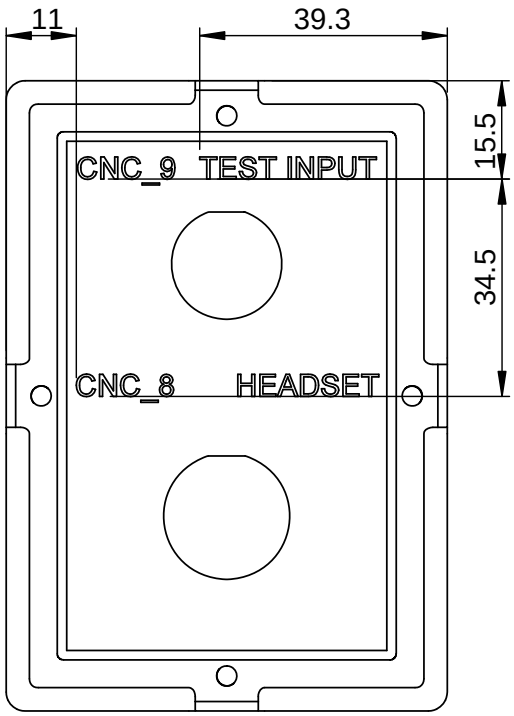

FRONT VIEW

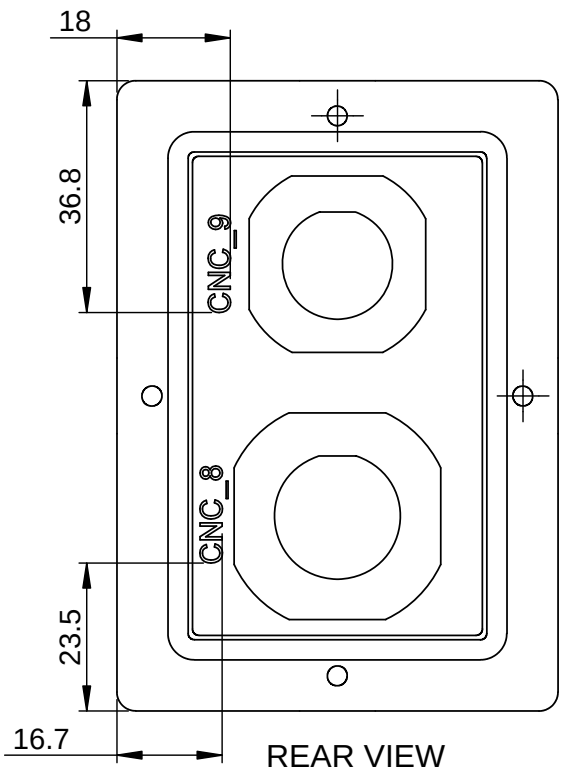

REAR VIEW

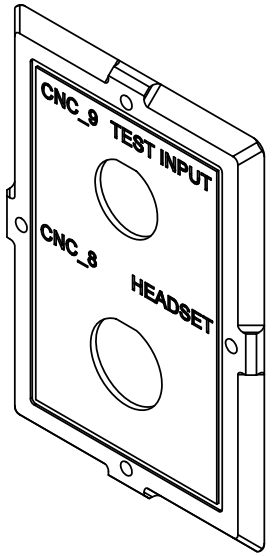

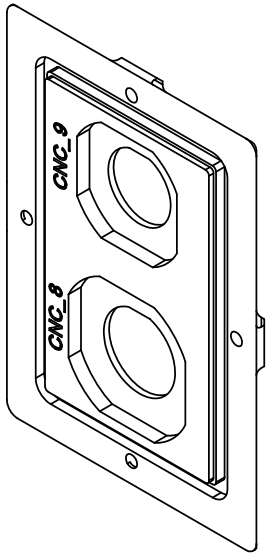

NOTE:

1. AVOID SHARP EDGES AND CORNERS
2. 3.5 mm HEIGHT TEXT TO BE ENGRAVED AND FILLED WITH BLACK PAINT

REV	CN.NO.	DATE	DESCRIPTION	CHECKED	APPROVED	NEXT ASSEMBLY	ITEM	QTY
4								
3								
2								
1								
0		28.08.17	ORIGINAL			DSA 36 109 0 015	15	1

MATERIAL	FINISH	PROJ.	TOL.GEN. ± IS: 2102 TOL.AXIS. ± (MED.)	PRJ.
ALUMINIUM HE-30	YELLOW CC COATING			109

DRAWN	CHECKED	APPROVED	DIMNS	SCALE	TITLE
MALIIKSAD			mm	NTS	PATCH PLATE-3
DATE 28.08.17	DATE	DATE	DRG. NUMBER		SIZE: A4 / ISSUE: 1
KERALA STATE ELECTRONICS DEVELOPMENT CORPORATION LIMITED			DPD 36 109 0 063		NO.OF SHEETS: 2 / 2

RESTRICTED

RESTRICTED

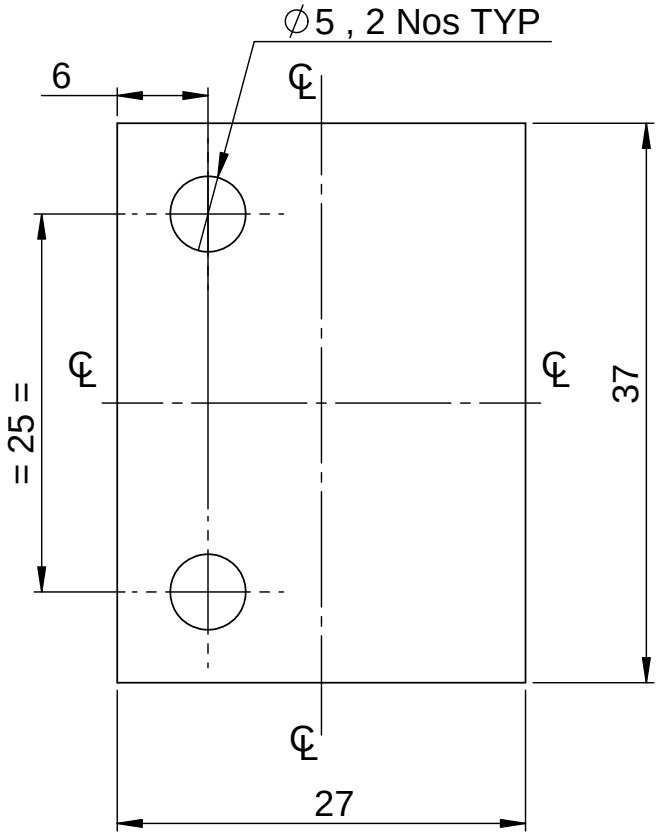

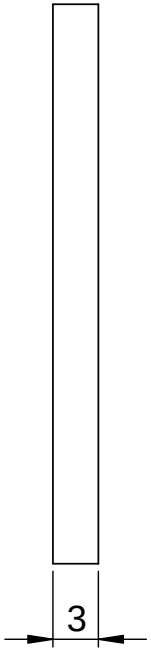

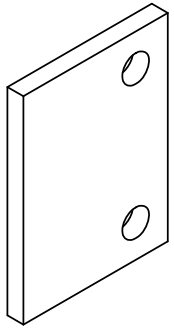

NOTE:

AVOID SHARP EDGES AND CORNERS

REV	CN.NO.	DATE	DESCRIPTION	CHECKED	APPROVED	NEXT ASSEMBLY	ITEM	QTY
4								
3								
2								
1								
0		29.09.17	ORIGINAL			DSA 36 109 0 015	5	3

MATERIAL	FINISH	PROJ.		PRJ.
ALUMINIUM H32-5052	YELLOW CC COATING		TOL.GEN. ± IS: 2102 TOL.AXIS. ± (MED.)	109

DRAWN	CHECKED	APPROVED	DIMNS	SCALE	TITLE
MALIKSAD			mm	NTS	PATCH PLATE FOR LATCH
DATE 29.09.17	DATE	DATE	DRG. NUMBER		SIZE: A4 · ISSUE: 1

KERALA STATE ELECTRONICS DEVELOPMENT CORPORATION LIMITED

DPD 36 109 0 058

NO.OF SHEETS: 1 / 1

RESTRICTED

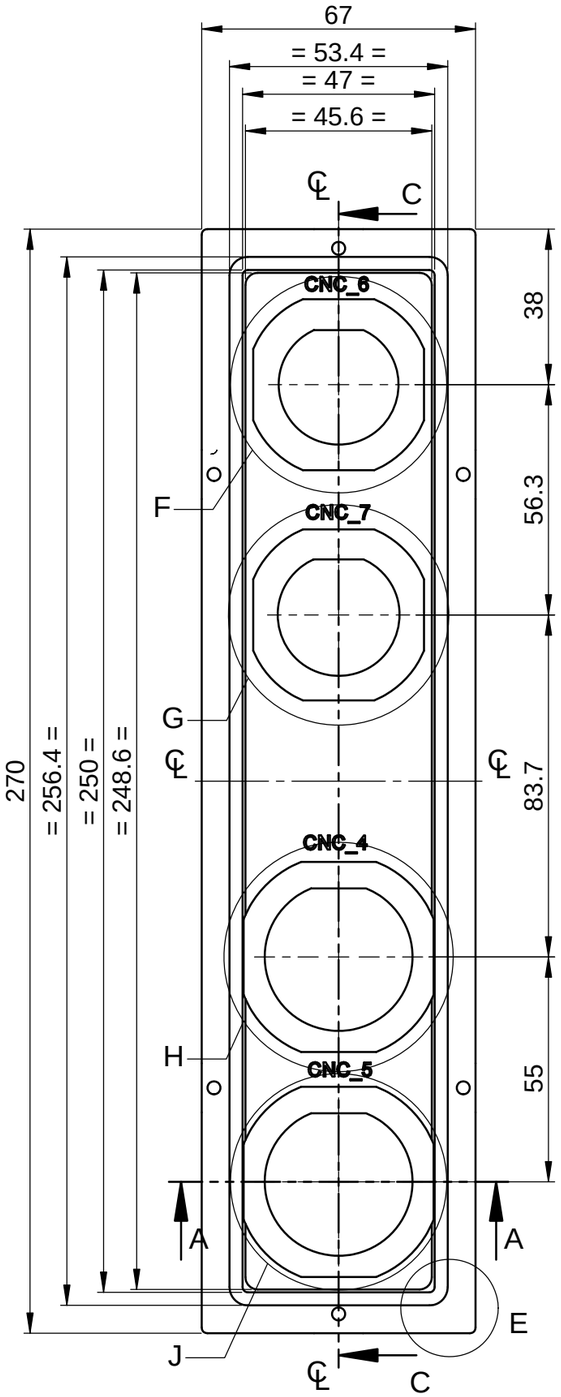

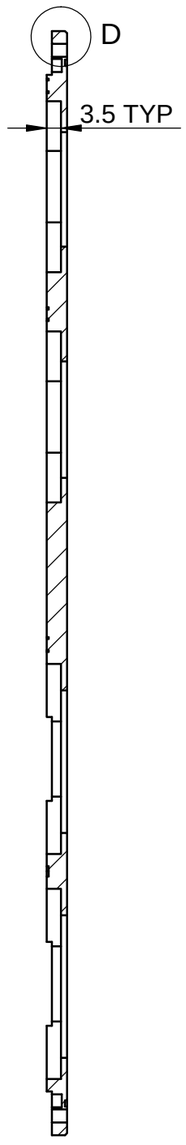

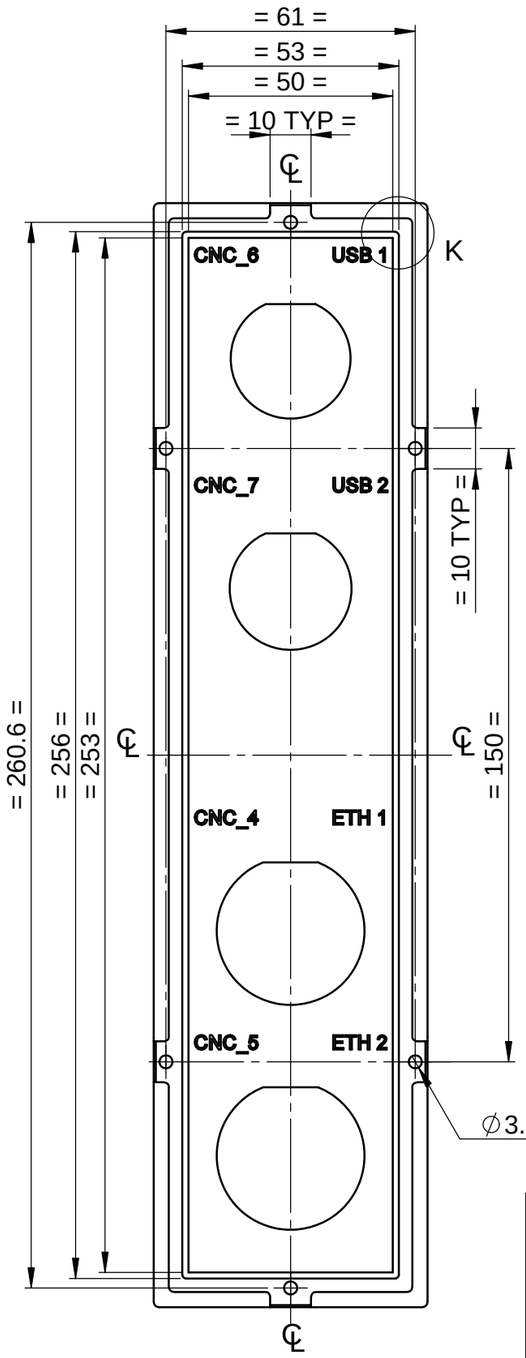

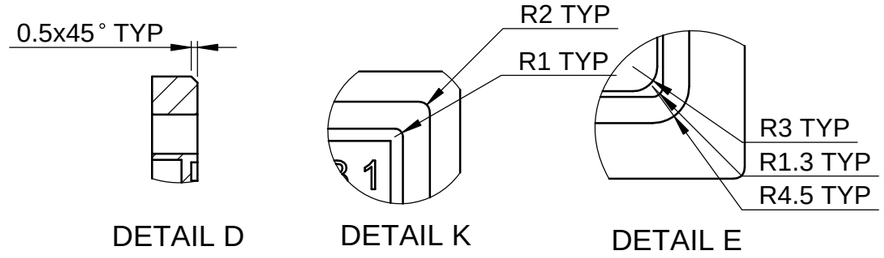

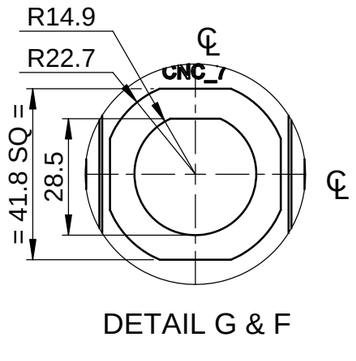

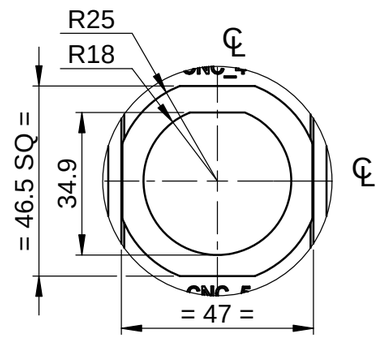

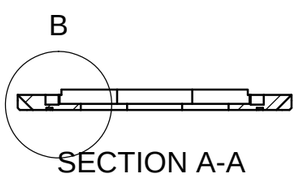

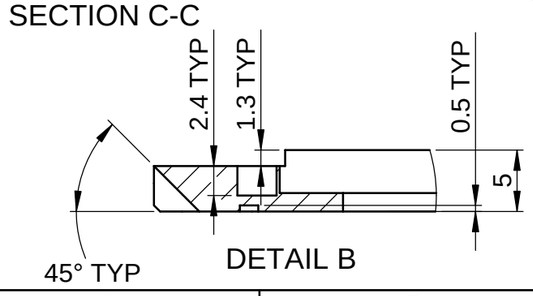

REV	CN.NO.	DATE	DESCRIPTION	CHECKED	APPROVED	NEXT ASSEMBLY	ITEM	QTY
4								
3								
2								
1								
0		21.08.17	ORIGINAL			DSA 36 109 0 019	15	1

MATERIAL	FINISH	PROJ.		PRJ.
ALUMINIUM HE-30	YELLOW CC COATING		TOL.GEN. ± IS:2102 TOL.AXIS. ± (MED)	109

DRAWN	CHECKED	APPROVED	DIMNS	SCALE	TITLE
MALIKSAD			mm	NTS	PATCH PLATE-1
DATE 21.08.17	DATE	DATE			

KERALA STATE ELECTRONICS DEVELOPMENT CORPORATION LIMITED

DRG. NUMBER: DPD 36 109 0 044

SIZE	ISSUE
A3	1
NO.OF SHEETS	1 / 2

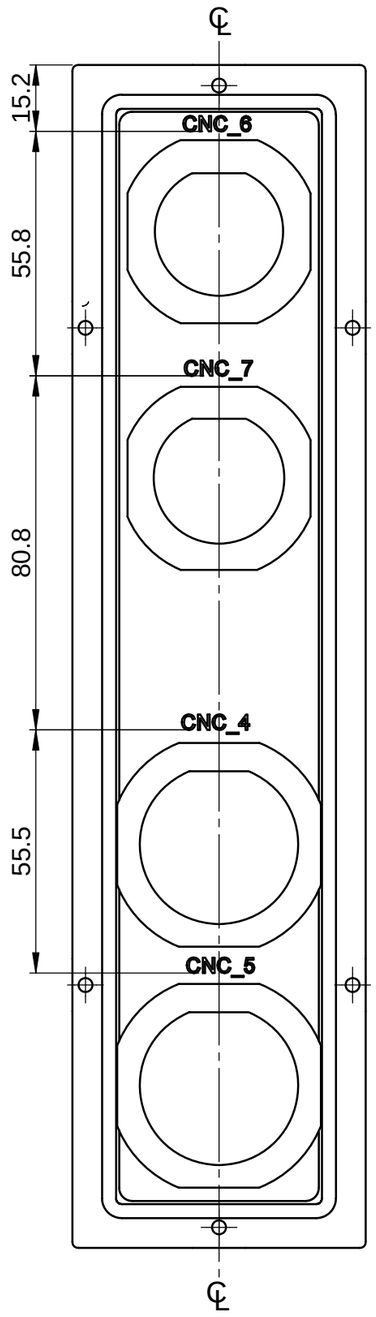

REAR VIEW

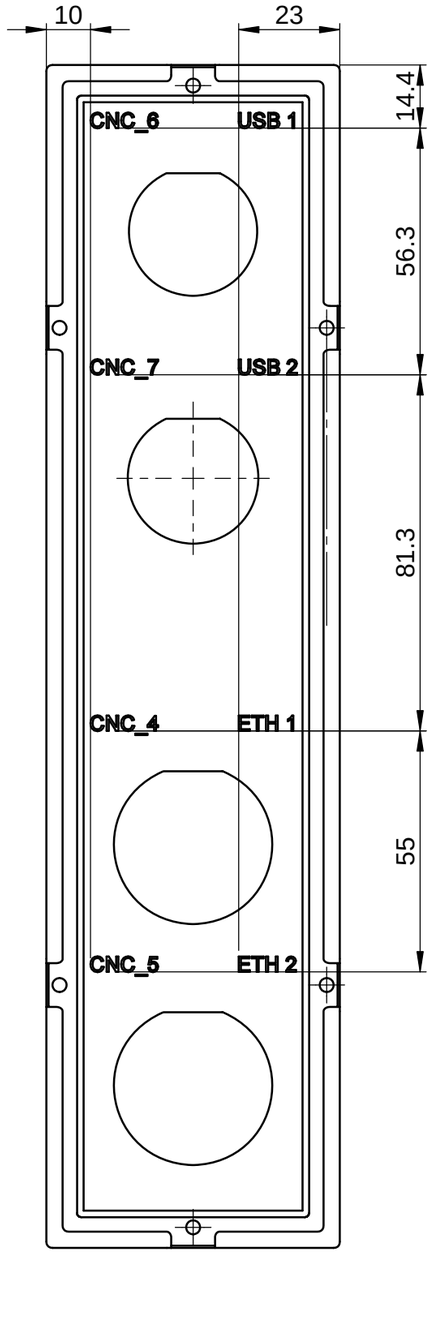

FRONT VIEW

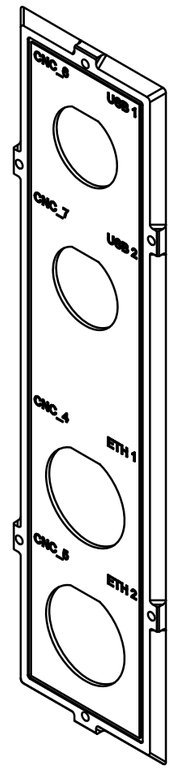

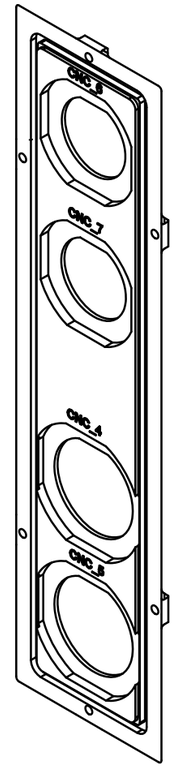

NOTE

1. AVOID SHARP CORNERS AND EDGES
2. 3.5mm HEIGHT TEXT TO BE ENGRAVED AND FILLED WITH BLACK PAINT
3. ON REAR SIDE ENGRAVING TEXT TO BE CENTRALISED TO THE CUTOUT

REV	CN.NO.	DATE	DESCRIPTION	CHECKED	APPROVED	NEXT ASSEMBLY	ITEM	QTY
4								
3								
2								
1								
0		19.08.17	ORIGINAL			DSA 36 109 0 019	15	1

MATERIAL: ALUMINIUM HE-30	FINISH: YELLOW CC COATING	PROJ.	TOL.GEN. ± IS:2102 TOL.AXIS. ± (MED)	PRJ. 109	
DRAWN: MALIKSAD	CHECKED	APPROVED	DIMNS: mm / SCALE: NTS	TITLE: PATCH PLATE-1	
DATE 19.08.17	DATE	DATE	DRG. NUMBER: DPD 36 109 0 044	SIZE: A3	ISSUE: 1
KERALA STATE ELECTRONICS DEVELOPMENT CORPORATION LIMITED.				NO.OF SHEETS: 2 / 2	

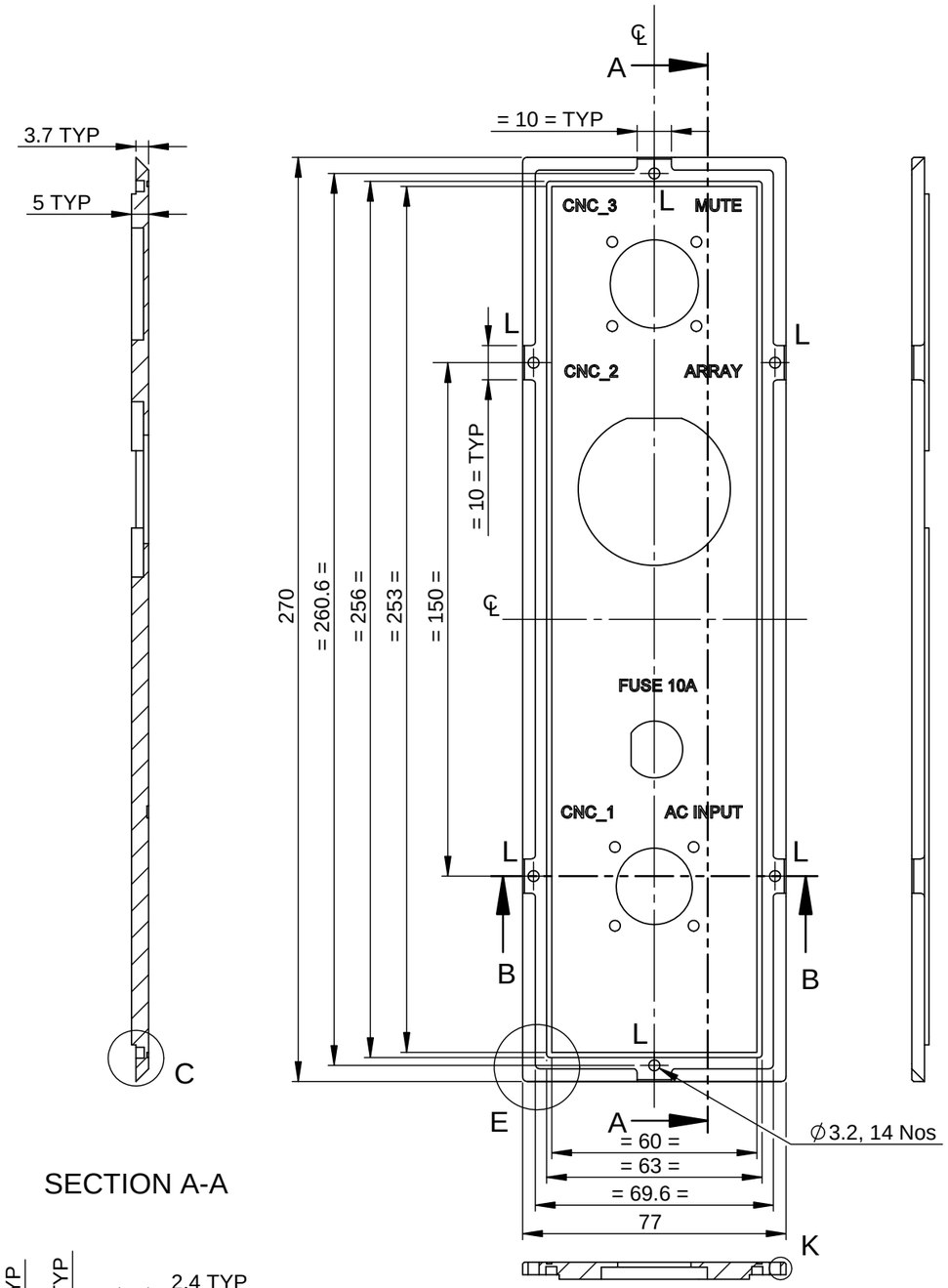

SECTION A-A

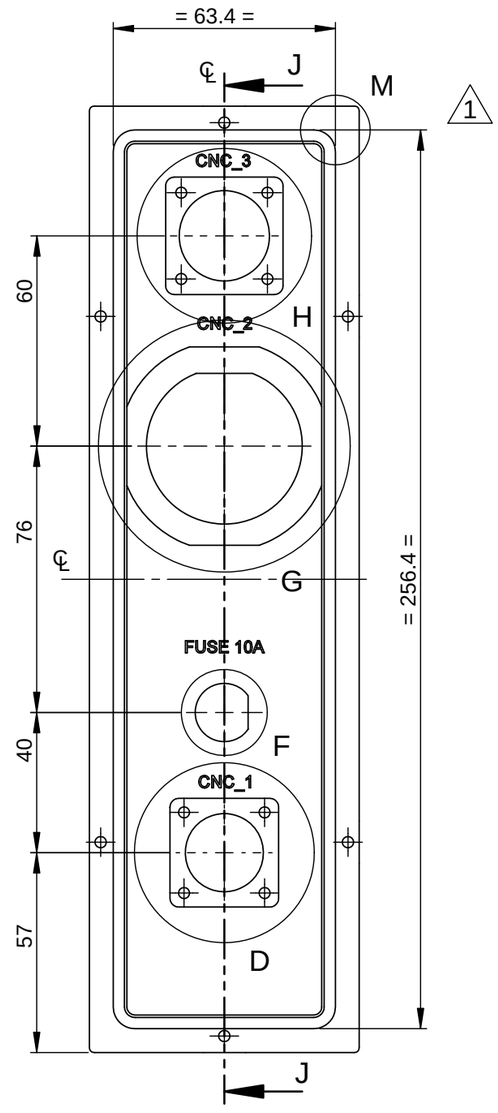

SECTION B-B

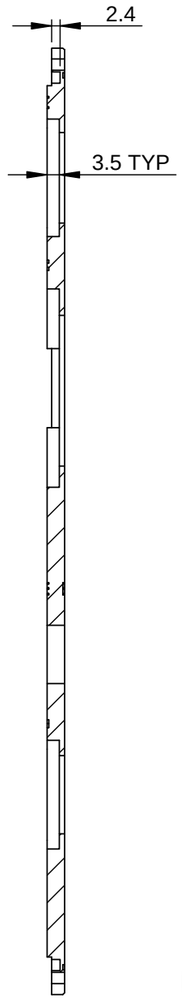

SECTION J-J

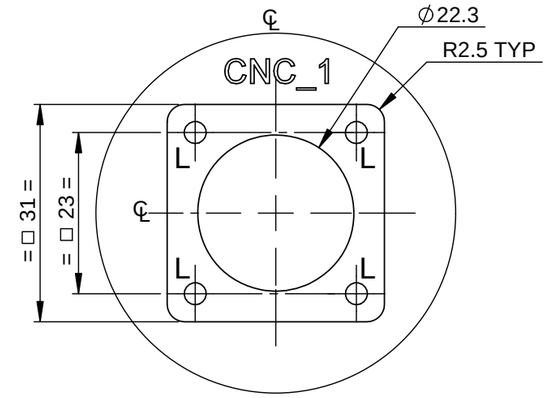

DETAIL D

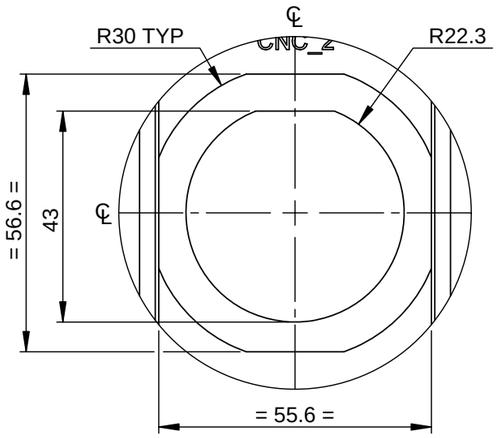

DETAIL G

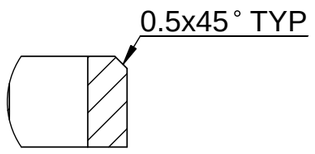

DETAIL K

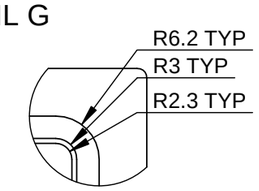

DETAIL M

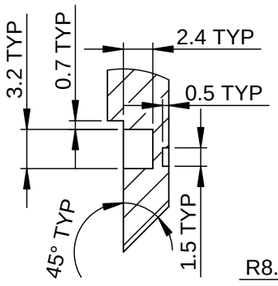

DETAIL C

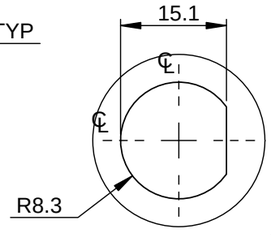

DETAIL F

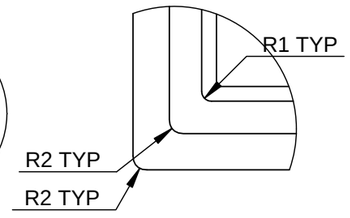

DETAIL E

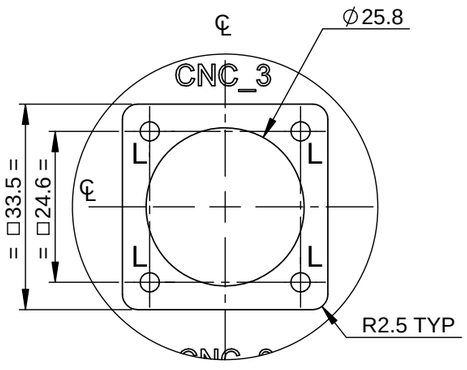

DETAIL H

REV	CN.NO.	DATE	DESCRIPTION	CHECKED	APPROVED	NEXT ASSEMBLY	ITEM	QTY
4								
3								
2								
1		22.08.19	REVISED					
0		15.11.16	ORIGINAL			DSA 36 109 0 019	04	01

MATERIAL: ALUMINIUM HE-30	FINISH: YELLOW CC COATING	PROJ.	TOL.GEN. ± IS:2102 TOL.AXIS. ± (MED)
PRJ. 109			

DRAWN	CHECKED	APPROVED	DIMNS	SCALE
MALIKSAD			mm	NTS
DATE 22.08.19	DATE	DATE		

TITLE: PATCH PLATE-2

KERALA STATE ELECTRONICS DEVELOPMENT CORPORATION LIMITED

DRG. NUMBER: DPD 36 109 0 042

SIZE	ISSUE
A3	1
NO.OF SHEETS	1 / 2

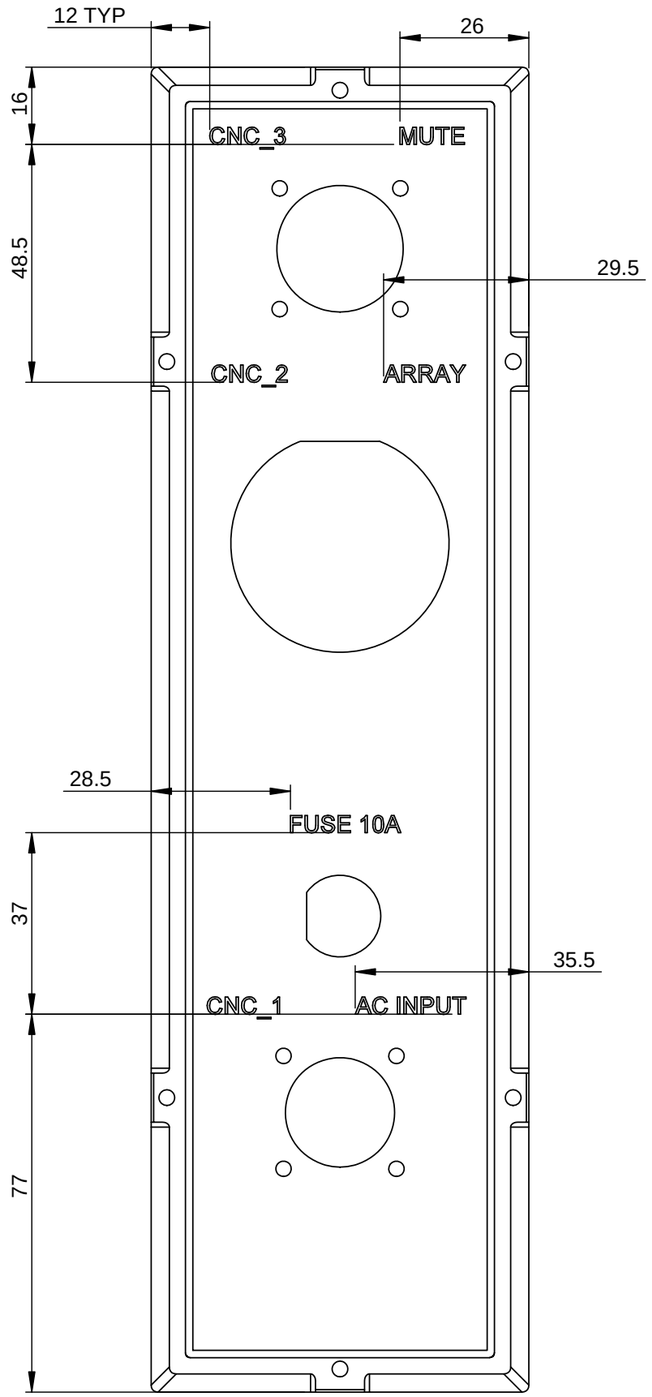

FRONT VIEW

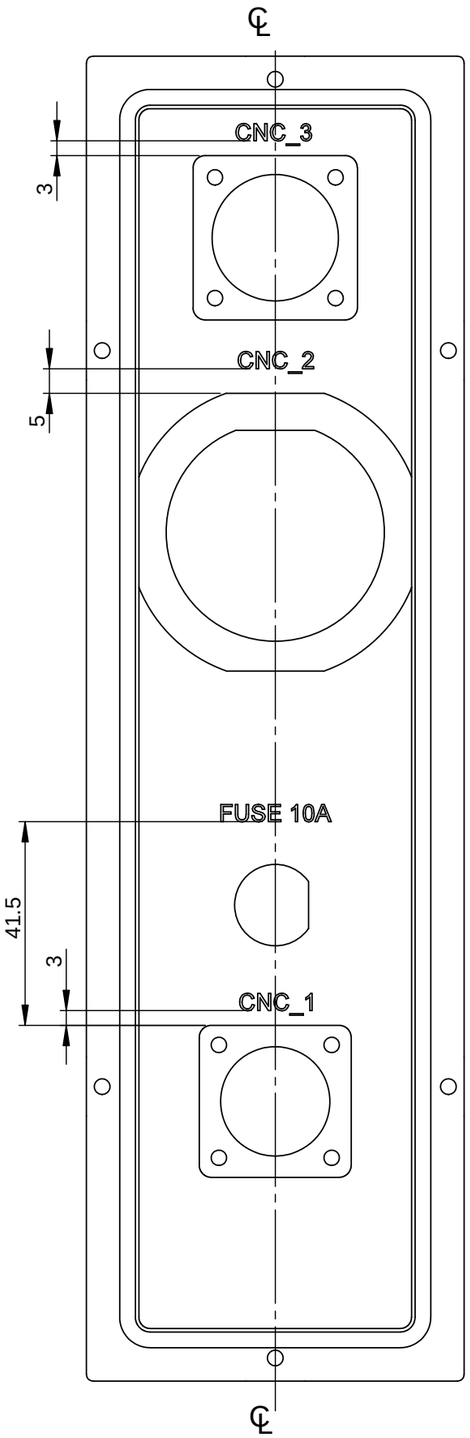

REAR VIEW

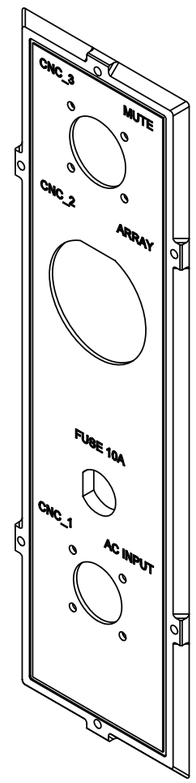

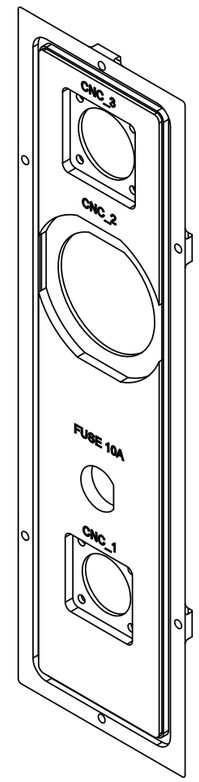

NOTE:

1. 3.5mm TEXT TO BE ENGRAVED AND FILLED WITH BLACK COLOUR
2. ON REAR SIDE ENGRAVING, TEXT TO BE CENTRALISED TO CUTOUT

REV	CN.NO.	DATE	DESCRIPTION	CHECKED	APPROVED	NEXT ASSEMBLY	ITEM	QTY
4								
3								
2								
1		22.08.19	REVISED					
0		15.11.16	ORIGINAL			DSA 36 109 0 019	04	01

MATERIAL: ALUMINIUM HE-30	FINISH: YELLOW CC COATING	PROJ.	TOL.GEN. ± IS:2102 TOL.AXIS. ± (MED)	PRJ. 109	
DRAWN: MALIKSAD	CHECKED	APPROVED	DIMNS: mm	SCALE: NTS	TITLE: PATCH PLATE-2
DATE: 22.08.19	DATE	DATE	DRG. NUMBER: DPD 36 109 0 042	SIZE: A3	ISSUE: 1
KERALA STATE ELECTRONICS DEVELOPMENT CORPORATION LIMITED.				NO.OF SHEETS: 2 / 2	

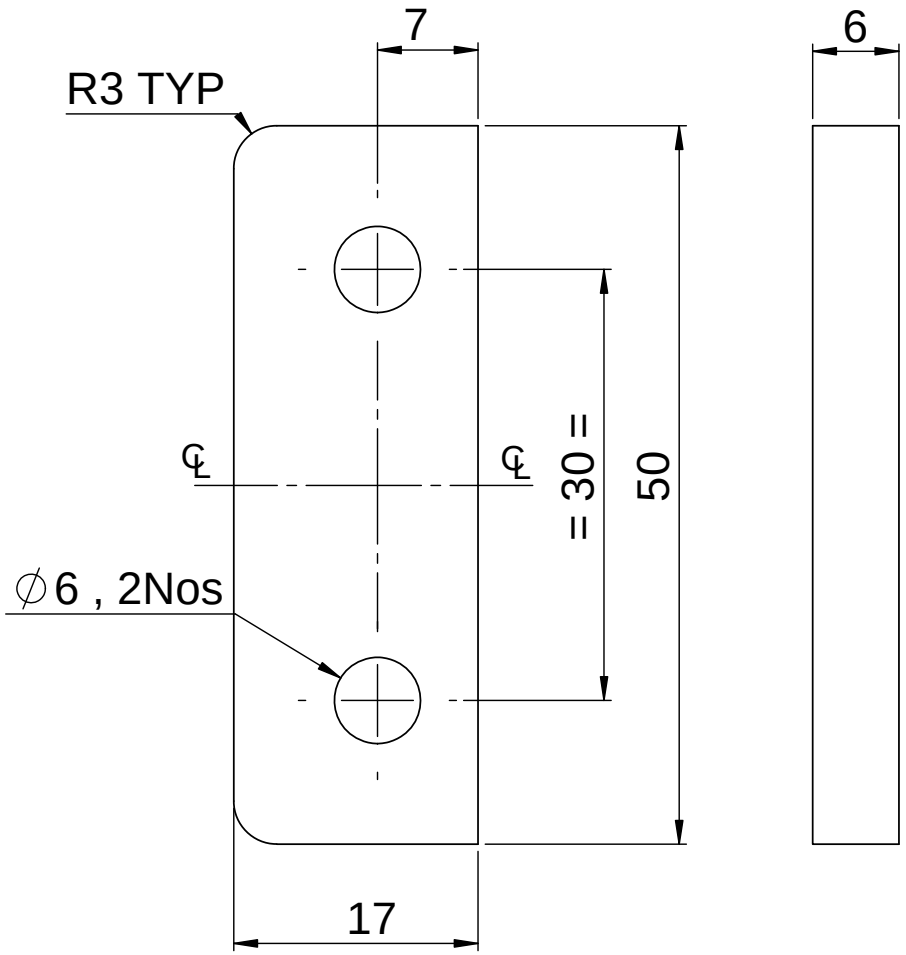

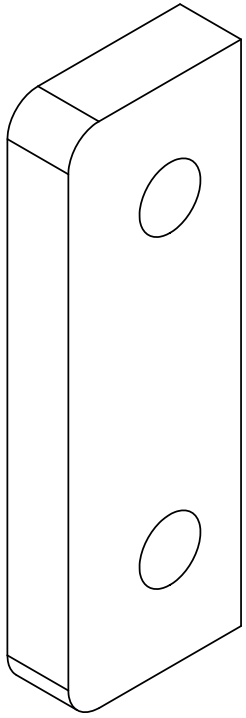

NOTE: AVOID SHARP CORNERS AND EDGES

REV	CN.NO.	DATE	DESCRIPTION	CHECKED	APPROVED	NEXT ASSEMBLY	ITEM	QTY
4								
3								
2								
1								
0		17.10.17	ORIGINAL			-	-	-

MATERIAL	FINISH	PROJ.	TOL.GEN. ± / TOL.AXIS. ±	PRJ.
ALUMINIUM HE30	YELLOW C.C COATING		IS: 2102 (MED.)	109

DRAWN	CHECKED	APPROVED	DIMNS	SCALE	TITLE
MANJULAL			mm	NTS	PATCH PLATE- HINGES
DATE 17.10.17	DATE	DATE	DRG. NUMBER		SIZE: A4 / ISSUE: 1
KERALA STATE ELECTRONICS DEVELOPMENT CORPORATION LIMITED			DPD 36 109 0 038		NO.OF SHEETS: 1 / 1

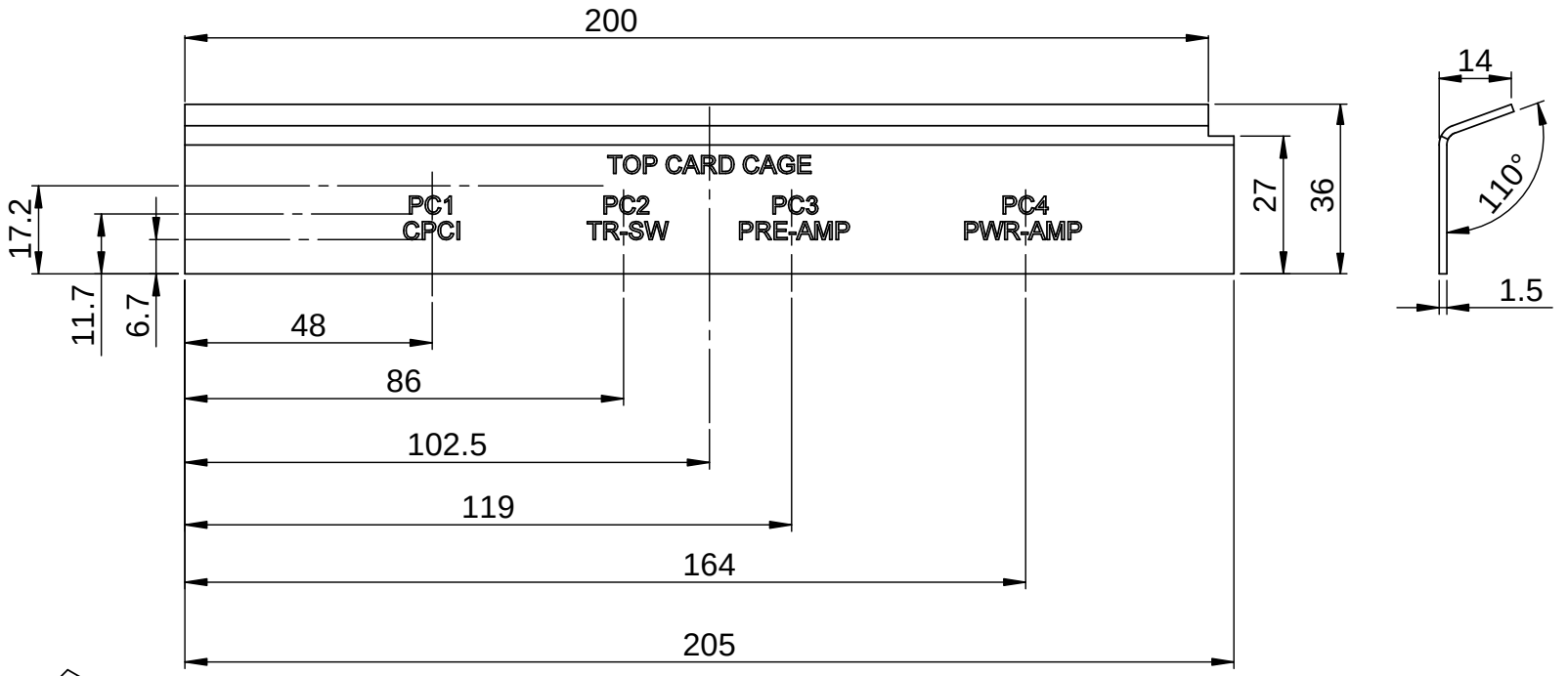

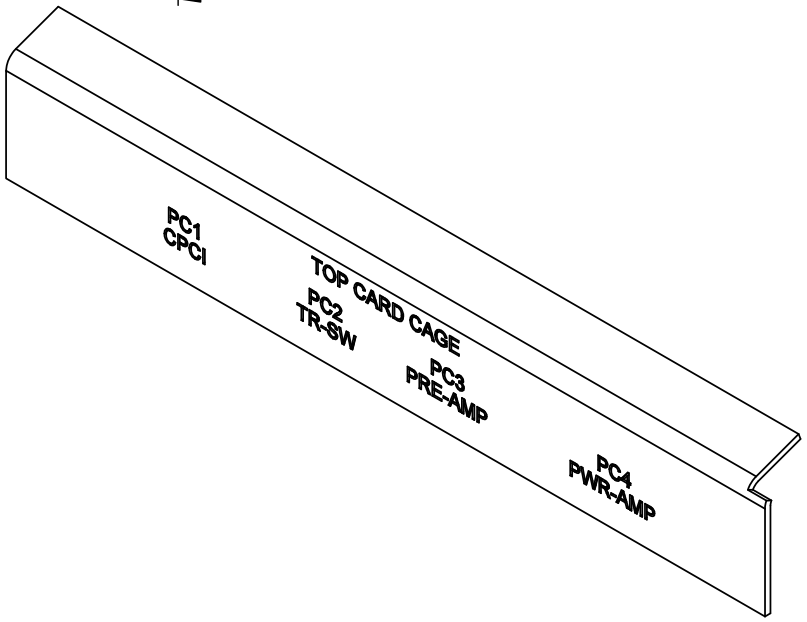

NOTE:

1. TEXT HEIGHT 3.5 TO BE ENGRAVED AFTER ANODISING AND CENTRALISED TO HORIZONTAL DIMENSION
2. AVOID SHARP CORNERS AND EDGES

REV	CN.NO.	DATE	DESCRIPTION	CHECKED	APPROVED	NEXT ASSEMBLY	ITEM	QTY
4								
3								
2								
1								
0		17.10.17	ORIGINAL			-	-	-

MATERIAL	FINISH	PROJ.		PRJ.
1.5mm ALUMINIUM PLATE	25 MICRON BLACK ANODISING		TOL.GEN. ± IS: 2102 TOL.AXIS. ± (MED.)	109

DRAWN	CHECKED	APPROVED	DIMNS	SCALE	TITLE
MANJULAL			mm	NTS	PCB SLOT NAME PLATE-2
DATE 17.10.17	DATE	DATE	DRG. NUMBER		SIZE / ISSUE
KERALA STATE ELECTRONICS DEVELOPMENT CORPORATION LIMITED			DPD 36 109 0 178		A4 / 1
					NO.OF SHEETS 1 / 1

RESTRICTED

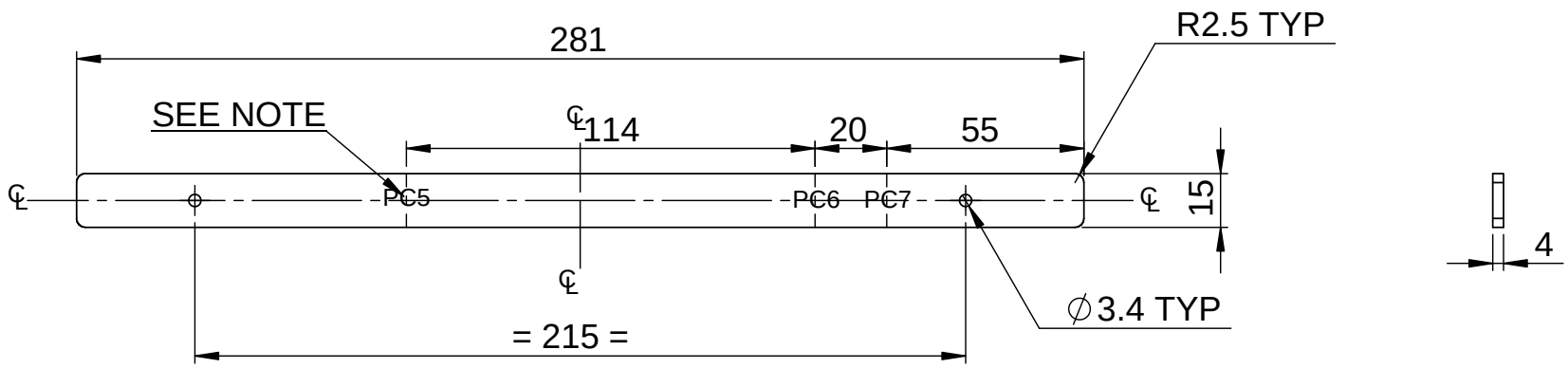

NOTE

AVOID SHARP EDGES AND CORNERS

5mm TEXT TO BE ENGRAVED AND CENTRALISED TO CORRESPONDING LINES

REV	CN.NO.	DATE	DESCRIPTION	CHECKED	APPROVED	NEXT ASSEMBLY	ITEM	QTY
4								
3								
2								
1								
0		09.11.16	ORIGINAL					

MATERIAL: 4mm ALUMINIUM SHEET	FINISH: 25 MICRON BLACK ANODISING	PROJ.	TOL.GEN. ± IS: 2102 TOL.AXIS. ± (MED.)	PRJ. 109	
DRAWN: MALIKSAD	CHECKED	APPROVED	DIMNS: mm / SCALE: NTS	TITLE: PCB SLOT NAME PLATE- 1	
DATE 09.11.16	DATE	DATE	DRG. NUMBER: DPD 36 109 0 071	SIZE: A4	ISSUE: 1
KERALA STATE ELECTRONICS DEVELOPMENT CORPORATION LIMITED				NO.OF SHEETS: 1 / 1	

RESTRICTED

RESTRICTED

RESTRICTED

DEVIATION FOR NON - TOLERANCED DIMENSIONS (IS : 2102 - MEDIUM)											
ABOVE	0.5	6	30	120	315	1000	LENGTH IN mm OF SHORTER SIDE OF ANGLE				
UP TO	6	30	120	315	1000	2000	ABOVE & UP TO	0.5 - 6	6 - 30	30 - 120	120 - 400
TOL.	±0.1	±0.2	±0.3	±0.5	±0.8	±1.2	TOL.	± 1°	± 30'	± 20'	± 10'

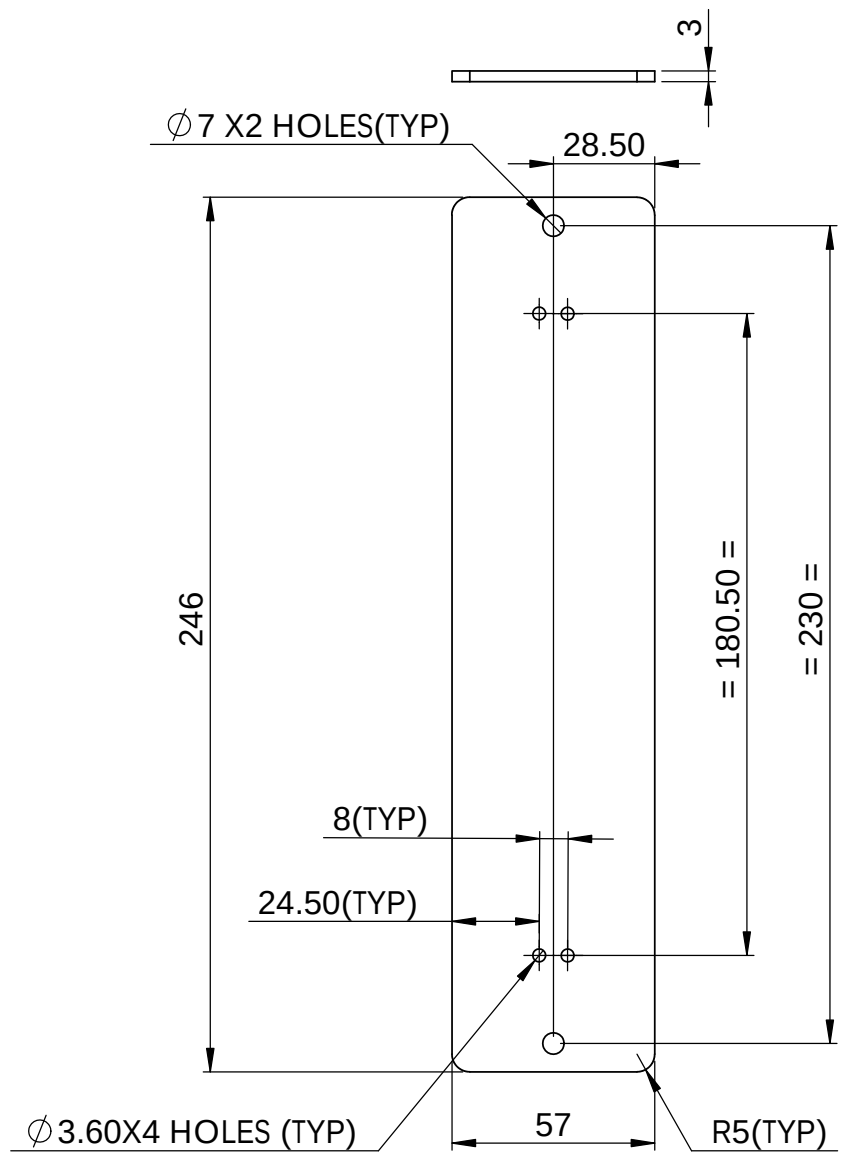

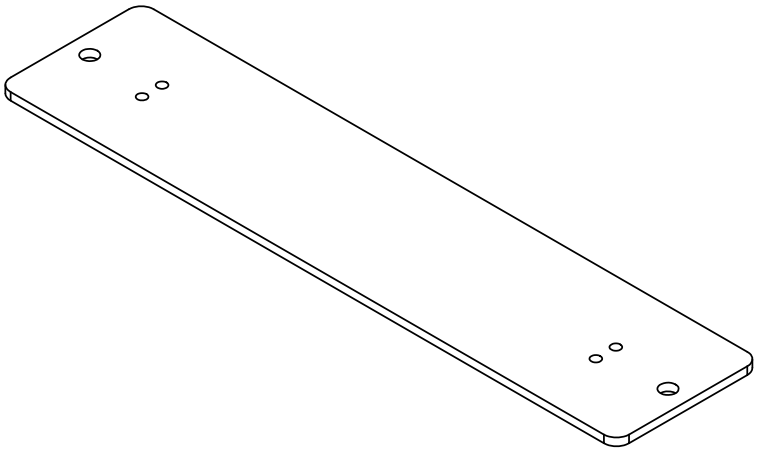

REV	CN.NO.	DATE	DESCRIPTION	CHECKED	APPROVED	NEXT ASSEMBLY	ITEM	QTY
4								
3								
2								
1								
0		19.05.16	ORIGINAL			DSA 36 094 0 026	13	1

MATERIAL	FINISH	PROJ.		PRJ.
ALUMINUIM	BLACK ANODIZING		TOL.GEN. ± IS: 2102 TOL.AXIS. ± (MED.)	094

DRAWN	CHECKED		DIMNS	SCALE	TITLE
MALIKSAD			mm	NTS	PIRI CONNECTOR SUPPORTING PLATE
DATE 19.05.16	MECHANICAL	ELECTRICAL	DRG. NUMBER		SIZE / ISSUE
KERALA STATE ELECTRONICS DEVELOPMENT CORPORATION LIMITED			DPD 36 094 0 602		A4 / 1
					NO.OF SHEETS 1 / 1

RESTRICTED

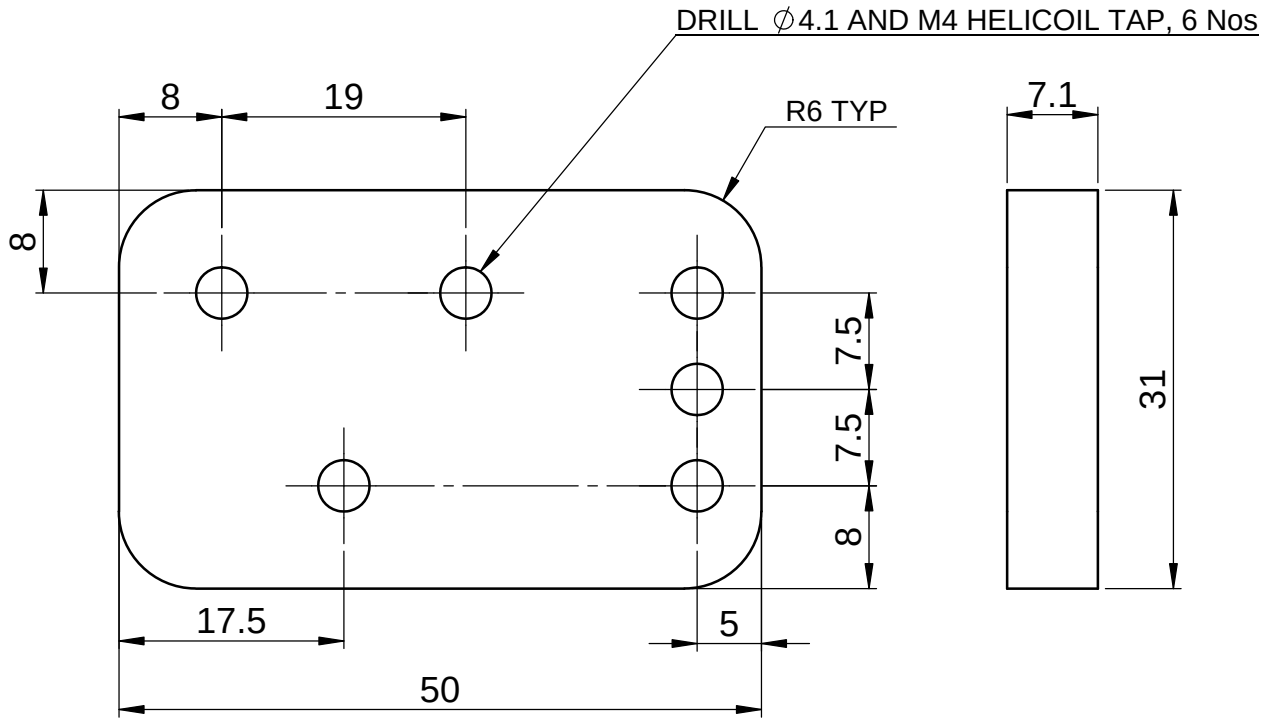

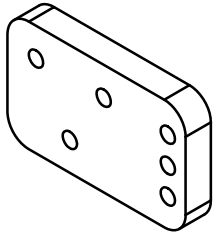

NOTE

1. AVOID SHARP CORNERS AND EDGES
2. BURRS MUST BE REMOVED

REV	CN.NO.	DATE	DESCRIPTION	CHECKED	APPROVED	NEXT ASSEMBLY	ITEM	QTY
4								
3								
2								
1								
0		19.08.17	ORIGINAL			DSA 36 109 0 020	9	7

MATERIAL: ALUMINIUM HE-30	FINISH: YELLOW CC COATING	PROJ.	TOL.GEN. ± IS: 2102 TOL.AXIS. ± (MED.)	PRJ. 109	
DRAWN: MALIKSAD	CHECKED	APPROVED	DIMNS: mm / SCALE: NTS	TITLE: PLATE CONNECTING PART 1	
DATE 19.08.17	DATE	DATE	DRG. NUMBER: DPD 36 109 0 095	SIZE: A4	ISSUE: 1
KERALA STATE ELECTRONICS DEVELOPMENT CORPORATION LIMITED				NO.OF SHEETS: 1 / 1	

RESTRICTED

RESTRICTED

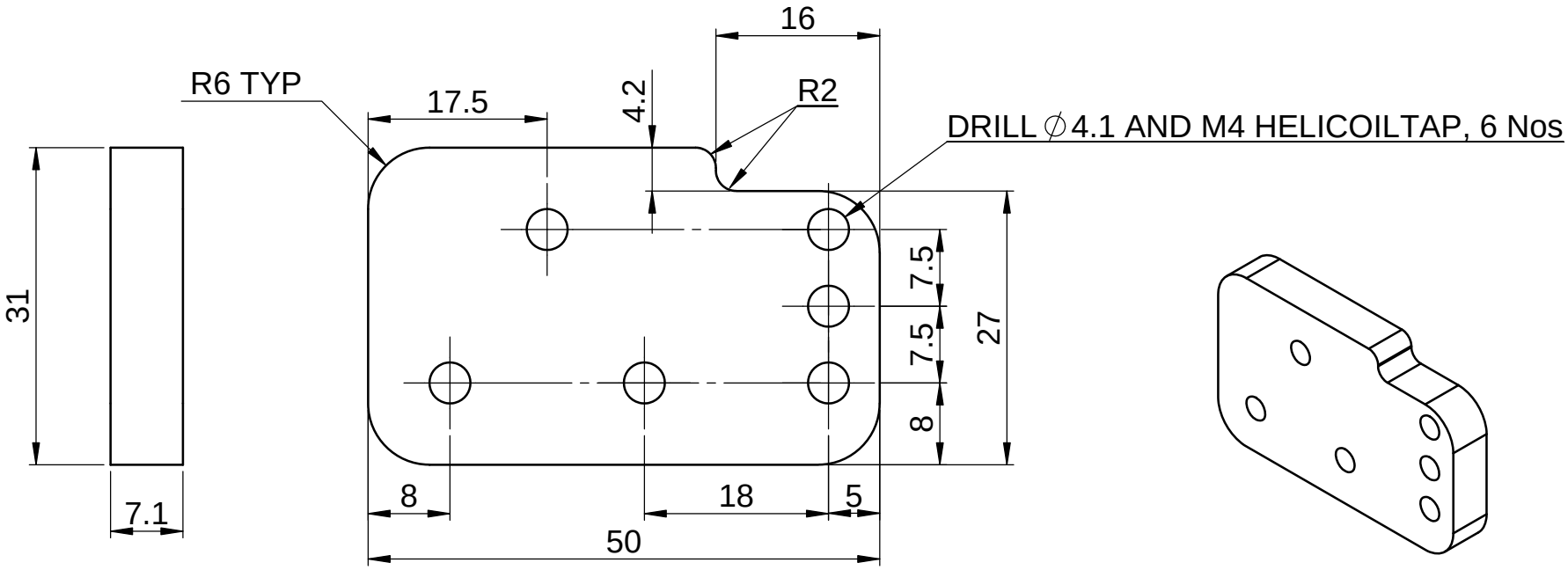

NOTE

1. AVOID SHARP CORNERS AND EDGES
2. BURRS MUST BE REMOVED

REV	CN.NO.	DATE	DESCRIPTION	CHECKED	APPROVED	NEXT ASSEMBLY	ITEM	QTY
4								
3								
2								
1								
0		18.09.17	ORIGINAL			DSA 36 109 0 020	17	1

MATERIAL	FINISH	PROJ.		PRJ.
ALUMINIUM HE-30	YELLOW CC COATING		TOL.GEN. ± IS: 2102 TOL.AXIS. ± (MED.)	109

DRAWN	CHECKED	APPROVED	DIMNS	SCALE	TITLE
MALIKSAD			mm	NTS	PLATE CONNECTING PART 2
DATE 18.09.17	DATE	DATE	DRG. NUMBER		SIZE: A4 / ISSUE: 1
KERALA STATE ELECTRONICS DEVELOPMENT CORPORATION LIMITED			DPD 36 109 0 103		NO.OF SHEETS: 1 / 1

RESTRICTED

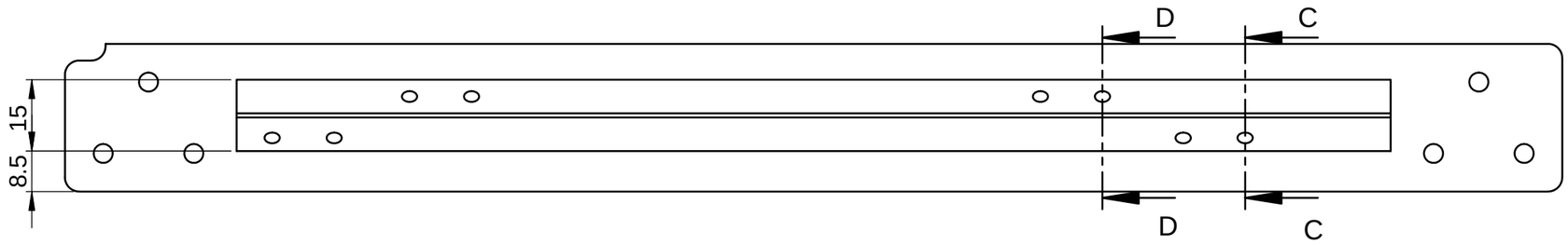

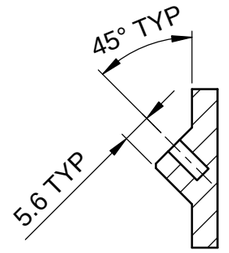

SECTION D-D

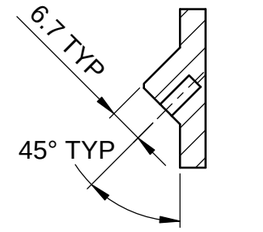

SECTION C-C

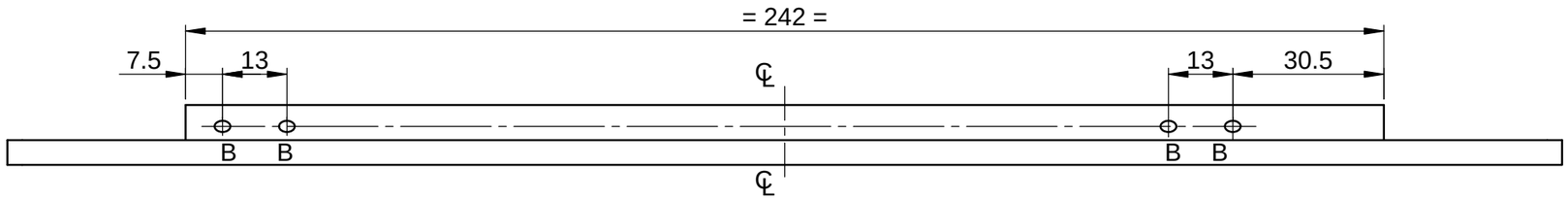

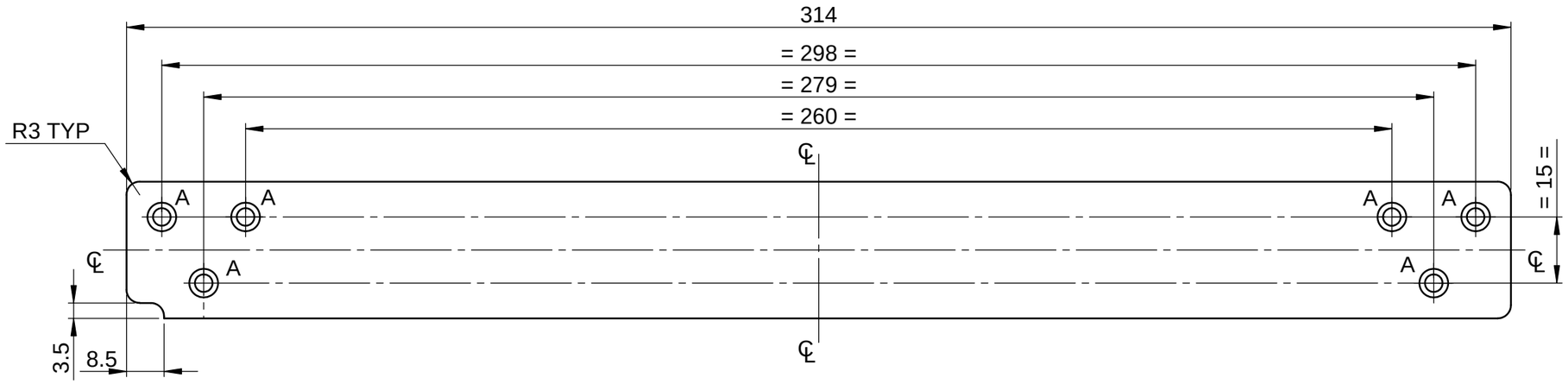

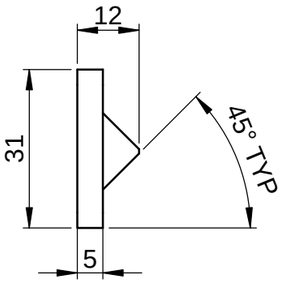

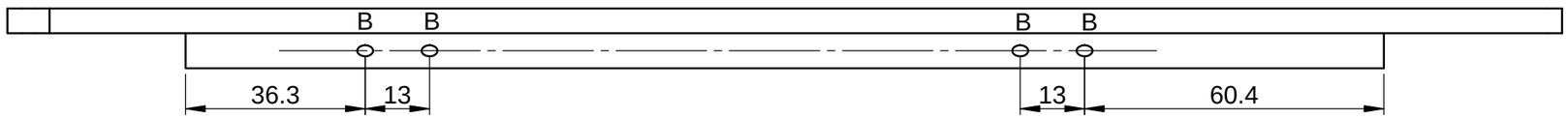

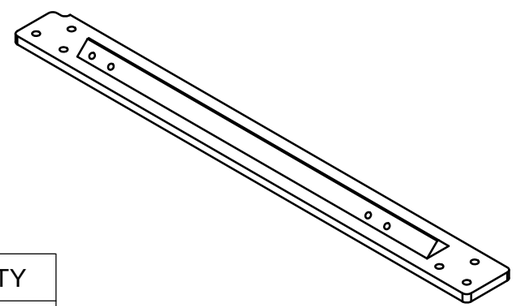

NOTE

1. AVOID SHARP CORNERS AND EDGES
2. ALL BURRS MUST BE REMOVED

SL NO	REF	DESCRIPTION	QTY
1	A	⌀4.2 ⌵ ⌀8.4	6
2	B	DRILL ⌀3.1, ↧ 6 AND M3 HELICOIL TAP	8

REV	CN.NO.	DATE	DESCRIPTION	CHECKED	APPROVED	NEXT ASSEMBLY	ITEM	QTY
4								
3								
2								
1								
0		19.08.17	ORIGINAL			DSA 36 109 0 020	15	1

MATERIAL	FINISH	PROJ.		PRJ.
ALUMINIUM HE-30	YELLOW CC COATING		TOL.GEN. ± IS:2102 TOL.AXIS. ± (MED)	109

DRAWN	CHECKED	APPROVED	DIMNS	SCALE	TITLE
MALIKSAD			mm	NTS	PLATE-01
DATE 19.08.17	DATE	DATE			

KERALA STATE ELECTRONICS DEVELOPMENT CORPORATION LIMITED

DRG. NUMBER: DPD 36 109 0 101

SIZE	ISSUE
A3	1
NO.OF SHEETS	1 / 1

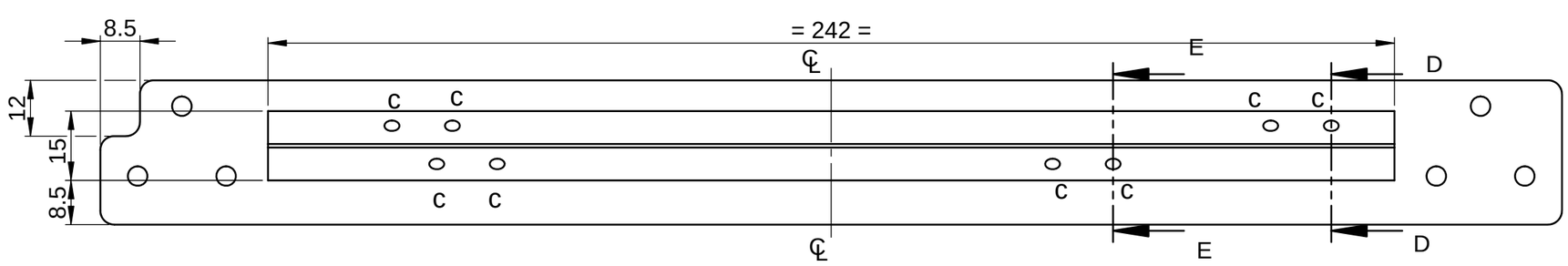

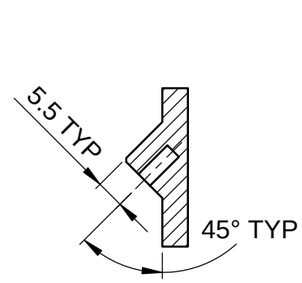

SECTION E-E

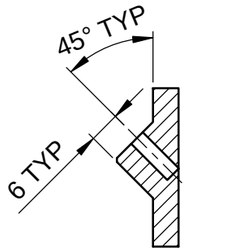

SECTION D-D

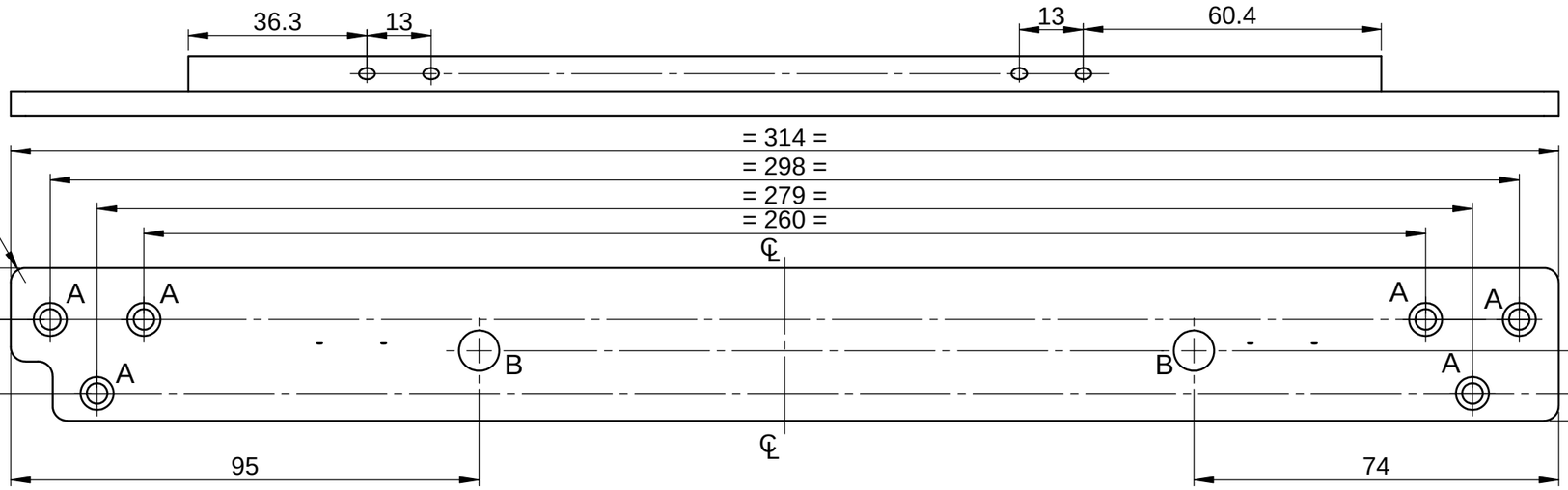

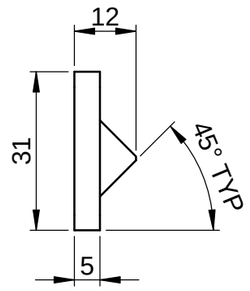

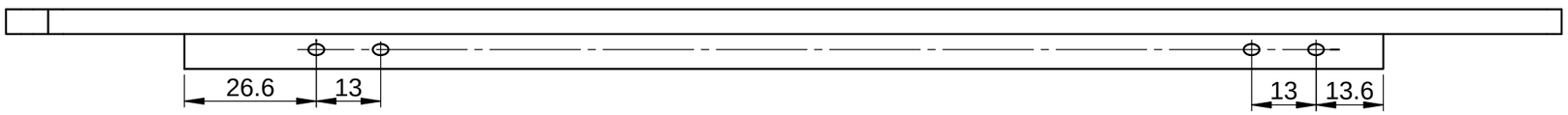

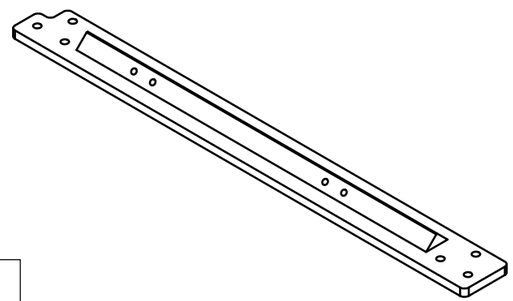

NOTE

1. AVOID SHARP CORNERS AND EDGES
2. ALL BURRS MUST BE REMOVED

SL NO	REF	DESCRIPTION	QTY
1	A	∅4.2 ⌵ ∅8.4	6
2	B	DRILL ∅8.2, ↧7 AND M8 HELICOIL TAP	2
3	C	DRILL ∅3.1, ↧6 AND M3 HELICOIL TAP	8

REV	CN.NO.	DATE	DESCRIPTION	CHECKED	APPROVED	NEXT ASSEMBLY	ITEM	QTY
4								
3								
2								
1								
0		19.08.17	ORIGINAL			DSA 36 109 0 020	18	1

MATERIAL: ALUMINIUM HE -30	FINISH: YELLOW CC COATING	PROJ.	TOL.GEN. ± IS:2102 TOL.AXIS. ± (MED)	PRJ. 109	
DRAWN: MALIKSAD	CHECKED	APPROVED	DIMNS: mm	SCALE: NTS	TITLE: PLATE-02
DATE 19.08.17	DATE	DATE			

KERALA STATE ELECTRONICS DEVELOPMENT CORPORATION LIMITED

DRG. NUMBER: DPD 36 109 0 104

SIZE	ISSUE
A3	1
NO.OF SHEETS	1 / 1

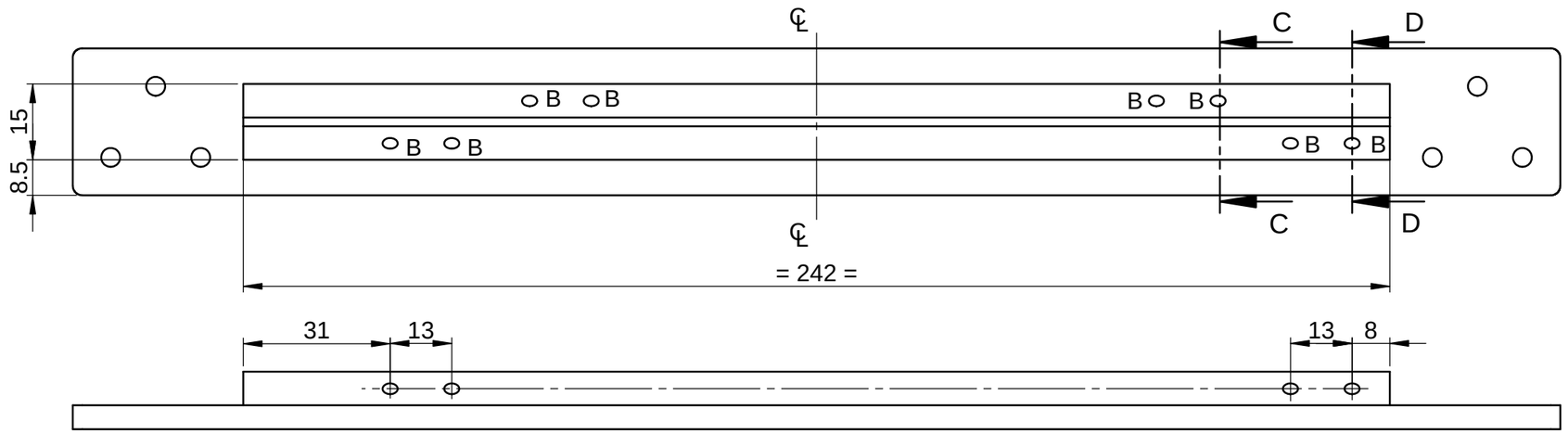

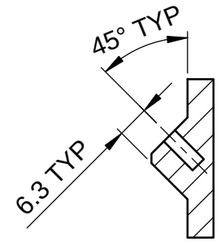

SECTION C-C

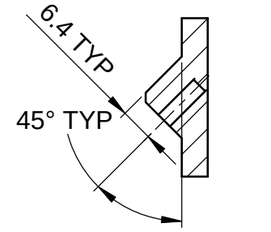

SECTION D-D

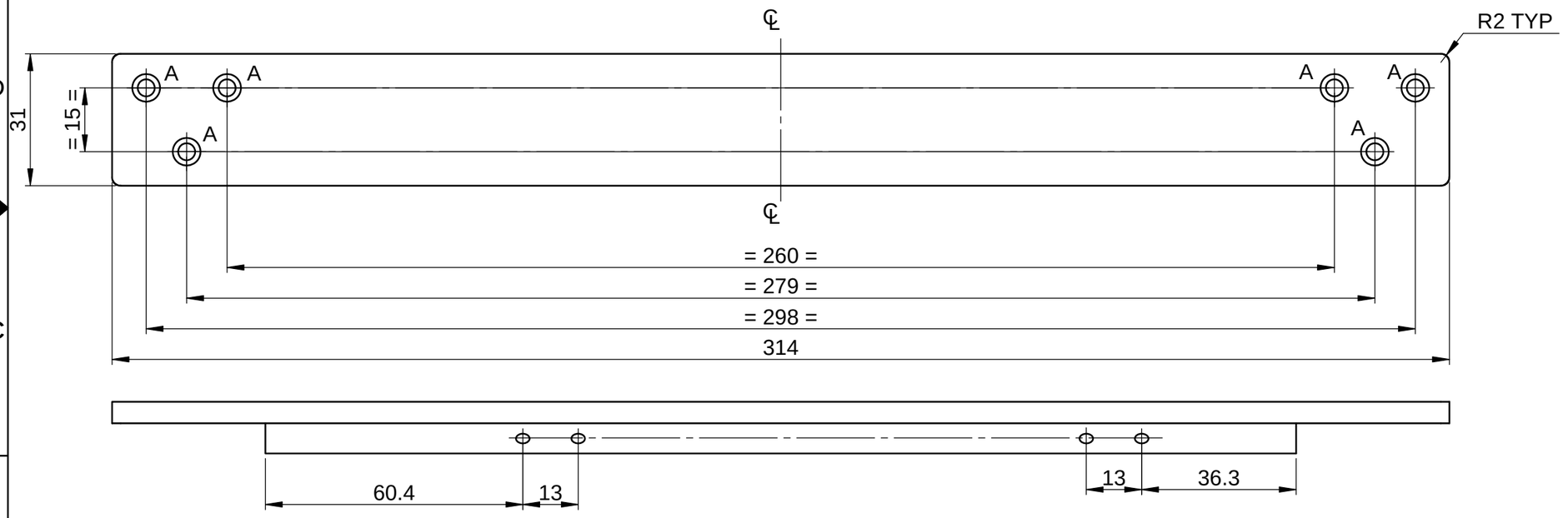

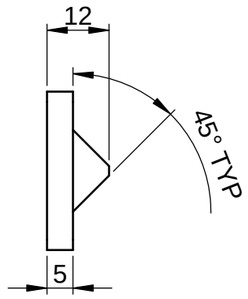

NOTE

1. AVOID SHARP CORNERS AND EDGES
2. ALL BURRS MUST BE REMOVED

SL NO	REF	DESCRIPTION	QTY
1	A	∅4.2 ⌵ ∅8.4	6
2	B	DRILL ∅3.1, ↧ 6 AND M3 HELICOIL TAP	8

REV	CN.NO.	DATE	DESCRIPTION	CHECKED	APPROVED	NEXT ASSEMBLY	ITEM	QTY
4								
3								
2								
1								
0		19.08.17	ORIGINAL			DSA 36 109 0 020	10	1

MATERIAL	FINISH	PROJ.		PRJ.
ALUMINIUM HE-30	YELLOW CC COATING		TOL.GEN. ± IS:2102 TOL.AXIS. ± (MED)	109

DRAWN	CHECKED	APPROVED	DIMNS	SCALE	TITLE
MALIKSAD			mm	NTS	PLATE-03
DATE 19.08.17	DATE	DATE			

KERALA STATE ELECTRONICS DEVELOPMENT CORPORATION LIMITED

DRG. NUMBER: DPD 36 109 0 096

SIZE	ISSUE
A3	1
NO.OF SHEETS	1 / 1

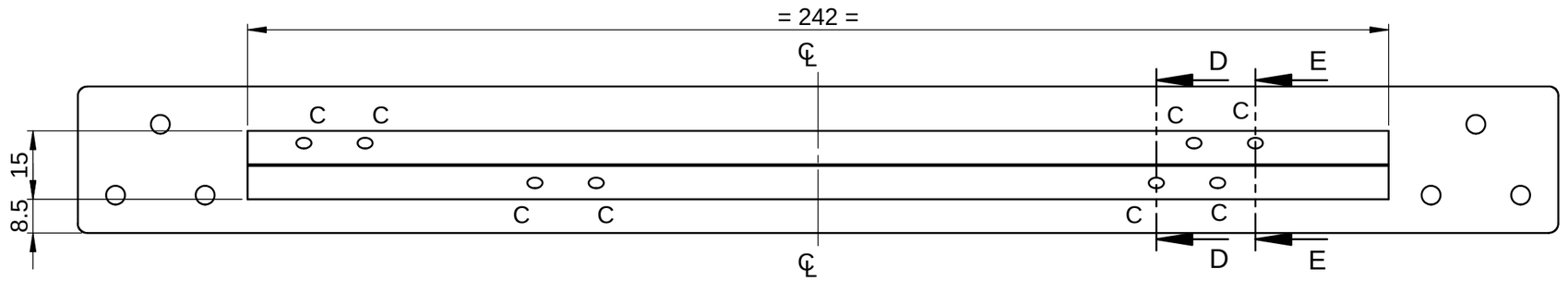

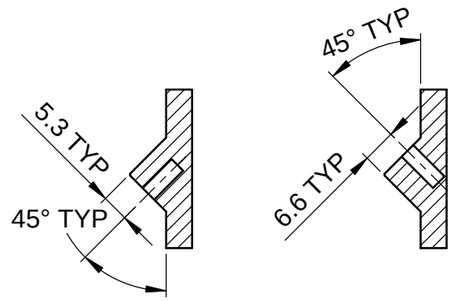

SECTION D-D SECTION E-E

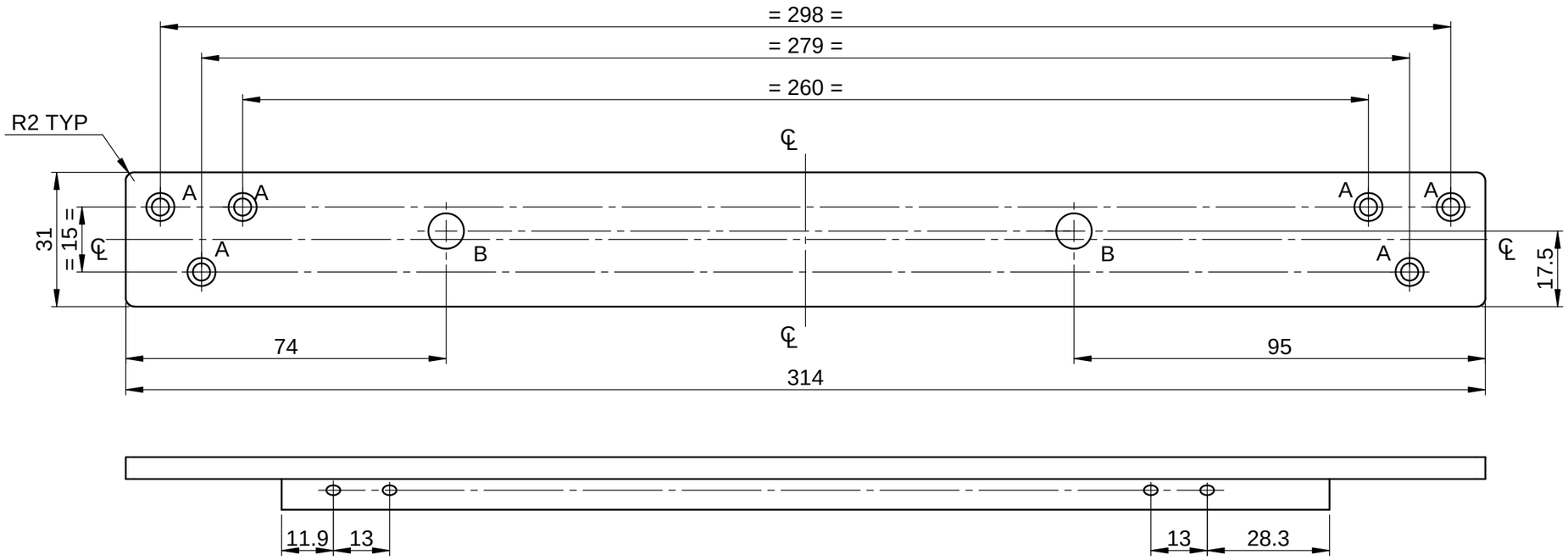

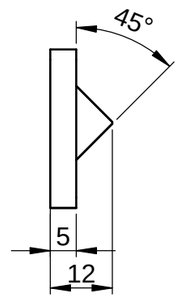

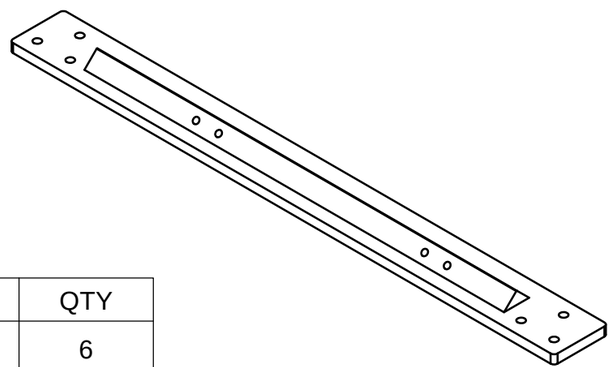

NOTE

1. AVOID SHARP CORNERS AND EDGES
2. ALL BURRS MUST BE REMOVED

SL NO	REF	DESCRIPTION	QTY
1	A	⌀4.2 ⌵ ⌀8.4	6
2	B	DRILL ⌀8.2, ↧7 AND M8 HELICOIL TAP	2
3	C	DRILL ⌀3.1, ↧6 AND M3 HELICOIL TAP	4

REV	CN.NO.	DATE	DESCRIPTION	CHECKED	APPROVED	NEXT ASSEMBLY	ITEM	QTY
4								
3								
2								
1								
0		19.08.17	ORIGINAL			DSA 36 109 0 020	10	1

MATERIAL: ALUMINIUM HE-30	FINISH: YELLOW CC COATING	PROJ.	TOL.GEN. ± IS:2102 TOL.AXIS. ± (MED)	PRJ. 109	
DRAWN: MALIKSAD	CHECKED	APPROVED	DIMNS: mm	SCALE: NTS	TITLE: PLATE-04
DATE 19.08.17	DATE	DATE			

KERALA STATE ELECTRONICS DEVELOPMENT CORPORATION LIMITED.

DRG. NUMBER: DPD 36 109 0 094

SIZE	ISSUE
A3	1
NO.OF SHEETS	1 / 1

RESTRICTED

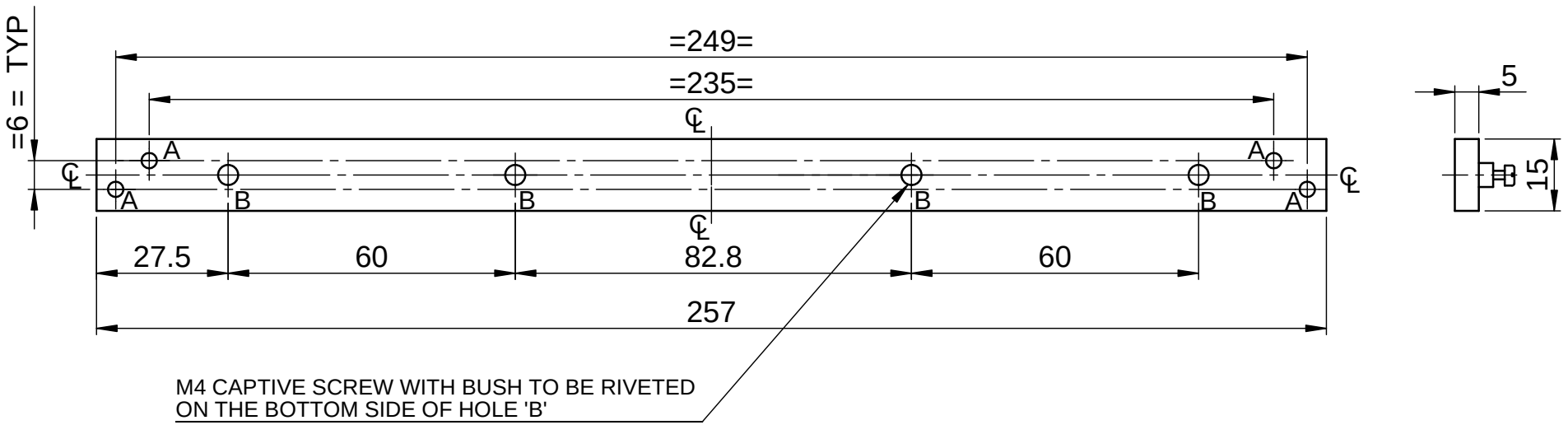

NOTE

1. AVOID SHARP CORNERS AND EDGES
2. BURRS MUST BE REMOVED

SL NO	REF	DESCRIPTION	QTY
1	A	∅3.2	4
2	B	M4x15 CAPTIVE SCREW WITH BUSH	4

REV	CN.NO.	DATE	DESCRIPTION	CHECKED	APPROVED	NEXT ASSEMBLY	ITEM	QTY
4								
3								
2								
1								
0		11.10.17	ORIGINAL			DSA 36 109 0 021	11	2

MATERIAL: ALUMINIUM HE-30	FINISH: YELLOW CC COATING	PROJ.	TOL.GEN. ± IS: 2102 TOL.AXIS. ± (MED.)	PRJ. 109	
DRAWN: MALIKSAD	CHECKED	APPROVED	DIMNS: mm / SCALE: NTS	TITLE: PSU PLATE SUPPORT BAR	
DATE 11.10.17	DATE	DATE	DRG. NUMBER: DPD 36 109 0 051	SIZE: A4	ISSUE: 1
KERALA STATE ELECTRONICS DEVELOPMENT CORPORATION LIMITED				NO.OF SHEETS: 1 / 1	

RESTRICTED

RESTRICTED

RESTRICTED

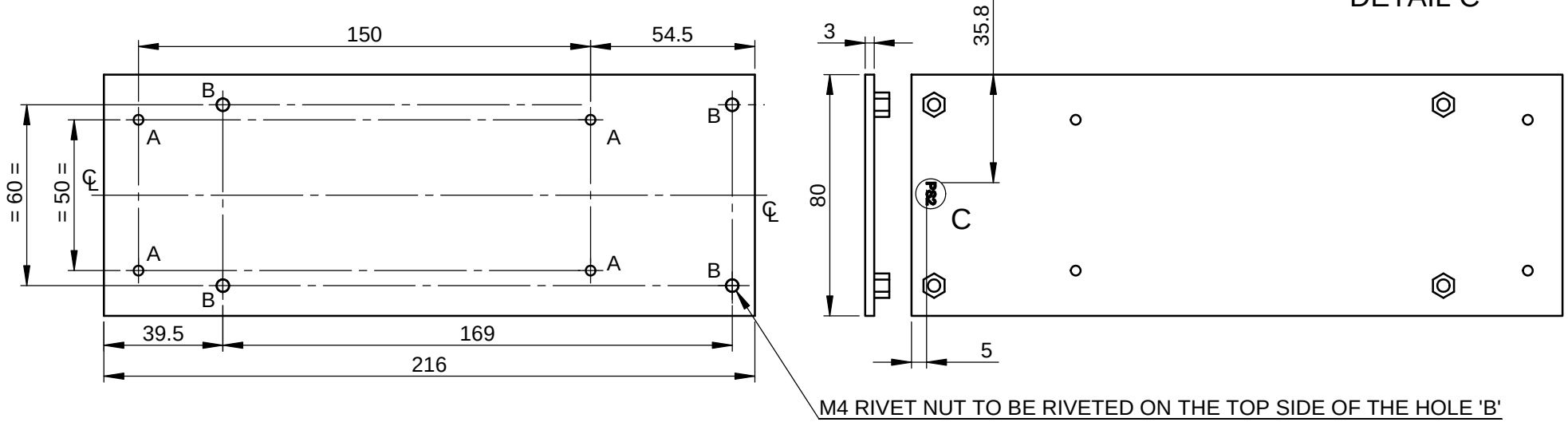

DETAIL C

NOTE:

1. AVOID SHARP EDGES AND CORNERS
2. 3x0.5⩛ TEXT TO BE ENGRAVED AND FILLED WITH BLACK PAINT

SL NO	REF	DESCRIPTION	QTY
1	A	∅3.2	4
2	B	M4 RIVET NUT	4

REV	CN.NO.	DATE	DESCRIPTION	CHECKED	APPROVED	NEXT ASSEMBLY	ITEM	QTY
4								
3								
2								
1								
0		18.09.17	ORIGINAL			DSA 36 109 0 021	9	2

MATERIAL	FINISH	PROJ.		PRJ.
ALUMINIUM H32-5052	YELLOW CC COATING		TOL.GEN. ± IS: 2102 TOL.AXIS. ± (MED.)	109

DRAWN	CHECKED	APPROVED	DIMNS	SCALE	TITLE
MALIKSAD			mm	NTS	PSU PLATE
DATE 18.09.17	DATE	DATE	DRG. NUMBER		SIZE / ISSUE
KERALA STATE ELECTRONICS DEVELOPMENT CORPORATION LIMITED			DPD 36 109 0 053		A4 / 1
					NO.OF SHEETS 1 / 1

RESTRICTED

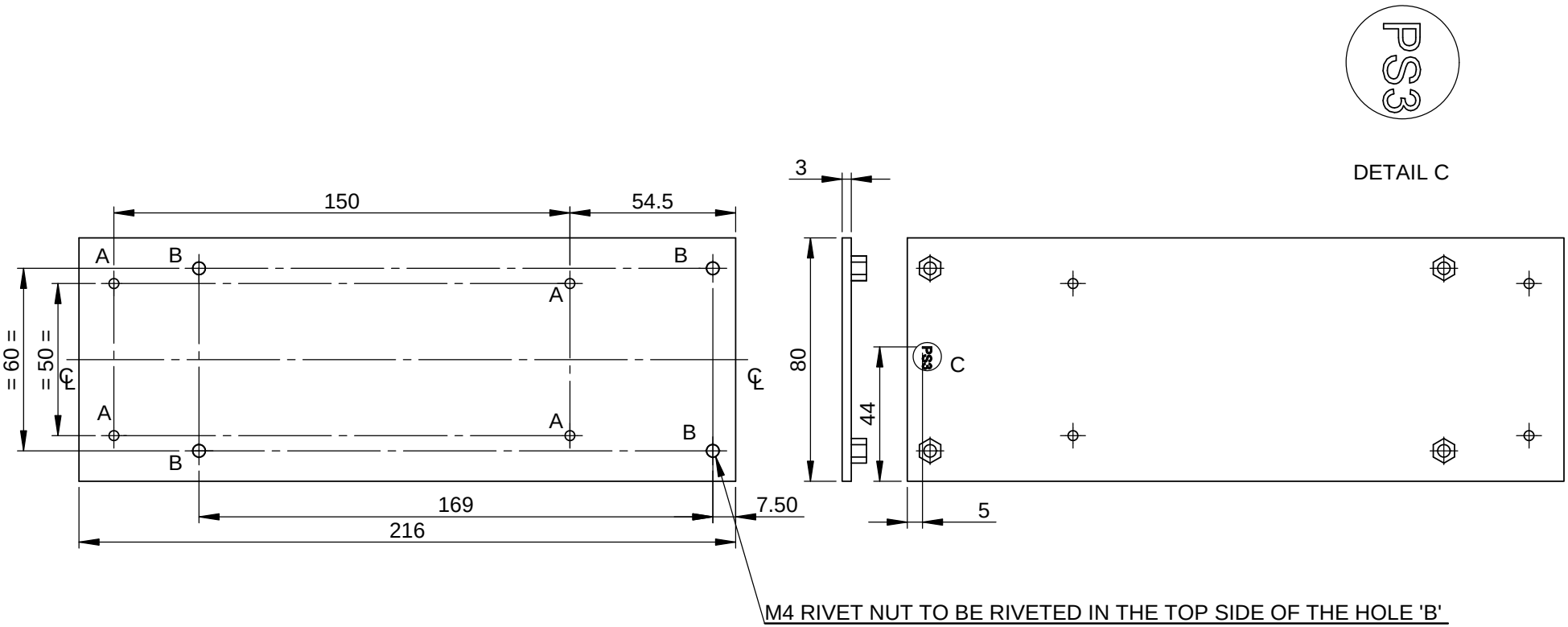

DETAIL C

NOTE:

1. AVOID SHARP EDGES AND CORNERS
2. 3x0.5↓ TEXT TO BE ENGRAVED AND FILLED WITH BLACK PAINT

SL NO	REF	DESCRIPTION	QTY
1	A	∅3.2	4
2	B	M4 RIVET NUT	4

REV	CN.NO.	DATE	DESCRIPTION	CHECKED	APPROVED	NEXT ASSEMBLY	ITEM	QTY
0		10.08.17	ORIGINAL			DSA 36 109 0 021		1

MATERIAL	FINISH	PROJ.	TOL.GEN. ± IS: 2102 TOL.AXIS. ± (MED.)	PRJ.
ALUMINIUM H32-5052	YELLOW CC COATING			109

DRAWN	CHECKED	APPROVED	DIMNS	SCALE	TITLE
MALIKSAD			mm	NTS	PSU PLATE-PS3
DATE 10.08.17	DATE	DATE	DRG. NUMBER		SIZE / ISSUE
KERALA STATE ELECTRONICS DEVELOPMENT CORPORATION LIMITED			DPD 36 109 0 273		A4 / 1
					NO.OF SHEETS 1 / 1

RESTRICTED

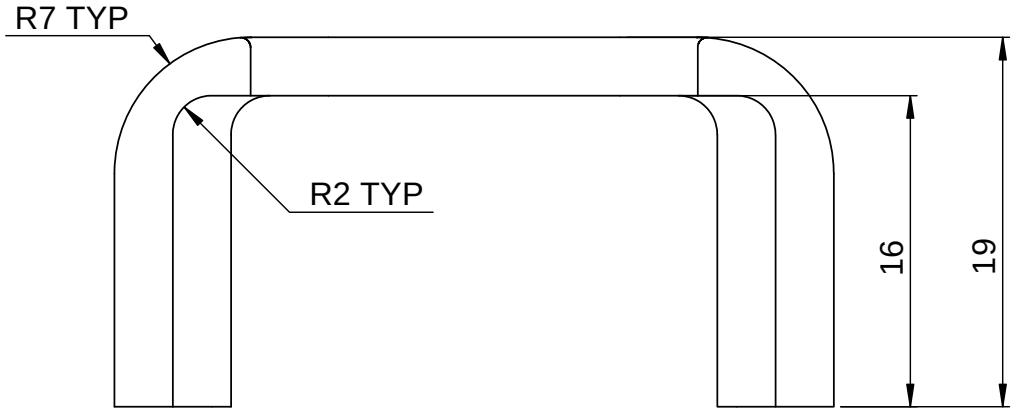

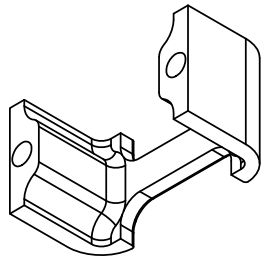

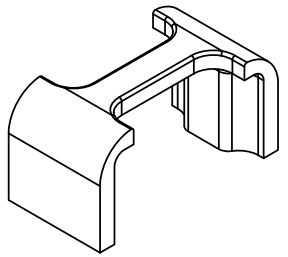

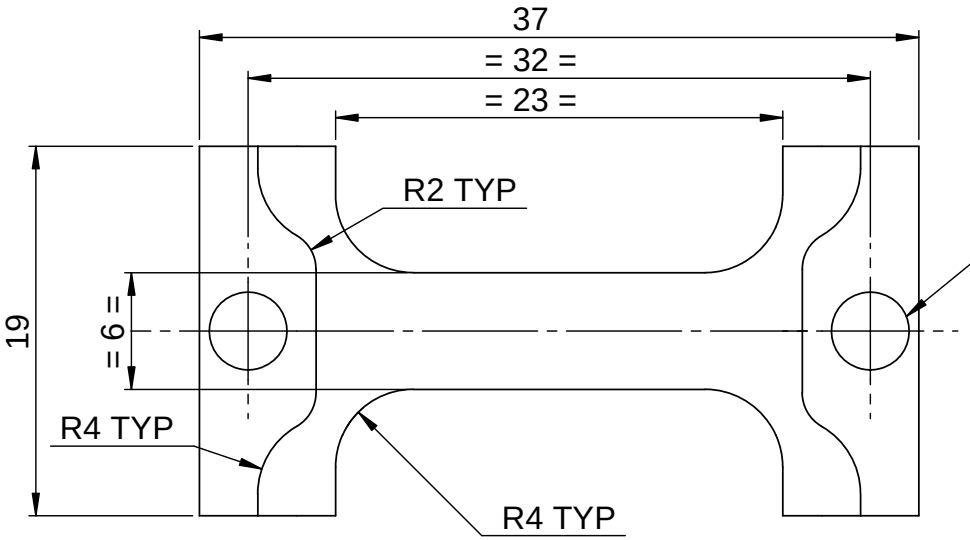

REV	CN.NO.	DATE	DESCRIPTION	CHECKED	APPROVED	NEXT ASSEMBLY	ITEM	QTY
4								
3								
2								
1								
0		17.10.17	ORIGINAL			DSA 36 109 0 201	10	01

MATERIAL: DELRIN	FINISH:	PROJ.	TOL.GEN. ± IS: 2102 TOL.AXIS. ± (MED.)	PRJ. 109	
DRAWN: MALIKSAD	CHECKED:	APPROVED:	DIMNS: mm	SCALE: NTS	TITLE: PTT SWITCH HOOK
DATE: 17.10.17	DATE:	DATE:	DRG. NUMBER: DPD 36 109 0 201	SIZE: A4	ISSUE: 1
KERALA STATE ELECTRONICS DEVELOPMENT CORPORATION LIMITED				NO.OF SHEETS: 1 / 1	

RESTRICTED

SL NO	REF	DESCRIPTION	QTY
1	A	∅4.5	6
2	B	∅6.2	4
3	C	∅3.2	6
4	D	M3 RIVET NUT	2

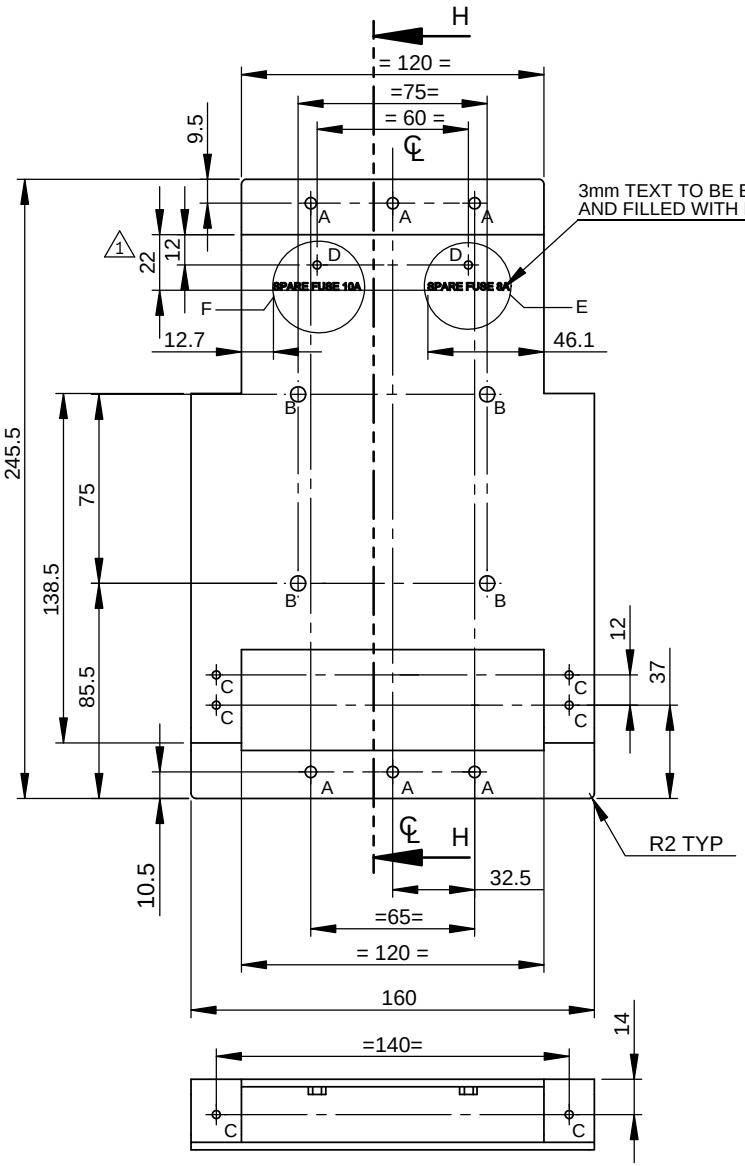

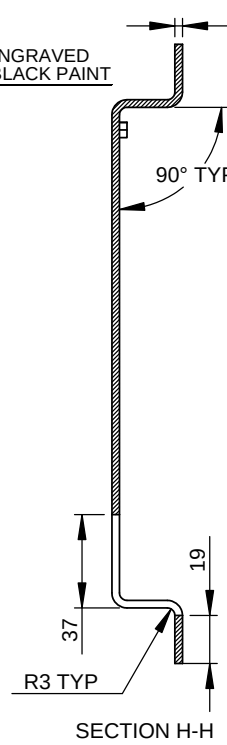

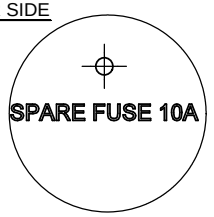

DETAIL F

DETAIL E

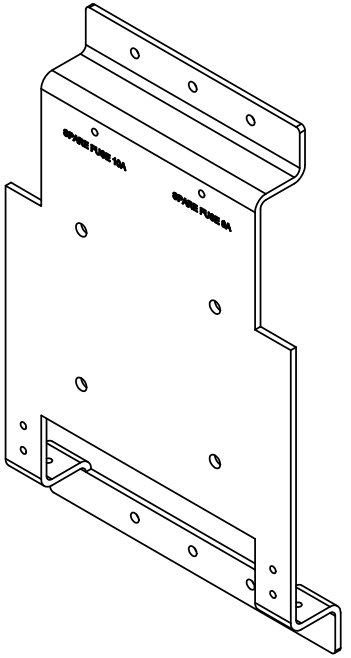

REV	CN.NO.	DATE	DESCRIPTION	CHECKED	APPROVED	NEXT ASSEMBLY	ITEM	QTY
4								
3								
2								
1		21.08.19	REVISED					
0		03.08.17	ORIGINAL			DSA 36 109 0 011	03	01

MATERIAL	FINISH	PROJ.	TOL.GEN. ± / TOL.AXIS. ±	PRJ.
3mm ALUMINIUM 5052-H32	YELLOW CC COATING		IS: 2102 (MED.)	109

DRAWN	CHECKED	APPROVED	DIMNS	SCALE	TITLE
MALIKSAD			mm	NTS	REAR DISPLAY COVER
DATE 21.08.19	DATE	DATE	DRG. NUMBER		SIZE: A4 / ISSUE: 1
KERALA STATE ELECTRONICS DEVELOPMENT CORPORATION LIMITED			DPD 36 109 0 117		NO.OF SHEETS: 1 / 1

RESTRICTED

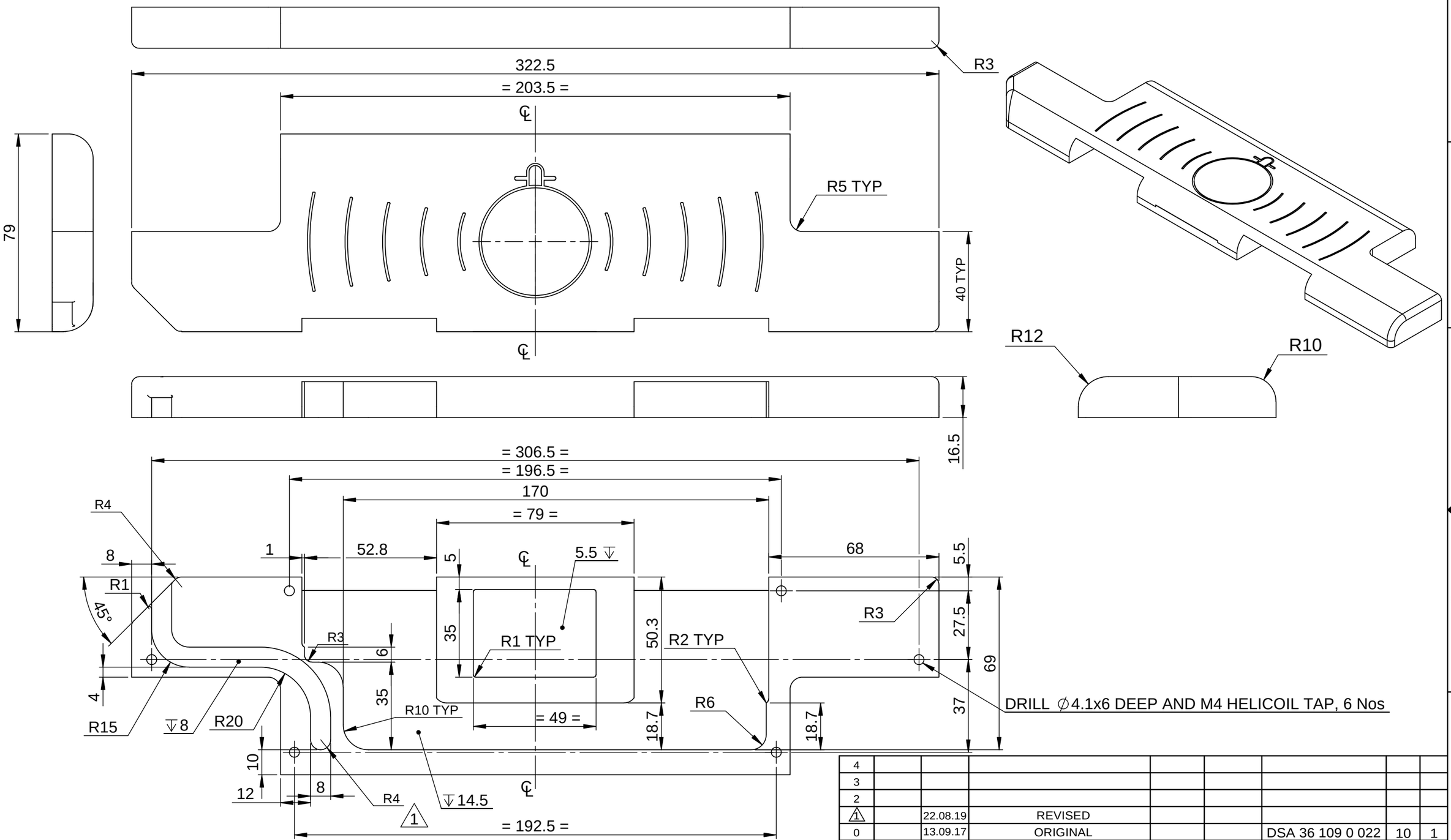

REV	CN.NO.	DATE	DESCRIPTION	CHECKED	APPROVED	NEXT ASSEMBLY	ITEM	QTY
4								
3								
2								
1		22.08.19	REVISED					
0		13.09.17	ORIGINAL			DSA 36 109 0 022	10	1

MATERIAL: ALUMINIUM HE-30	FINISH: YELLOW CC COATNG	PROJ.	TOL.GEN. ± IS:2102 TOL.AXIS. ± (MED)	PRJ. 109	
DRAWN: MALIKSAD	CHECKED	APPROVED	DIMNS: mm / SCALE: NTS	TITLE: REAR INTERMEDIATE PLATE	
DATE 22.08.19	DATE	DATE	DRG. NUMBER: DPD 36 109 0 110	SIZE: A3	ISSUE: 1
KERALA STATE ELECTRONICS DEVELOPMENT CORPORATION LIMITED.				NO.OF SHEETS: 1 / 2	

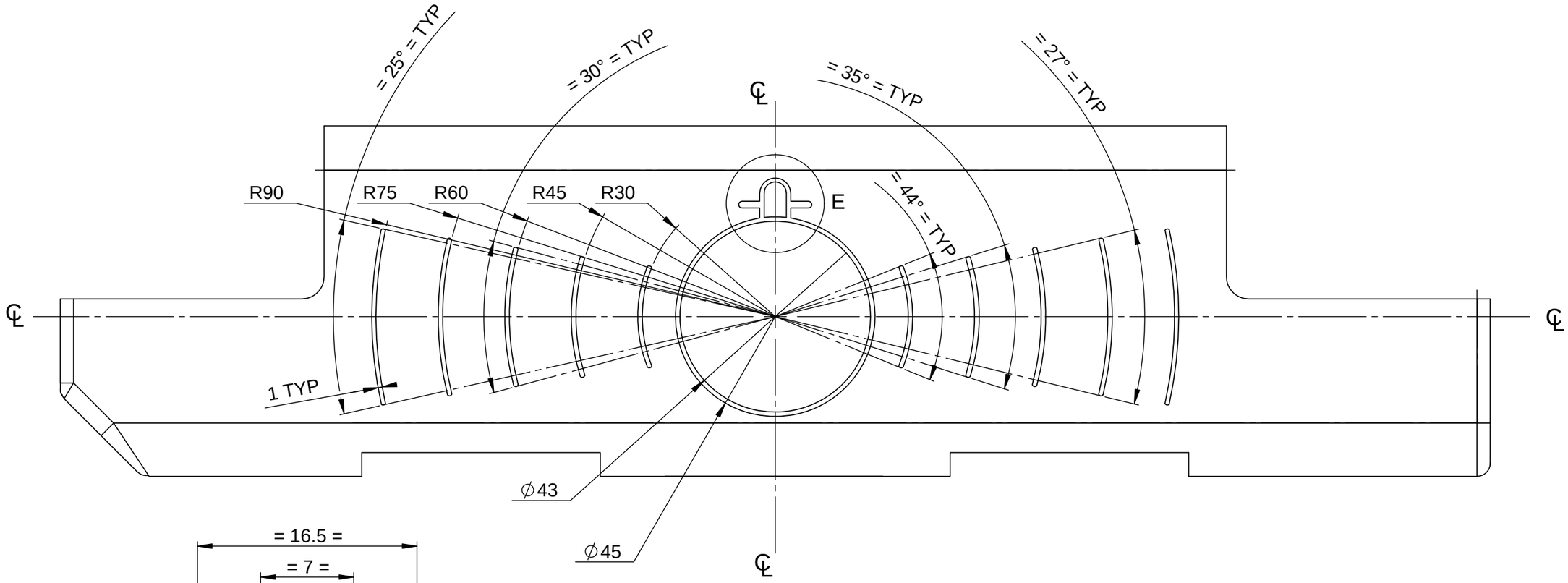

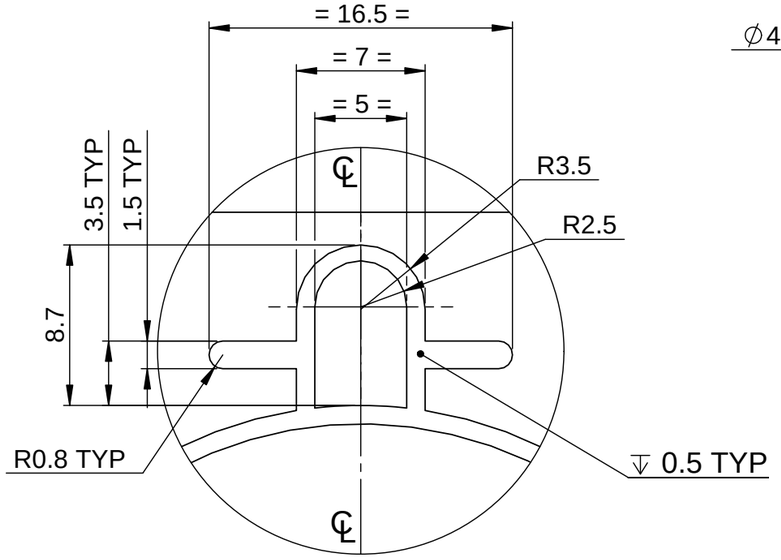

DETAIL E

1

NOTE:

1. AVOID SHARP EDGES AND CORNERS
2. DIMENSIONLESS FEATURES TO BE MEASURED FROM IGES

REV	CN.NO.	DATE	DESCRIPTION	CHECKED	APPROVED	NEXT ASSEMBLY	ITEM	QTY
4								
3								
2								
1		22.08.19	REVISED					
0		13.09.17	ORIGINAL			DSA 36 109 0 022	10	1

MATERIAL: ALUMINIUM HE-30	FINISH: YELLOW CC COATING	PROJ.	TOL.GEN. ± IS:2102 TOL.AXIS. ± (MED)	PRJ. 109	
DRAWN: MALIKSAD	CHECKED	APPROVED	DIMNS: mm	SCALE: NTS	TITLE: REAR INTER-MEDIATE PLATE
DATE: 22.08.19	DATE	DATE	DRG. NUMBER: DPD 36 109 0 110	SIZE: A3	ISSUE: 1
KERALA STATE ELECTRONICS DEVELOPMENT CORPORATION LIMITED.				NO.OF SHEETS: 2 / 2	

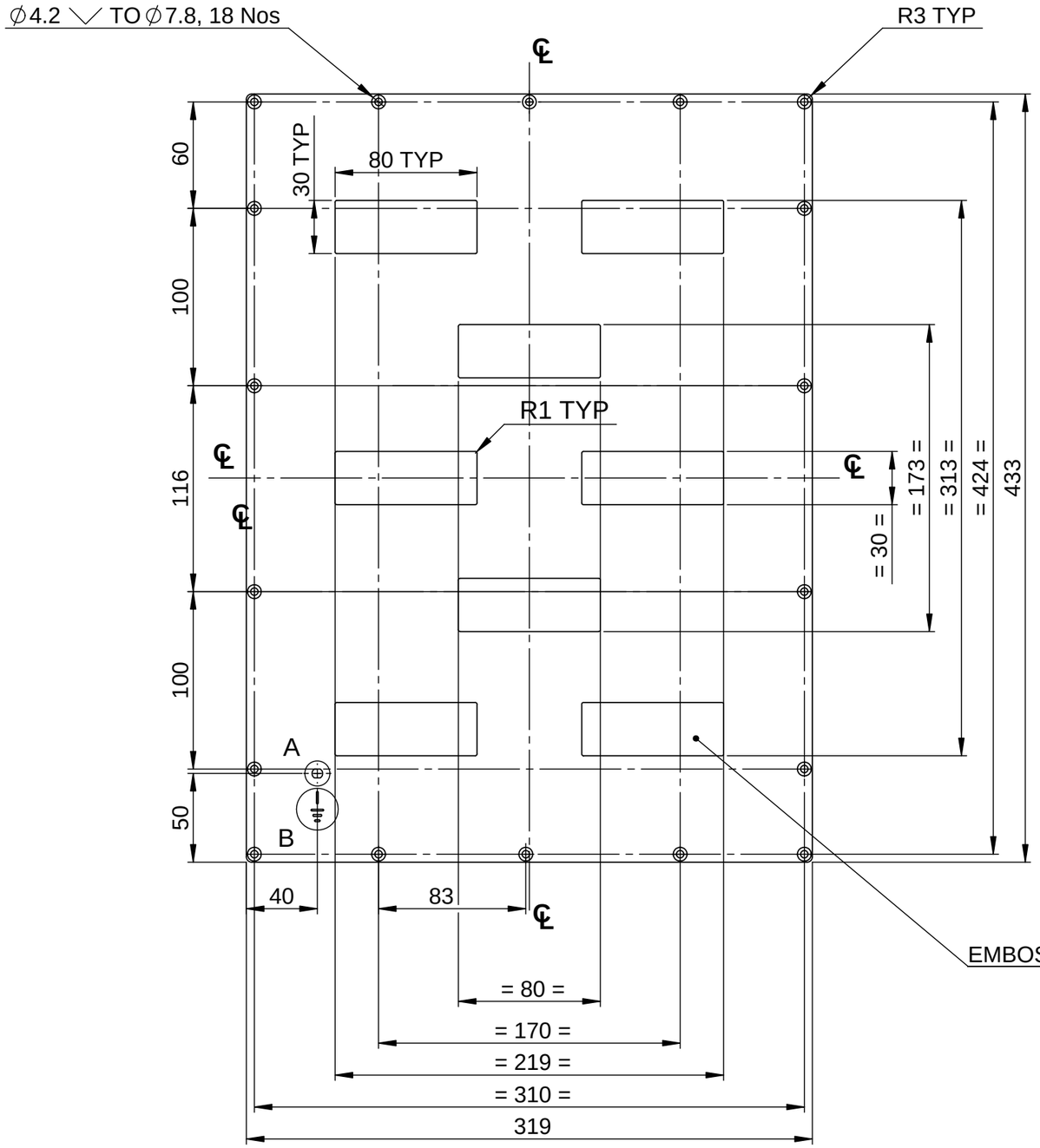

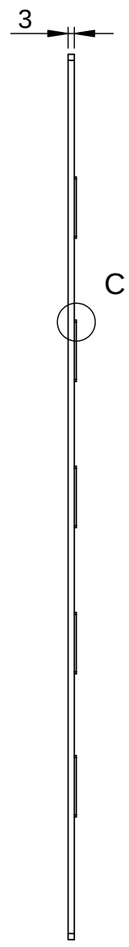

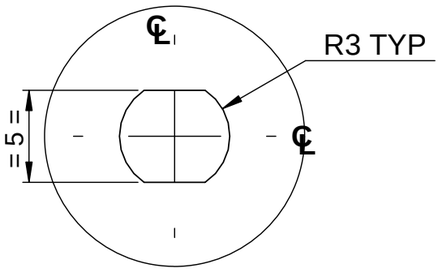

DETAIL A

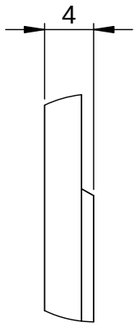

DETAIL C

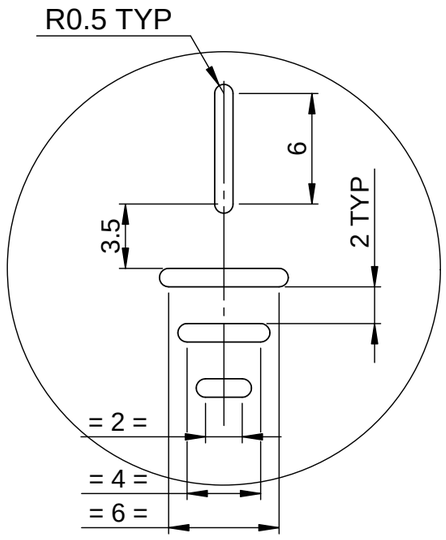

DETAIL B

NOTE:

1. AVOID SHARP EDGES AND CORNERS
2. EARTH SYMBOL TO BE ENGRAVED AND FILLED WITH BLACK PAINT

REV	CN.NO.	DATE	DESCRIPTION	CHECKED	APPROVED	NEXT ASSEMBLY	ITEM	QTY
4								
3								
2								
1								
0		27.08.17	ORIGINAL			DSA 36 109 0 012	1	1

MATERIAL	FINISH	PROJ.		PRJ.
ALUMINIUM H32-5052	YELLOW CC COATING		TOL.GEN. ± IS:2102 TOL.AXIS. ± (MED)	109

DRAWN	CHECKED	APPROVED	DIMNS	SCALE	TITLE
MALIKSAD			mm	NTS	REAR PLATE
DATE 27.08.17	DATE	DATE			

KERALA STATE ELECTRONICS DEVELOPMENT CORPORATION LIMITED

DRG. NUMBER	SIZE	ISSUE
DPD 36 109 0 124	A3	1
	NO.OF SHEETS	1 / 1

RESTRICTED

RESTRICTED

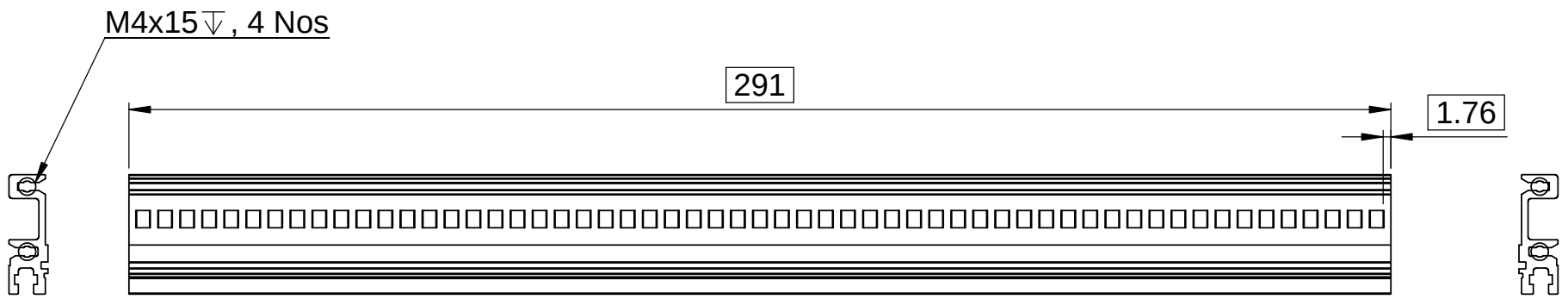

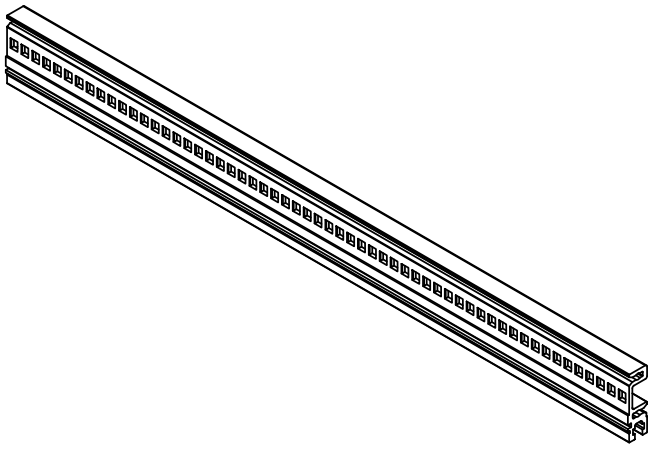

NOTE:

AVOID SHARP EDGES AND CORNERS

REV	CN.NO.	DATE	DESCRIPTION	CHECKED	APPROVED	NEXT ASSEMBLY	ITEM	QTY
4								
3								
2								
1								
0		19.08.17	ORIGINAL			DSA 36 109 0 012	7	1

MATERIAL: STANDARD PROFILE SCHROFF PART NO:34560-563	FINISH: -	PROJ.	TOL.GEN. ± IS: 2102 TOL.AXIS. ± (MED.)	PRJ. 109	
DRAWN: MALIKSAD	CHECKED	APPROVED	DIMNS: mm / SCALE: NTS	TITLE: REAR PROFILE	
DATE 19.08.17	DATE	DATE	DRG. NUMBER: DPD 36 109 0 237	SIZE: A4	ISSUE: 1
KERALA STATE ELECTRONICS DEVELOPMENT CORPORATION LIMITED				NO.OF SHEETS: 1 / 1	

RESTRICTED

RESTRICTED

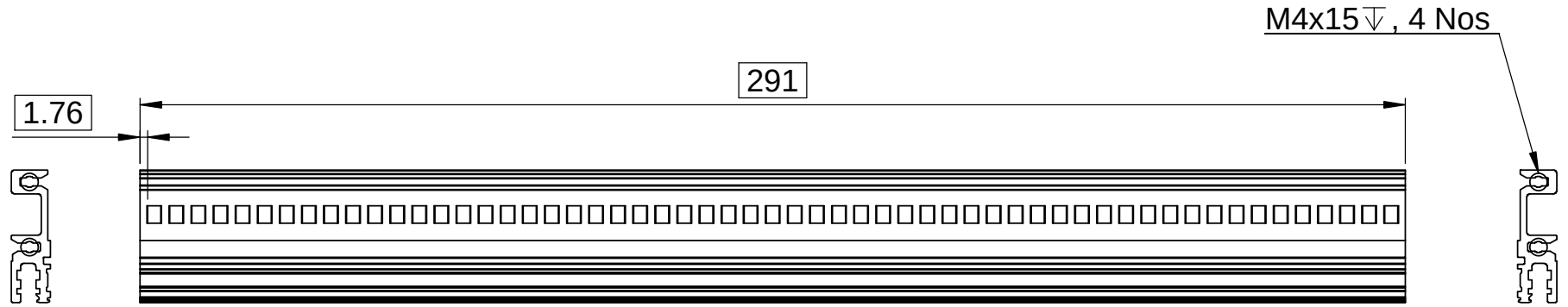

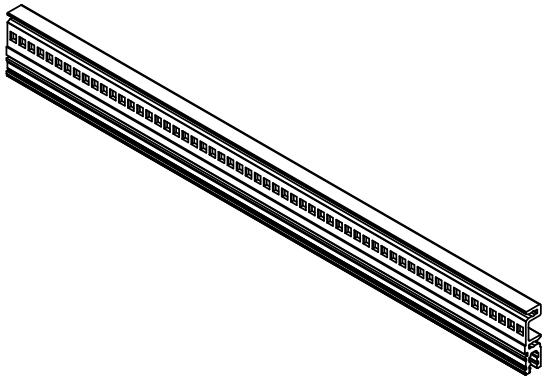

NOTE:

AVOID SHARP EDGES AND CORNERS

4								
3								
2								
1								
0		19.08.17	ORIGINAL			DSA 36 109 0 018	06	2
REV	CN.NO.	DATE	DESCRIPTION	CHECKED	APPROVED	NEXT ASSEMBLY	ITEM	QTY

MATERIAL: STANDARD PROFILE SCHROFF PART NO:34560-763	FINISH: -	PROJ.	TOL.GEN. ± IS: 2102 TOL.AXIS. ± (MED.)	PRJ. 109		
DRAWN: MALIKSAD	CHECKED	APPROVED	DIMNS: mm	SCALE: NTS	TITLE: REAR PROFILE	
DATE 19.08.17	DATE	DATE	DRG. NUMBER: DPD 36 109 0 227		SIZE: A4	ISSUE: 1
KERALA STATE ELECTRONICS DEVELOPMENT CORPORATION LIMITED					NO.OF SHEETS: 1 / 1	

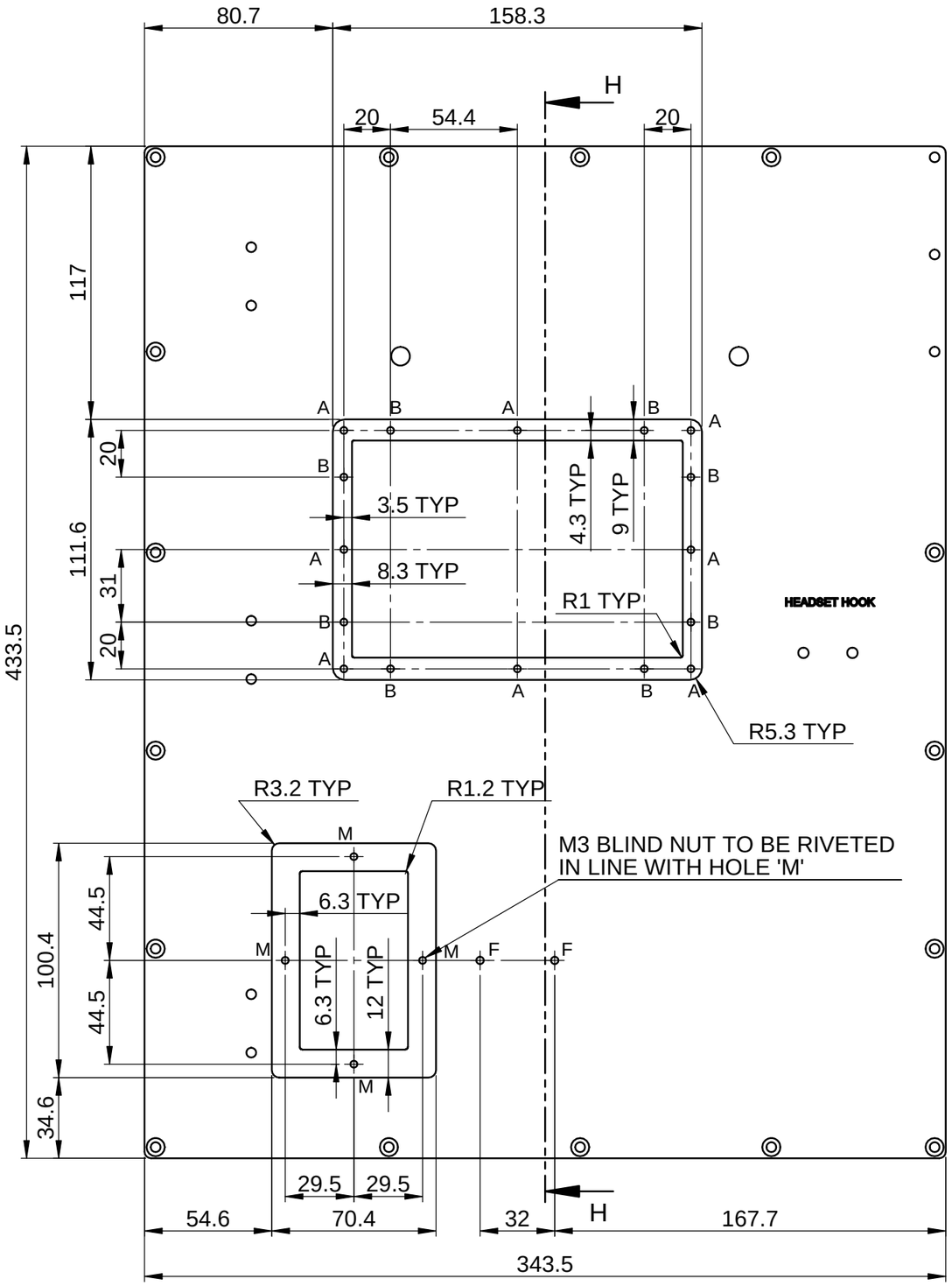

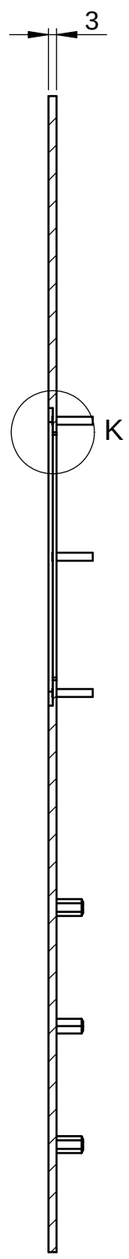

SECTION H-H

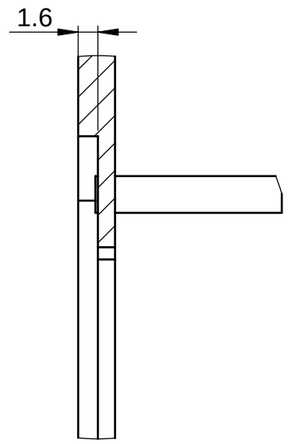

DETAIL K

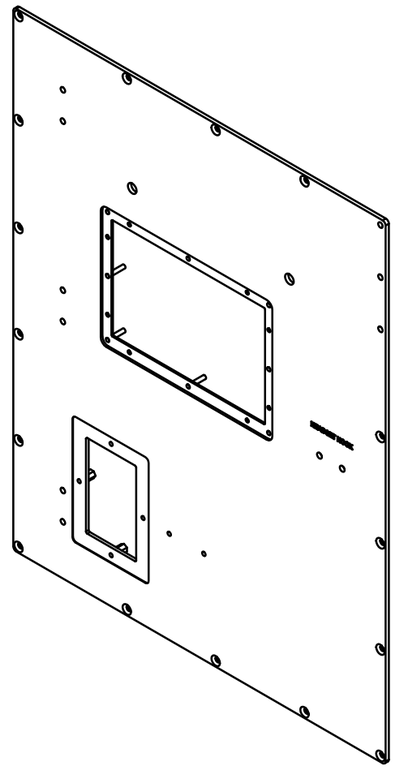

REV	CN.NO.	DATE	DESCRIPTION	CHECKED	APPROVED	NEXT ASSEMBLY	ITEM	QTY
4								
3								
2								
1		22.08.19	REVISED					
0		19.08.17	ORIGINAL			DSA 36 109 0 015	4	1

MATERIAL	FINISH	PROJ.		PRJ.
ALUMINIUM HE-30	YELLOW CC COATING		TOL.GEN. ± IS:2102 TOL.AXIS. ± (MED)	109

DRAWN	CHECKED	APPROVED	DIMNS	SCALE	TITLE
MALIKSAD			mm	NTS	RIGHT PLATE
DATE 22.08.19	DATE	DATE			

KERALA STATE ELECTRONICS DEVELOPMENT CORPORATION LIMITED.

DRG. NUMBER: DPD 36 109 0 057

SIZE	ISSUE
A3	1
NO.OF SHEETS	1 / 2

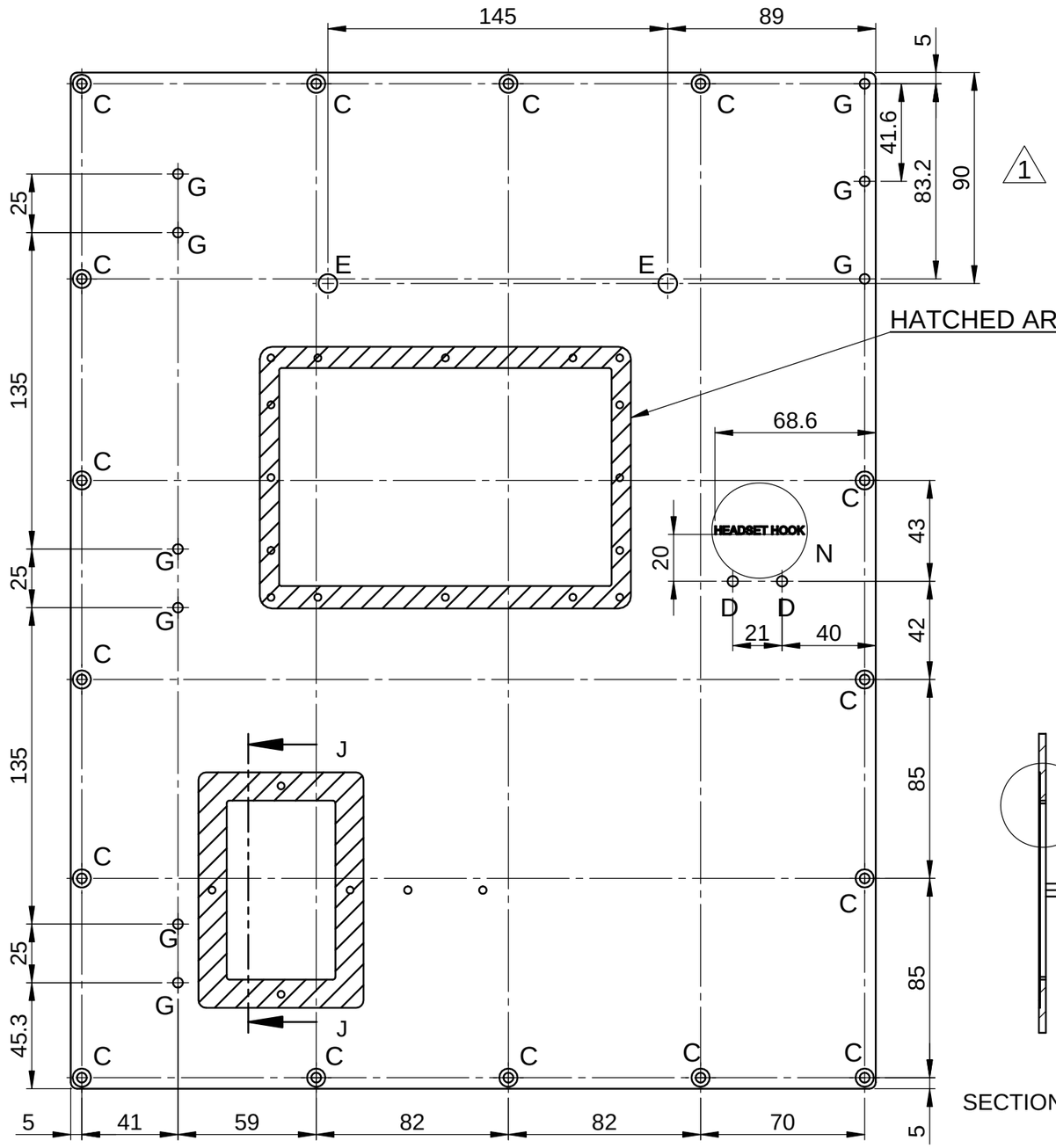

HATCHED AREA TO BE MASKED BEFORE PAINTING

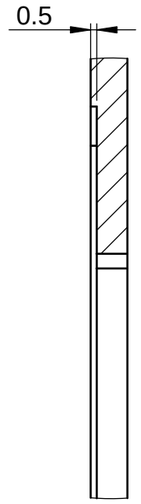

DETAIL L

DETAIL N

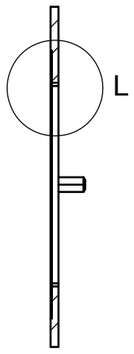

SECTION J-J

NOTE

1. AVOID SHARP CORNERS AND EDGES
2. 3x0.5↧ TEXT TO BE ENGRAVED AND FILLED WITH BLACK PAINT.

1

SL NO	REF	DESCRIPTION	QTY
1	A	M3x16 CLINCH SCREW	8
2	B	∅3 HOLES FOR RIVET	8
3	C	∅4.2 ⌵ ∅7.8	16
4	D	∅4.5	2
5	E	∅8.2	2
6	F	∅3.2	2
7	G	∅4.2	9
8	M	M3x6 BLIND NUT	4

REV	CN.NO.	DATE	DESCRIPTION	CHECKED	APPROVED	NEXT ASSEMBLY	ITEM	QTY
4								
3								
2								
1		22.08.19	REVISED					
0		19.08.17	ORIGINAL			DSA 36 109 0 015	4	1

MATERIAL: ALUMINIUM HE-30
FINISH: YELLOW CC COATING
PROJ.
TOL.GEN. ± IS:2102
TOL.AXIS. ± (MED)
PRJ. 109

DRAWN: MALIKSAD
CHECKED:
APPROVED:
DIMNS: mm
SCALE: NTS
TITLE: RIGHT PLATE

DATE 22.08.19
DATE
DATE

KERALA STATE ELECTRONICS DEVELOPMENT CORPORATION LIMITED

DRG. NUMBER: DPD 36 109 0 057

SIZE: A3
ISSUE: 1
NO.OF SHEETS: 2 / 2

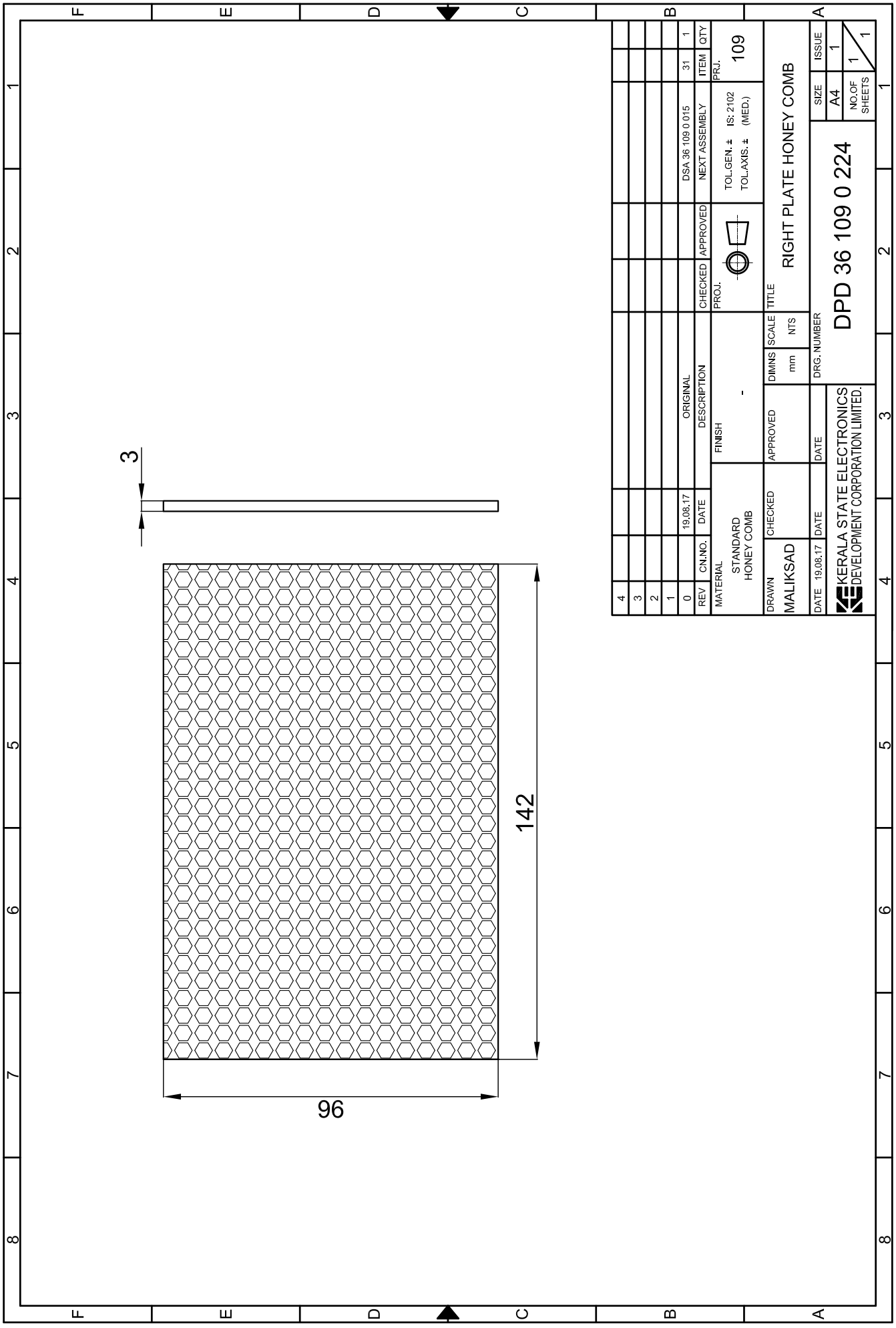
3
142
96
4
3
2
1
0
REV
CN.NO.
DATE
ORIGINAL
19.08.17
DESCRIPTION
CHECKED
APPROVED
DSA 36 109 0 015
31
NEXT ASSEMBLY
ITEM
1
QTY
PRJ.
109
TOL.GEN. ± IS: 2102
TOL.AXIS. ± (MED.)
PROJ.
MATERIAL
STANDARD
HONEY COMB
FINISH
-
TITLE
RIGHT PLATE HONEY COMB
DRAWN
MALIKSAD
CHECKED
APPROVED
DIMNS
mm
SCALE
NTS
DRG. NUMBER
DPD 36 109 0 224
DATE 19.08.17
DATE
DATE
KERALA STATE ELECTRONICS
DEVELOPMENT CORPORATION LIMITED.
SIZE
A4
ISSUE
1
NO.OF
SHEETS
1
1

RESTRICTED

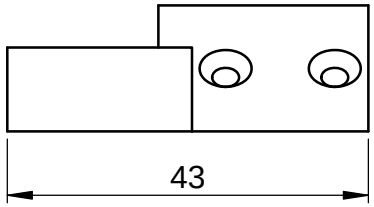

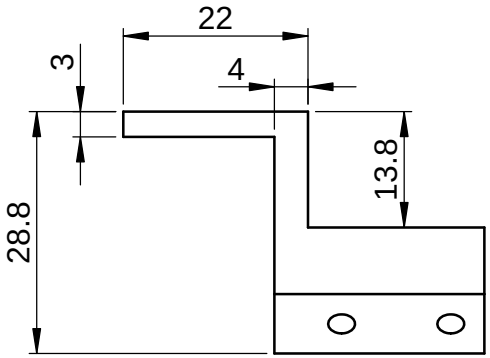

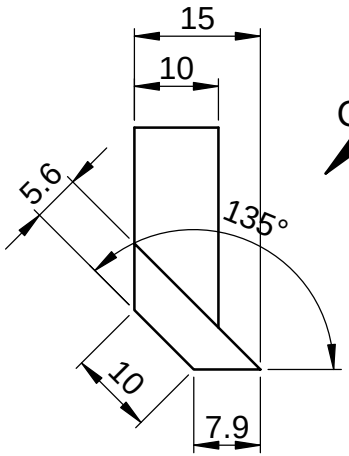

C

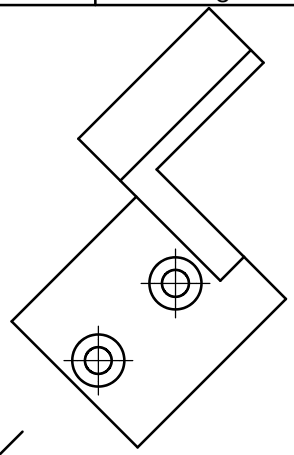

VIEW C

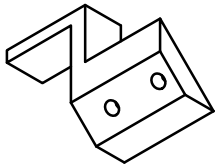

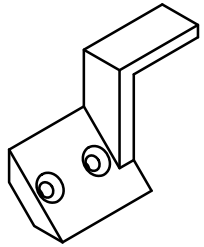

A

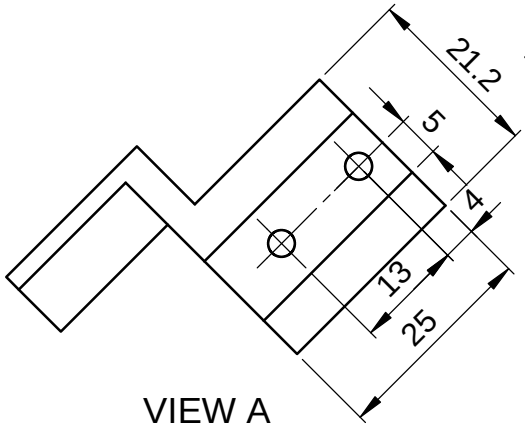

VIEW A

NOTE:

AVOID SHARP EDGES AND CORNERS

4								
3								
2								
1								
0		19.09.17	ORIGINAL			DSA 36 109 0 020	12	4
REV	CN.NO.	DATE	DESCRIPTION	CHECKED	APPROVED	NEXT ASSEMBLY	ITEM	QTY

MATERIAL: ALUMINIUM HE-30	FINISH: 25 MICRON BLACK ANODISING	PROJ.	TOL.GEN. ± IS: 2102 TOL.AXIS. ± (MED.)	PRJ. 109	
DRAWN: MALIKSAD	CHECKED	APPROVED	DIMNS: mm	SCALE: NTS	TITLE: SHOCK ROACK CLAMP-1
DATE 19.09.17	DATE	DATE	DRG. NUMBER: DPD 36 109 0 032	SIZE: A4	ISSUE: 1
KERALA STATE ELECTRONICS DEVELOPMENT CORPORATION LIMITED				NO.OF SHEETS: 1 / 1	

RESTRICTED

RESTRICTED

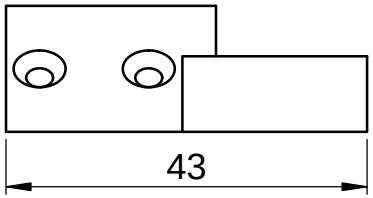

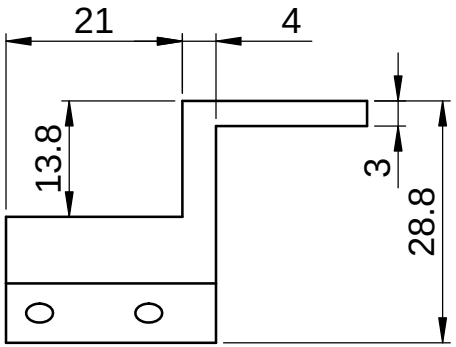

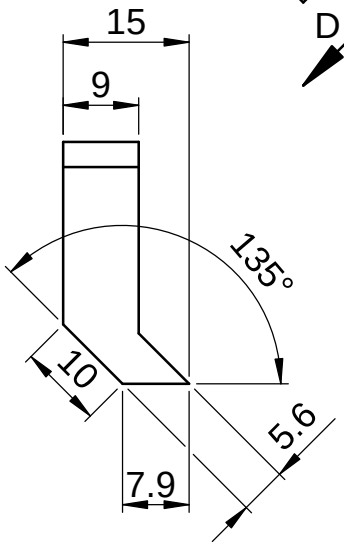

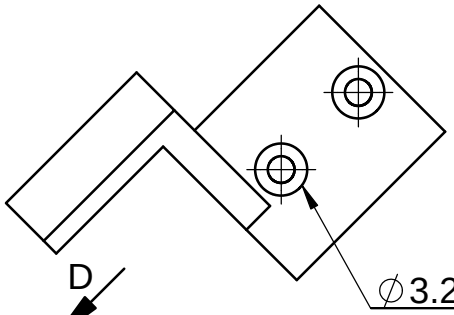

VIEW D

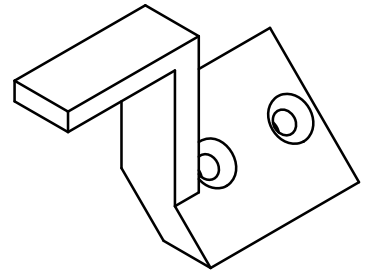

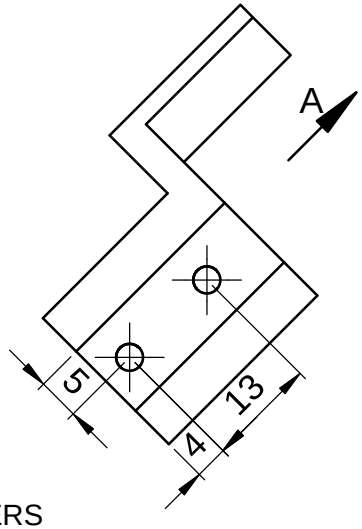

VIEW A

NOTE:

AVOID SHARP EDGES AND CORNERS

4								
3								
2								
1								
0		16.09.17	ORIGINAL			DSA 36 109 0 021	22	4
REV	CN.NO.	DATE	DESCRIPTION	CHECKED	APPROVED	NEXT ASSEMBLY	ITEM	QTY

MATERIAL: ALUMINUM HE-30	FINISH: 25 MICRON BLACK ANODISING	PROJ.	TOL.GEN. ± IS: 2102 TOL.AXIS. ± (MED.)	PRJ. 109	
DRAWN: MALIKSAD	CHECKED	APPROVED	DIMNS: mm / SCALE: NTS	TITLE: SHOCK ROACK CLAMP-2	
DATE 16.09.17	DATE	DATE	DRG. NUMBER: DPD 36 109 0 172	SIZE: A4	ISSUE: 1
KERALA STATE ELECTRONICS DEVELOPMENT CORPORATION LIMITED				NO.OF SHEETS: 1 / 1	

RESTRICTED

RESTRICTED

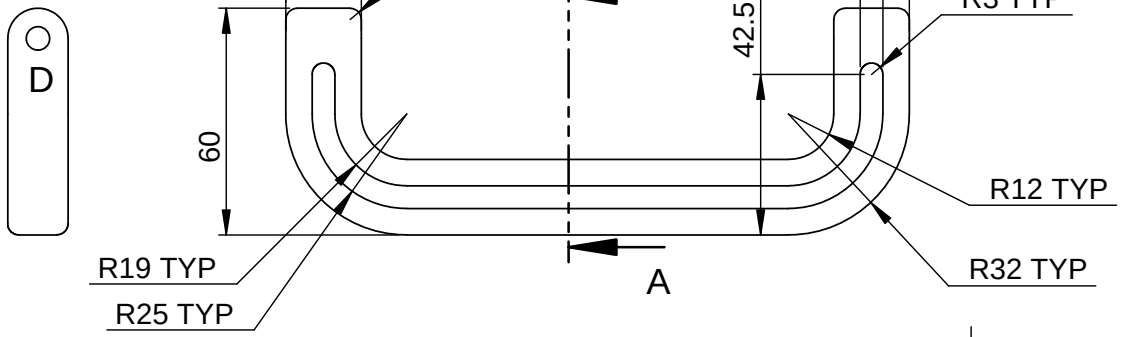

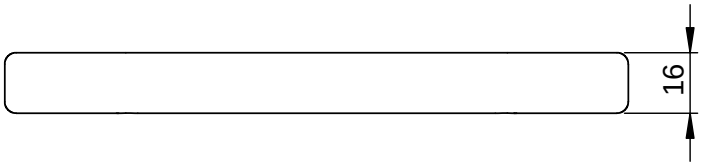

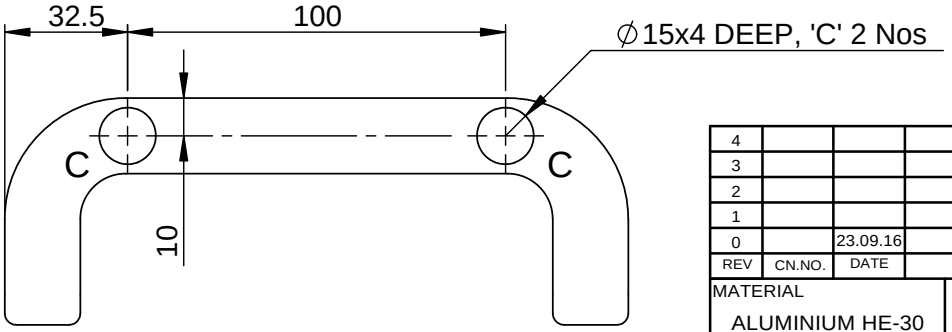

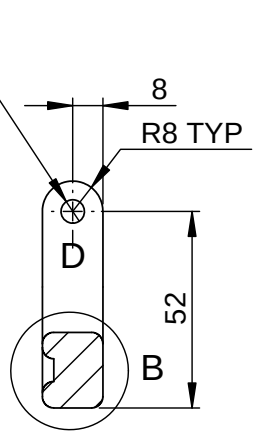

SECTION A-A

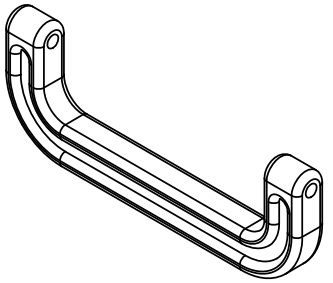

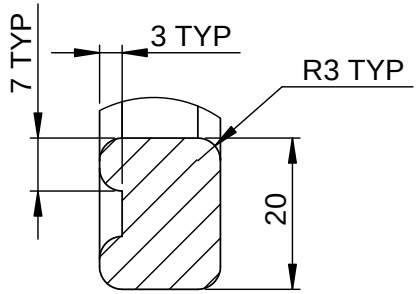

DETAIL B

NOTE

1. AVOID SHARP EDGES AND CORNERS
2. ALL BURRS TO BE REMOVED

REV	CN.NO.	DATE	DESCRIPTION	CHECKED	APPROVED	NEXT ASSEMBLY	ITEM	QTY
4								
3								
2								
1						DSA 36 109 0 019	17	01
0		23.09.16	ORIGINAL			DSA 36 109 0 015	08	01

MATERIAL: ALUMINIUM HE-30	FINISH: YELLOW CC COATING	PROJ.	TOL.GEN. ± IS: 2102 TOL.AXIS. ± (MED.)	PRJ. 109	
DRAWN: MALIKSAD	CHECKED	APPROVED	DIMNS: mm / SCALE: NTS	TITLE: SIDE HANDLE	
DATE 23.09.16	DATE	DATE	DRG. NUMBER: DPD 36 109 0 061	SIZE: A4	ISSUE: 1
KERALA STATE ELECTRONICS DEVELOPMENT CORPORATION LIMITED				NO.OF SHEETS: 1 / 1	

RESTRICTED

RESTRICTED

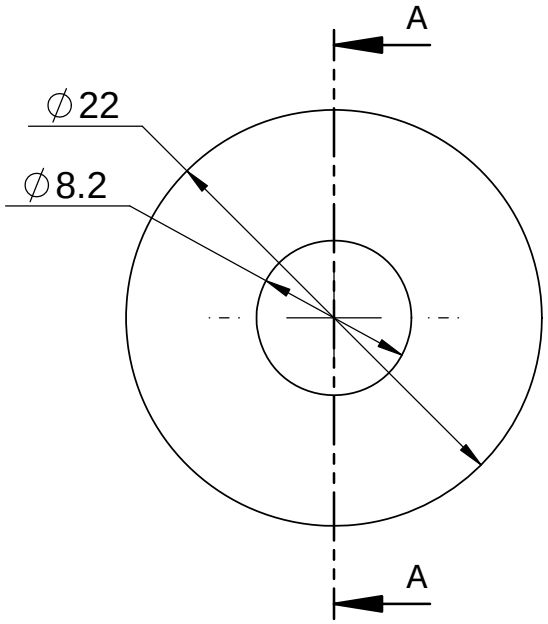

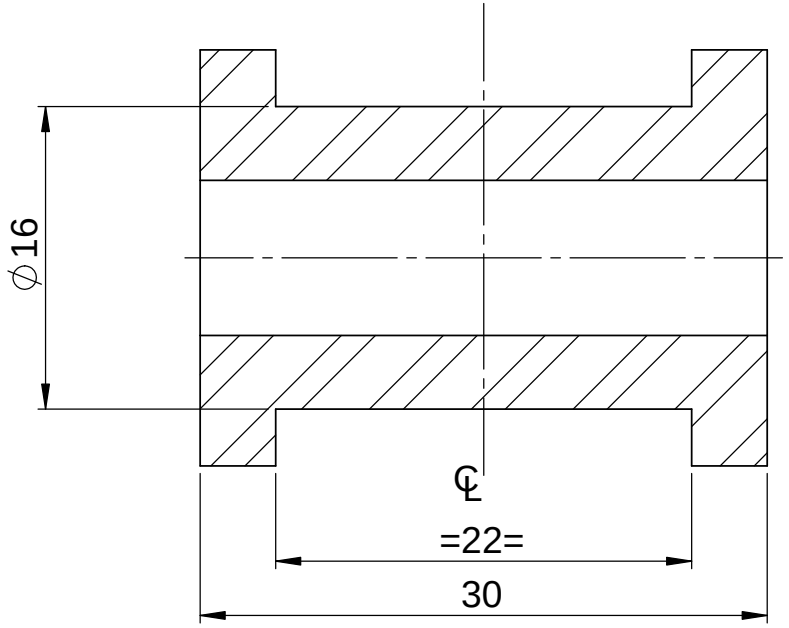

SECTION A-A

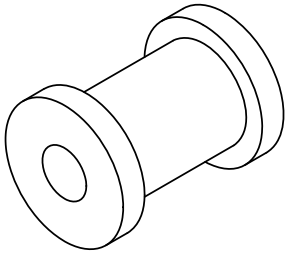

NOTE

1. AVOID SHARP EDGES AND CORNERS

REV	CN.NO.	DATE	DESCRIPTION	CHECKED	APPROVED	NEXT ASSEMBLY	ITEM	QTY
4								
3								
2								
1								
0		12.08.17	ORIGINAL			DSA 36 109 0 018	9	4

MATERIAL	FINISH	PROJ.		PRJ.
DELRIN	--		TOL.GEN. ± IS: 2102 TOL.AXIS. ± (MED.)	109

DRAWN	CHECKED	APPROVED	DIMNS	SCALE	TITLE
MALIKSAD			mm	NTS	SPACER FOR CANOPY
DATE 12.08.17	DATE	DATE	DRG. NUMBER		SIZE / ISSUE
KERALA STATE ELECTRONICS DEVELOPMENT CORPORATION LIMITED			DPD 36 109 0 079		A4 / 1
					NO.OF SHEETS 1/1

RESTRICTED

RESTRICTED

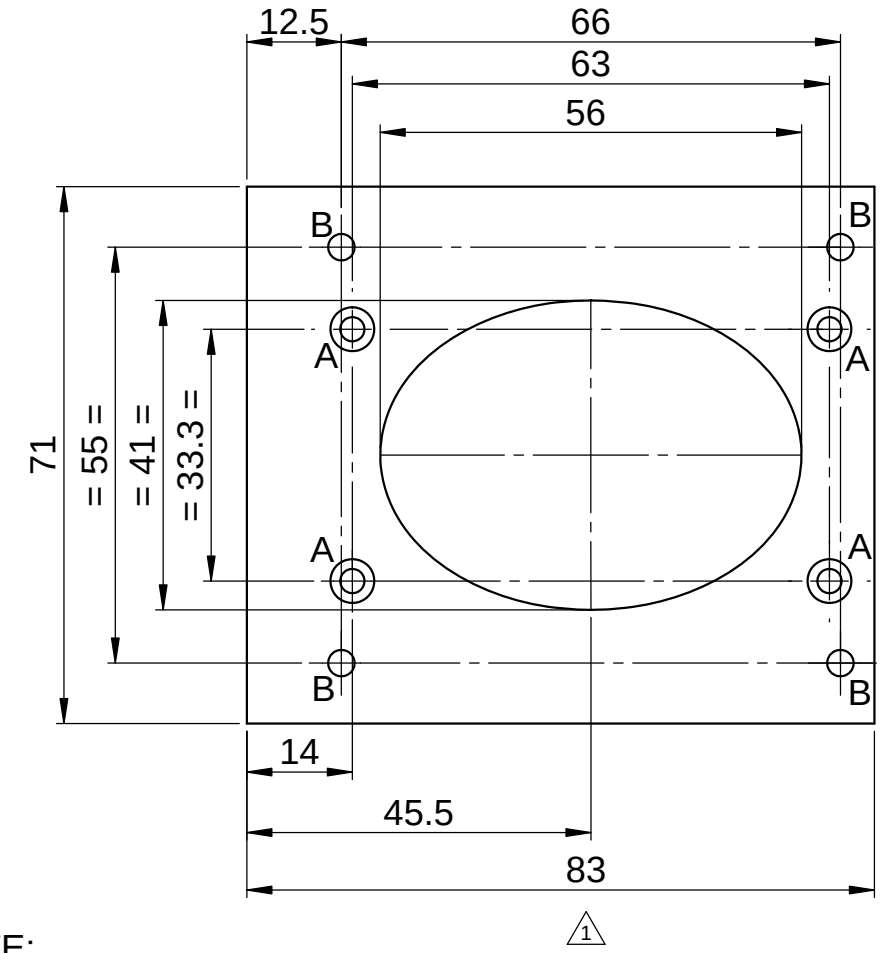

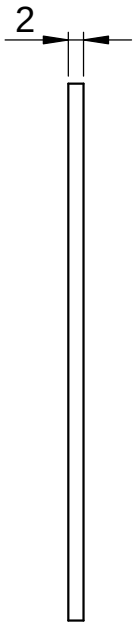

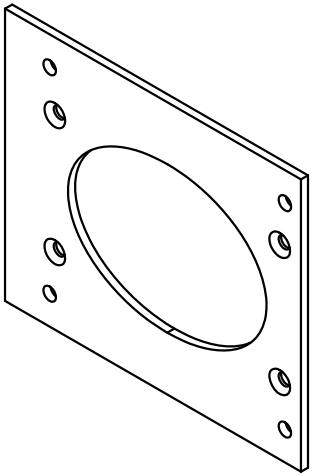

NOTE:

1. AVOID SHARP EDGES AND CORNERS
2. BURRS MUST BE REMOVED

SL NO	REF	DESCRIPTION	QTY
1	A	DRILL ∅3.2 ⌵ ∅5.8	4
2	B	∅3.5	4

REV	CN.NO.	DATE	DESCRIPTION	CHECKED	APPROVED	NEXT ASSEMBLY	ITEM	QTY
4								
3								
2								
1		21.08.19	REVISED					
0		11.08.17	ORIGINAL			DSA 36 109 0 011	8	2

MATERIAL	FINISH	PROJ.	TOL.GEN. ± / TOL.AXIS. ±	PRJ.
2 mm ALUMINIUM HE-32/5052	YELLOW CC COATING		IS: 2102 (MED.)	109

DRAWN	CHECKED	APPROVED	DIMNS	SCALE	TITLE
MALIKSAD			mm	NTS	SPEAKER PLATE
DATE 21.08.19	DATE	DATE	DRG. NUMBER		SIZE: A4 / ISSUE: 1

KERALA STATE ELECTRONICS DEVELOPMENT CORPORATION LIMITED

DPD 36 109 0 118

NO.OF SHEETS: 1 / 1

RESTRICTED

RESTRICTED

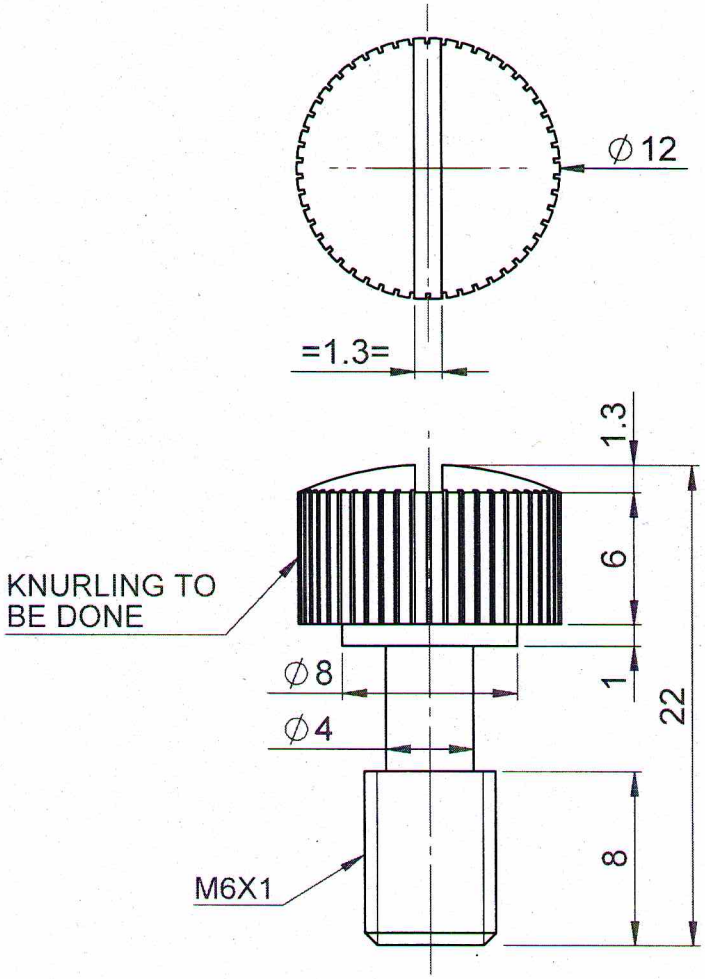

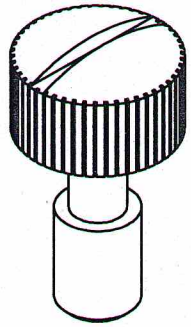

MASTER DOCUMENT

NOTE

1. AVOID SHARP CORNERS AND EDGES
2. BURRS MUST BE REMOVED

REV	CN.NO.	DATE	DESCRIPTION	CHECKED	APPROVED	NEXT ASSEMBLY	ITEM	QTY
4								
3								
2								
1								
0		23.11.16	ORIGINAL			DSA 36 109 0 022	5	2

MATERIAL: SS 316	FINISH: –	PROJ.	TOL.GEN. ± IS: 2102 TOL.AXIS. ± (MED.)	PRJ. 109	
DRAWN: THUSHANTH	CHECKED	APPROVED	DIMNS: mm	SCALE: NTS	TITLE: SS CAPTIVE SCREW
DATE: 23.11.16	DATE	DATE	DRG. NUMBER: DPD 36 109 0 133	SIZE: A4	ISSUE: 1
KERALA STATE ELECTRONICS DEVELOPMENT CORPORATION LIMITED				NO.OF SHEETS: 1 / 1	

RESTRICTED

RESTRICTED

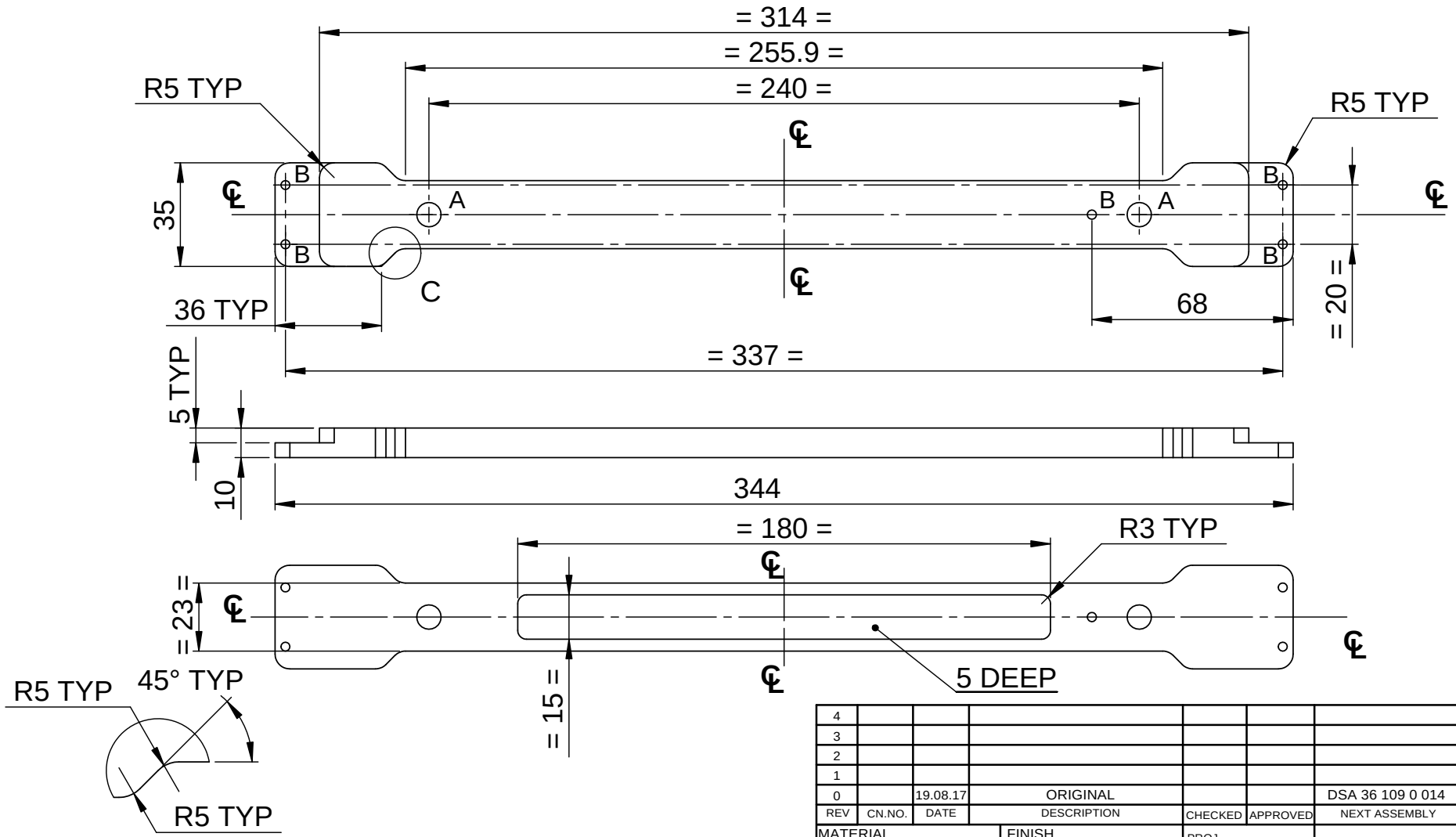

DETAIL C

SL NO	REF	DESCRIPTION	QTY
1	A	∅8.2	2
2	B	DRILL ∅3.1 AND M3 HELICOIL TAP	5

REV	CN.NO.	DATE	DESCRIPTION	CHECKED	APPROVED	NEXT ASSEMBLY	ITEM	QTY
4								
3								
2								
1								
0		19.08.17	ORIGINAL			DSA 36 109 0 014	4	2

MATERIAL: ALUMINIUM HE-30
FINISH: YELLOW CC COATING
PROJ.
TOL.GEN. ± IS: 2102
TOL.AXIS. ± (MED.)
PRJ. 109

DRAWN: MALIKSAD | CHECKED | APPROVED | DIMNS: mm | SCALE: NTS
TITLE: STIFFENER- SHOCK MOUNT
DATE 19.08.17 | DATE | DATE

KERALA STATE ELECTRONICS DEVELOPMENT CORPORATION LIMITED

DRG. NUMBER: DPD 36 109 0 130

SIZE: A4 | ISSUE: 1
NO.OF SHEETS: 1 / 1

RESTRICTED

RESTRICTED

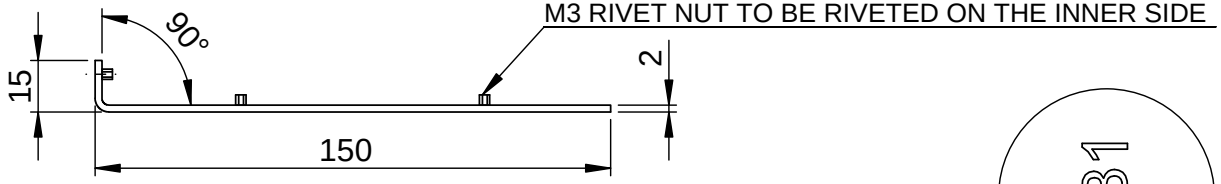

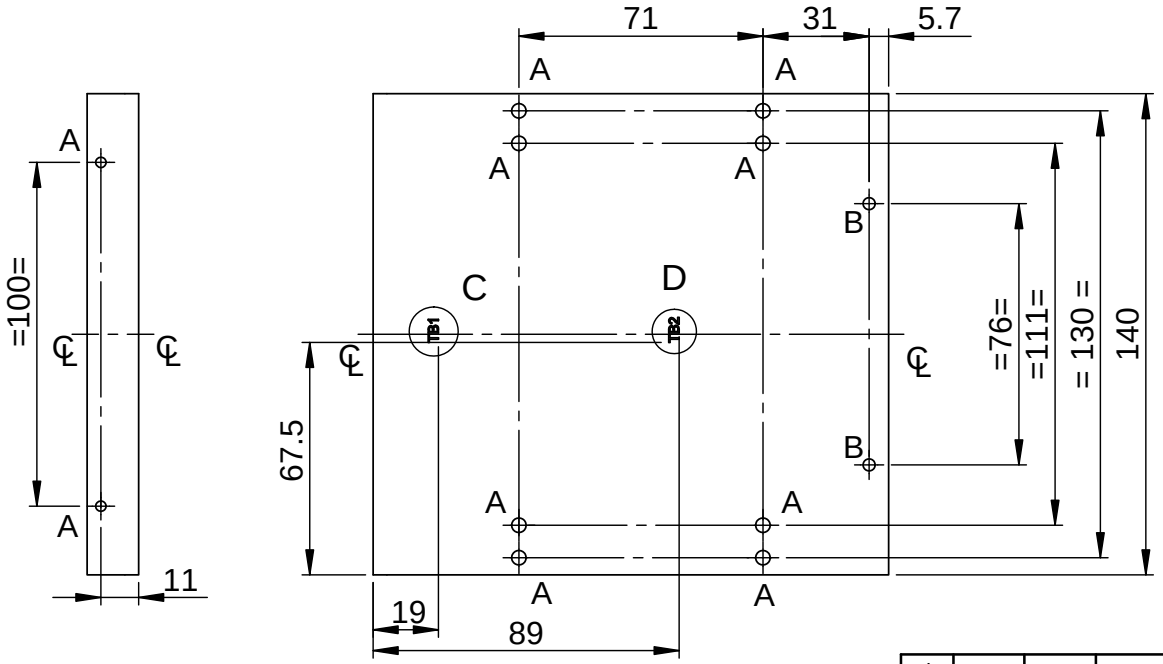

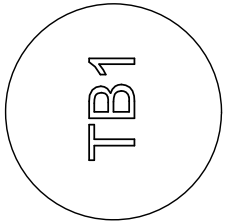

DETAIL C

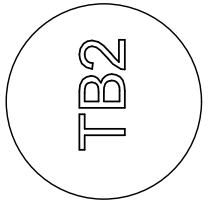

DETAIL D

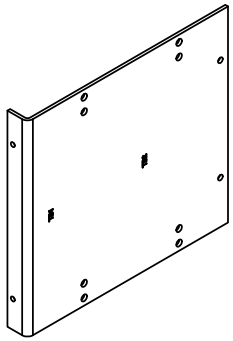

NOTE

1. AVOID SHARP CORNERS AND EDGES
2. 3x0.5⇩ TEXT TO BE ENGRAVED AND FILLED WITH BLACK PAINT

SL NO	REF	DESCRIPTION	QTY
1	A	M3 RIVET NUT	10
2	B	∅3.5	2

REV	CN.NO.	DATE	DESCRIPTION	CHECKED	APPROVED	NEXT ASSEMBLY	ITEM	QTY
4								
3								
2								
1								
0		03.12.17	ORIGINAL			DSA 36 109 0 017	4	1

MATERIAL: ALUMINIUM H32-5052	FINISH: YELLOW CC COATING	PROJ.	TOL.GEN. ± / TOL.AXIS. ± IS: 2102 (MED.)	PRJ. 109	
DRAWN: MALIKSAD	CHECKED	APPROVED	DIMNS: mm / SCALE: NTS	TITLE: TB MOUNTING PLATE	
DATE 03.12.17	DATE	DATE	DRG. NUMBER: DPD 36 109 0 084	SIZE: A4	ISSUE: 1
KERALA STATE ELECTRONICS DEVELOPMENT CORPORATION LIMITED				NO.OF SHEETS: 1 / 1	

RESTRICTED

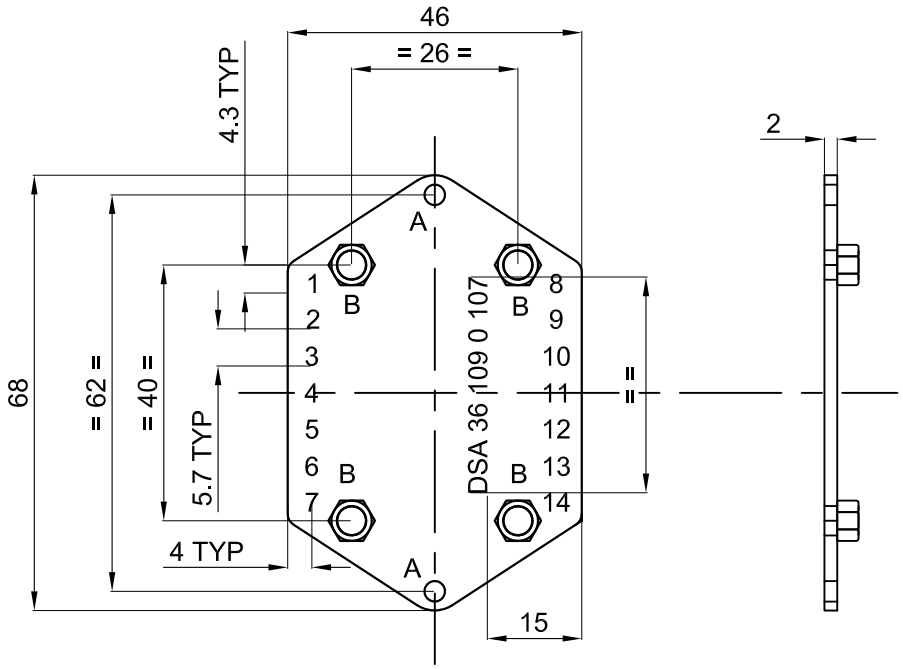

SL NO	REF	DESCRIPTION	QTY
1	A	Ø3.5	2
2	B	Ø4.6	4

NOTE

1. 3mm TEXT TO BE ENGRAVED AND FILL WITH WHITE COLOR PAINT
2. M3 RIVET NUT TO BE RIVETED ON HOLE 'B'

REV	CN.NO.	DATE	DESCRIPTION	CHECKED	APPROVED	NEXT ASSEMBLY	ITEM	QTY
4								
3								
2								
1								
0		26.08.16	ORIGINAL			DSA 36 109 0 107	5	1

MATERIAL	FINISH	PROJ.		PRJ.
2.5mm ALUMINUM SHEET	25 MICRON BLACK ANODIZING		TOL.GEN. ± IS:2102 TOL.AXIS. ± (MED)	109

DRAWN	CHECKED	APPROVED	DIMNS	SCALE	TITLE
MALIKSAD			mm	NTS	TRANSFORMER TOP PLATE
DATE 26.08.16	DATE	DATE			

KERALA STATE ELECTRONICS DEVELOPMENT CORPORATION LIMITED.

DRG. NUMBER: DPD 36 109 0 134

SIZE	ISSUE
A4	1
NO.OF SHEETS	1 / 1

RESTRICTED

RESTRICTED

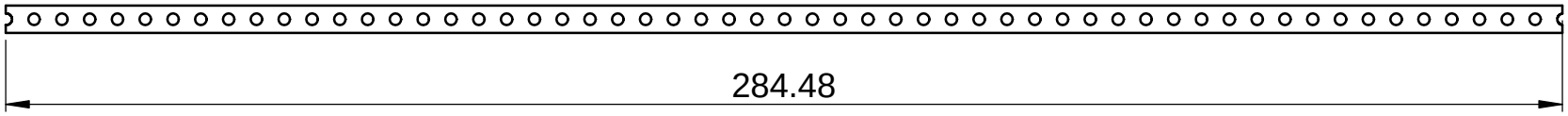

NOTE:

AVOID SHARP EDGES AND CORNERS

4								
3								
2								
1								
0		24.08.19	ORIGINAL			DSA 36 109 0 012	38	4
REV	CN.NO.	DATE	DESCRIPTION	CHECKED	APPROVED	NEXT ASSEMBLY	ITEM	QTY

MATERIAL STANDARD ITEM SCHROFF PART NO:34561-363	FINISH -	PROJ.	TOL.GEN. ± IS: 2102 TOL.AXIS. ± (MED.)	PRJ. 109		
DRAWN MALIKSAD	CHECKED	APPROVED	DIMNS mm	SCALE NTS	TITLE THREADED INSERT-BOTTOM CARD CAGE	
DATE 24.08.19	DATE	DATE	DRG. NUMBER DPD 36 109 0 233		SIZE A4	ISSUE 1
KERALA STATE ELECTRONICS DEVELOPMENT CORPORATION LIMITED					NO.OF SHEETS 1 / 1	

RESTRICTED

RESTRICTED

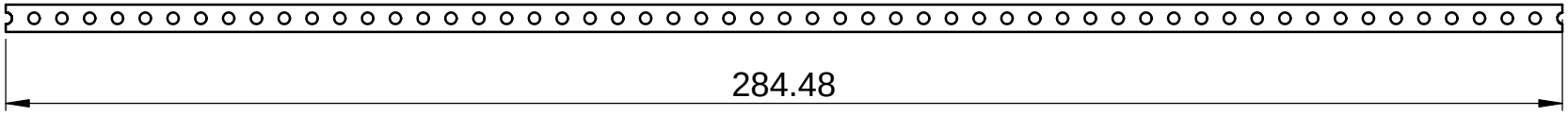

NOTE:

AVOID SHARP EDGES AND CORNERS

REV	CN.NO.	DATE	DESCRIPTION	CHECKED	APPROVED	NEXT ASSEMBLY	ITEM	QTY
4								
3								
2								
1								
0		24.08.19	ORIGINAL			DSA 36 109 0 013	33	4

MATERIAL: STANDARD ITEM SCHROFF PART NO:34561-363	FINISH: -	PROJ.	TOL.GEN. ± IS: 2102 TOL.AXIS. ± (MED.)	PRJ.	109
DRAWN: MALIKSAD	CHECKED	APPROVED	DIMNS: mm / SCALE: NTS	TITLE: THREADED INSERT-TOP CARD CAGE	
DATE 24.08.19	DATE	DATE	DRG. NUMBER: DPD 36 109 0 235	SIZE: A4	ISSUE: 1
KERALA STATE ELECTRONICS DEVELOPMENT CORPORATION LIMITED				NO.OF SHEETS: 1 / 1	

RESTRICTED

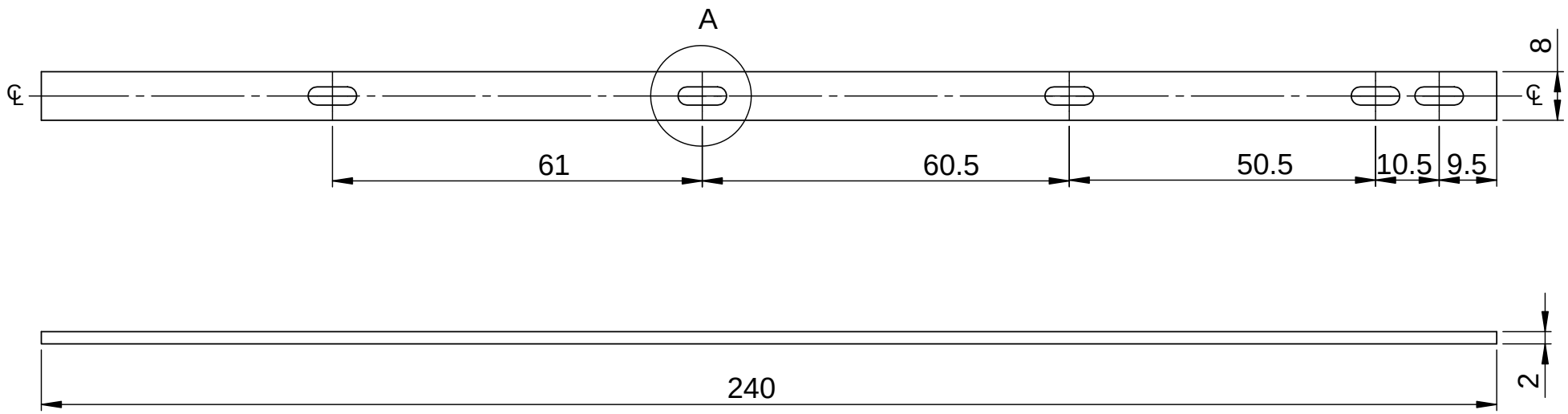

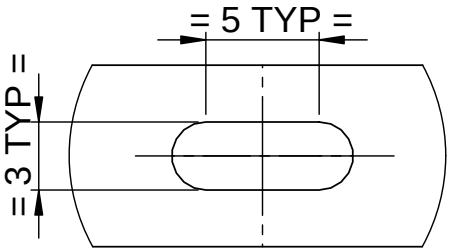

DETAIL A

REV	CN.NO.	DATE	DESCRIPTION	CHECKED	APPROVED	NEXT ASSEMBLY	ITEM	QTY
4								
3								
2								
1								
0		10.11.16	ORIGINAL					

MATERIAL: 2mm ALUMINIUM SHEET	FINISH: WHITE ANODISIND	PROJ.	TOL.GEN. ± IS: 2102 TOL.AXIS. ± (MED.)	PRJ. 109	
DRAWN: MALIKSAD	CHECKED	APPROVED	DIMNS: mm / SCALE: NTS	TITLE: TOP BACK PLAIN PCB SPACER STRIP	
DATE 10.11.16	DATE	DATE	DRG. NUMBER: DPD 36 109 0 223	SIZE: A4	ISSUE: 1
KERALA STATE ELECTRONICS DEVELOPMENT CORPORATION LIMITED				NO.OF SHEETS: 1 / 1	

RESTRICTED

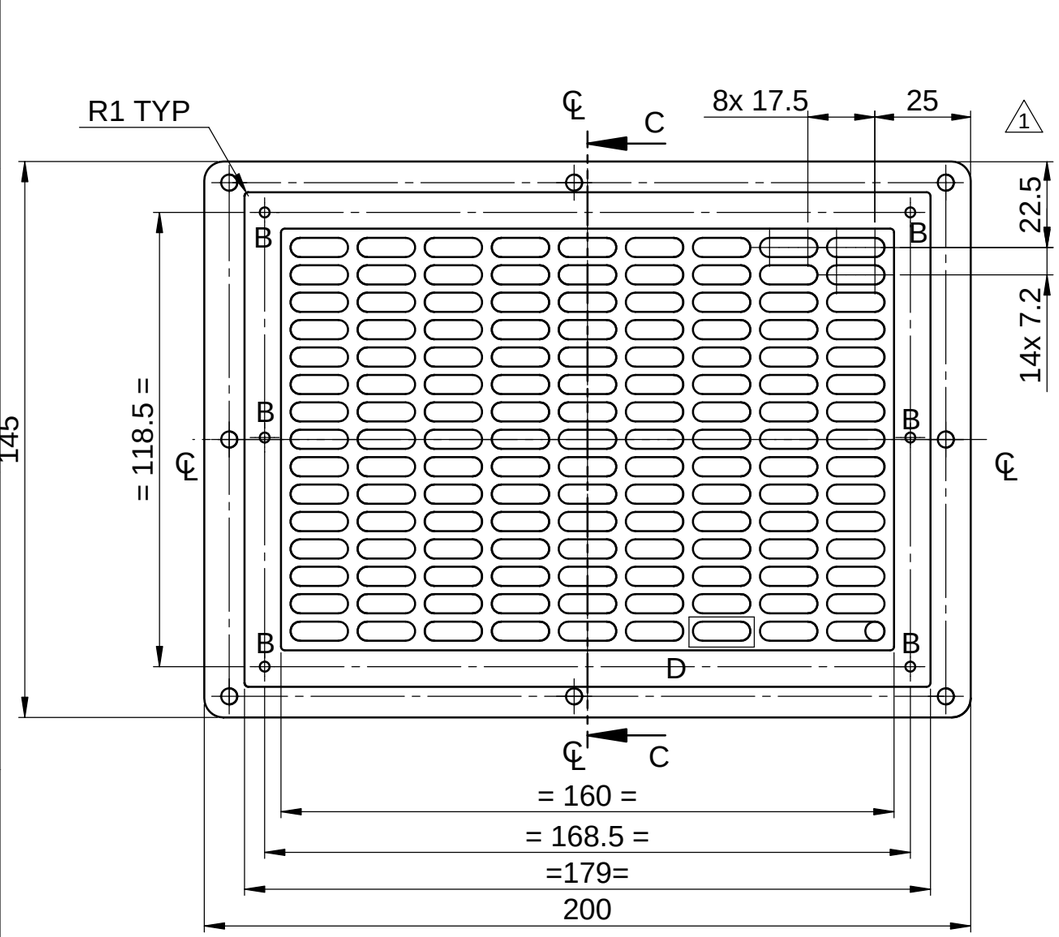

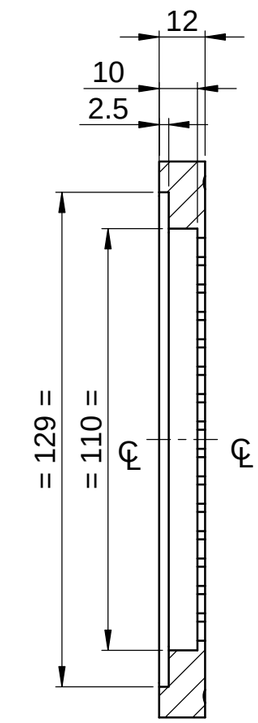

SECTION C-C

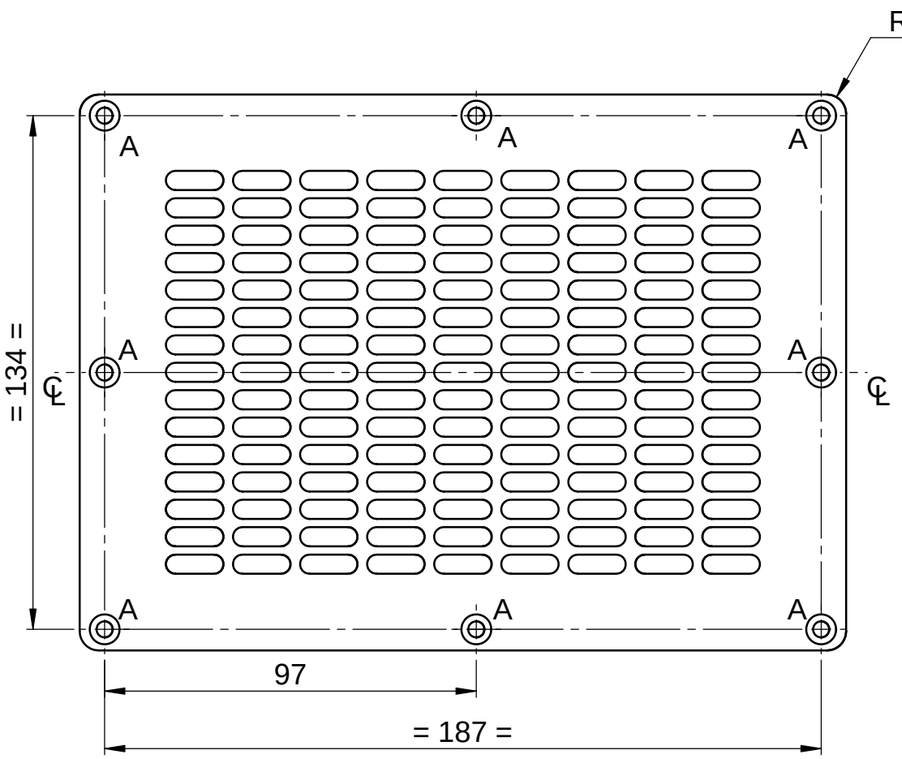

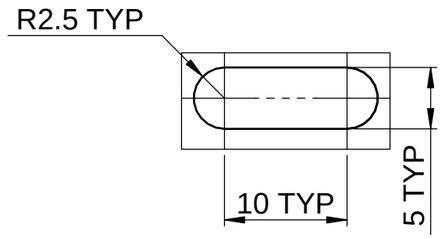

DETAIL D

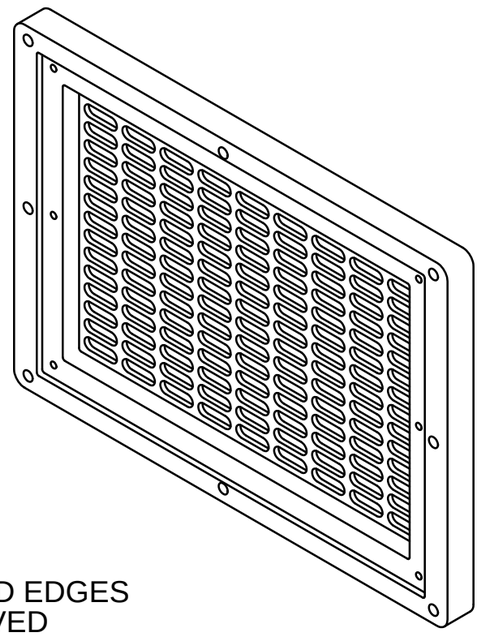

SL NO	REF	DESCRIPTION	QTY
1	A	∅4.2 ⌵ ∅7.8	8
2	B	DRILL ∅ 2.6x7 DEEP AND M2.5 HELICOIL TAP	6

REV	CN.NO.	DATE	DESCRIPTION	CHECKED	APPROVED	NEXT ASSEMBLY	ITEM	QTY
4								
3								
2								
1		22.08.19	ORIGINAL					
0		19.08.17	ORIGINAL			DSA 36 109 0 018	3	1

MATERIAL: ALUMINIUM HE-30	FINISH: YELLOW CC COATING	PROJ.	TOL.GEN. ± IS:2102 TOL.AXIS. ± (MED)	PRJ. 109	
DRAWN: MALIKSAD	CHECKED	APPROVED	DIMNS: mm	SCALE: NTS	TITLE: TOP BLOWER HOLDER
DATE 22.08.19	DATE	DATE	DRG. NUMBER: DPD 36 109 0 073	SIZE: A3	ISSUE: 1
KERALA STATE ELECTRONICS DEVELOPMENT CORPORATION LIMITED.				NO.OF SHEETS: 1 / 1	

NOTE

1. AVOID SHARP CORNERS AND EDGES
2. ALL BURRS MUST BE REMOVED

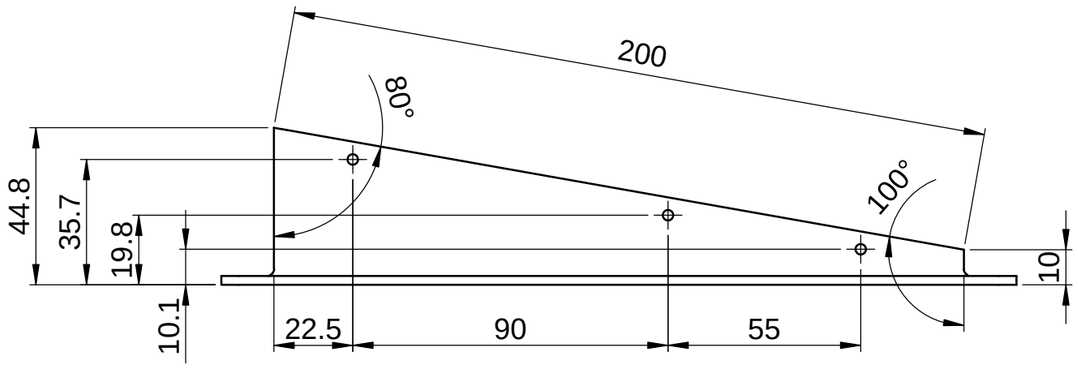

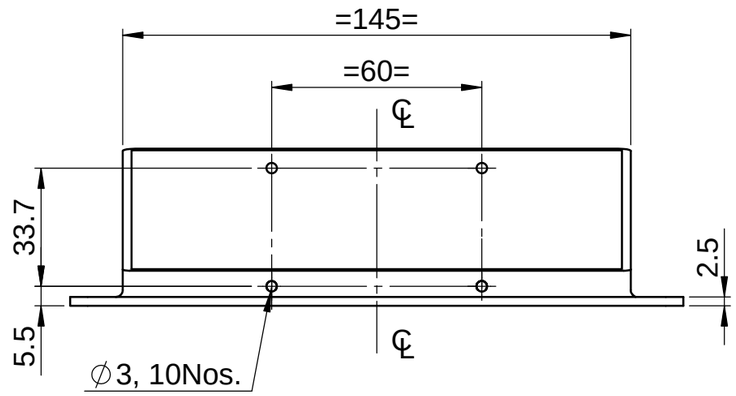

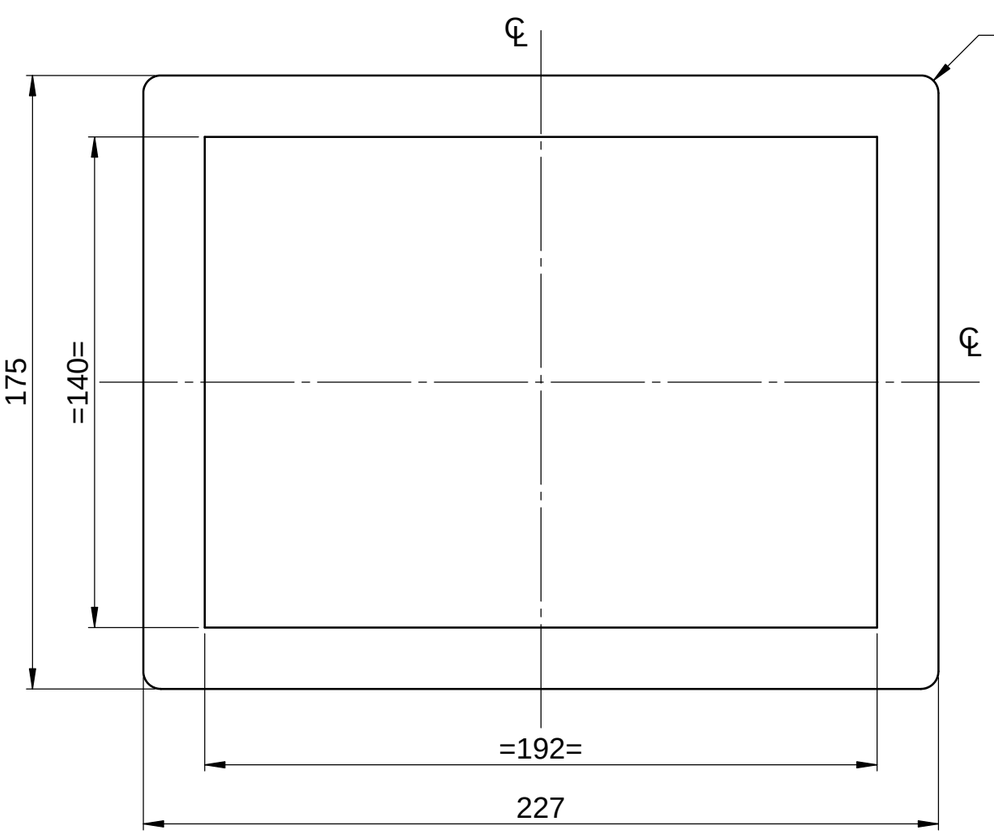

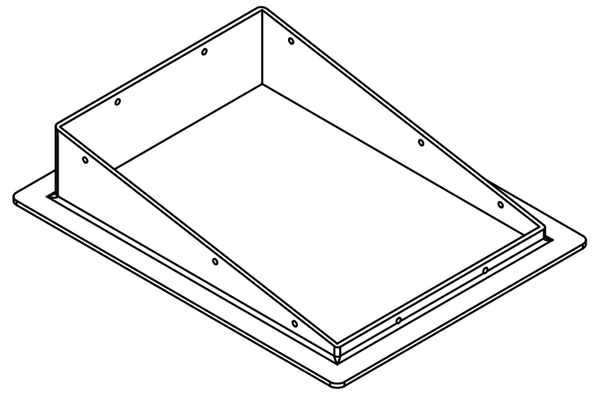

NOTE

1. AVOID SHARP CORNERS AND EDGES
2. ALL BURRS MUST BE REMOVED

REV	CN.NO.	DATE	DESCRIPTION	CHECKED	APPROVED	NEXT ASSEMBLY	ITEM	QTY
4								
3								
2								
1								
0		19.08.16	ORIGINAL			DSA 36 109 0 018	7	1

MATERIAL: 2.5 mm ALUMINIUM SHEET 5052-H32	FINISH: YELLOW CC COATING	PROJ.	TOL.GEN. ± IS:2102 TOL.AXIS. ± (MED)	PRJ. 109	
DRAWN: THUSHANTH	CHECKED	APPROVED	DIMNS: mm	SCALE: NTS	TITLE: TOP FAN COVER
DATE 19.08.16	DATE	DATE	DRG. NUMBER: DPD 36 109 0 080	SIZE: A3	ISSUE: 1
KERALA STATE ELECTRONICS DEVELOPMENT CORPORATION LIMITED.				NO.OF SHEETS: 1 / 1	

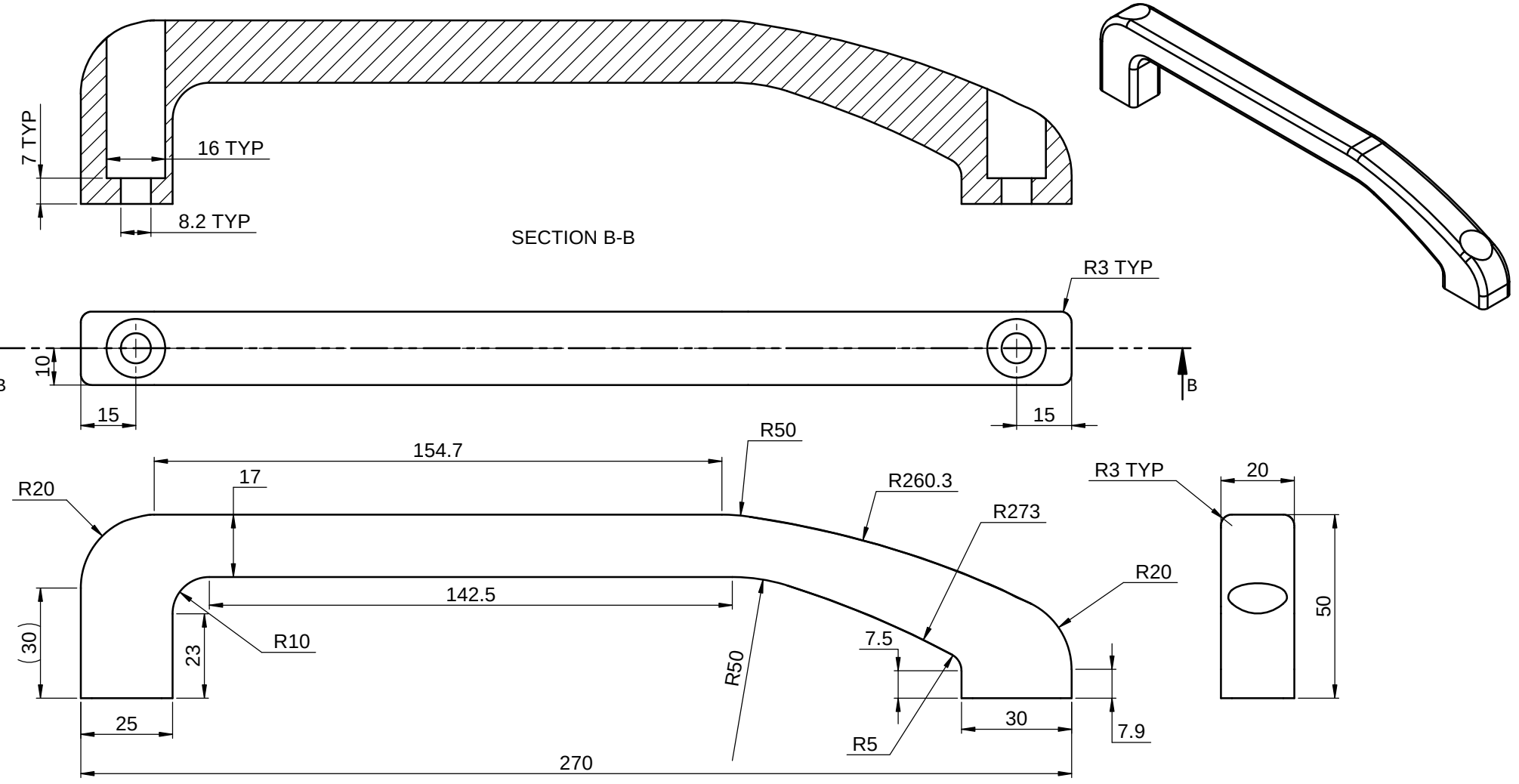

NOTE

1. AVOID SHARP CORNERS AND EDGES
2. ALL BURRS MUST BE REMOVED
3. DIMENSIONLESS FEATURES TO AS PER IGS FILE

REV	CN.NO.	DATE	DESCRIPTION	CHECKED	APPROVED	NEXT ASSEMBLY	ITEM	QTY
4								
3								
2								
1								
0		19.08.16	ORIGINAL			DSA 36 109 0 018	2	2

MATERIAL: ALUMINIUM HE-30	FINISH: YELLOW CC COATING	PROJ.	TOL.GEN. ± IS:2102 TOL.AXIS. ± (MED)	PRJ. 109	
DRAWN: THUSHANTH	CHECKED	APPROVED	DIMNS: mm	SCALE: NTS	TITLE: TOP HANDLE
DATE 19.08.16	DATE	DATE	DRG. NUMBER: DPD 36 109 0 076	SIZE: A3	ISSUE: 1
KERALA STATE ELECTRONICS DEVELOPMENT CORPORATION LIMITED				NO.OF SHEETS: 1 / 1	

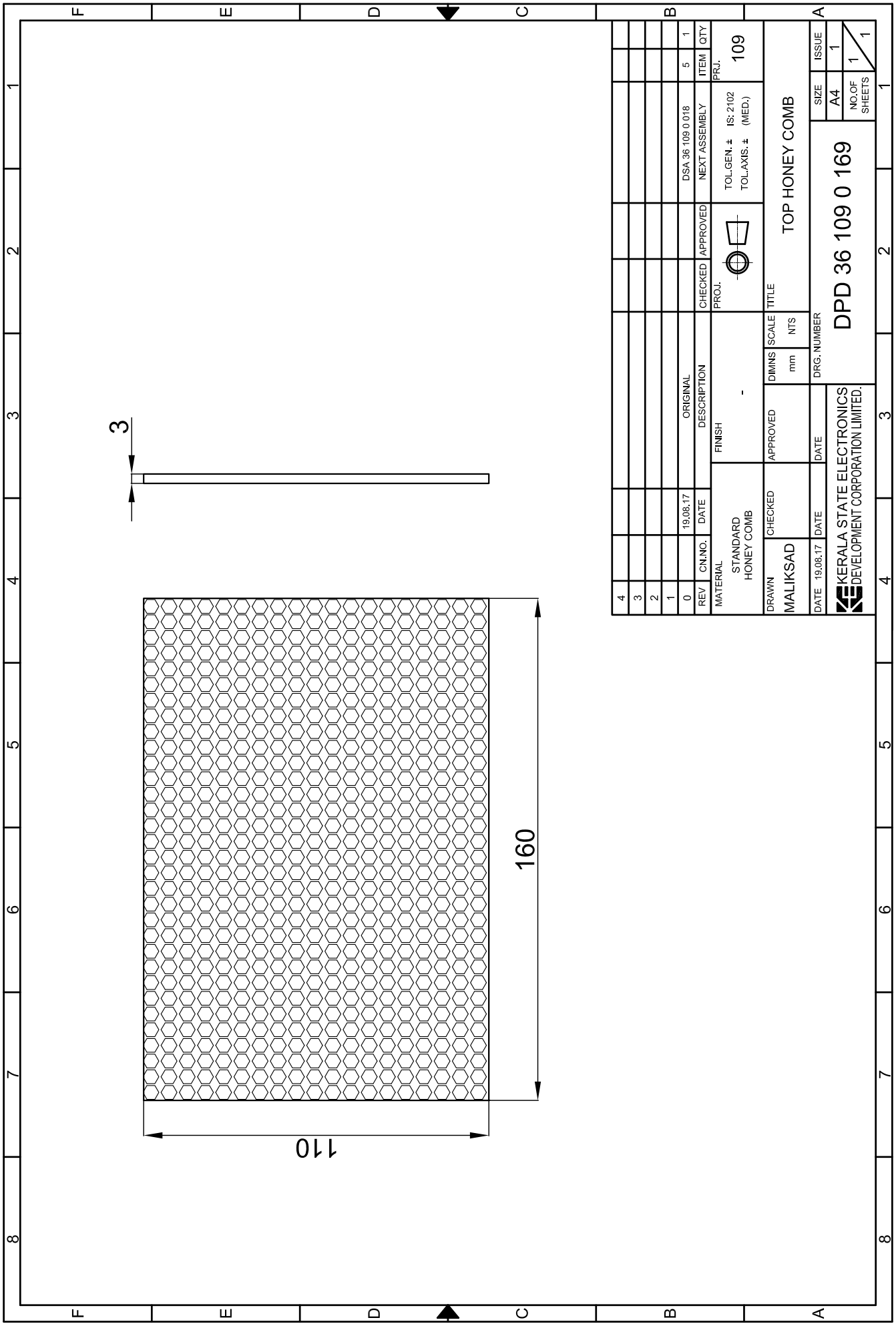
3
160
110
4
3
2
1
0
REV
CN.NO.
DATE
19.08.17
ORIGINAL
DESCRIPTION
CHECKED
APPROVED
DSA 36 109 0 018
NEXT ASSEMBLY
ITEM
5
QTY
1
PRJ.
109
TOL.GEN. ± IS: 2102
TOL.AXIS. ± (MED.)
PROJ.
MATERIAL
STANDARD
HONEY COMB
FINISH
-
DRAWN
MALIKSAD
DATE 19.08.17
CHECKED
DATE
APPROVED
DATE
DIMNS
mm
SCALE
NTS
TITLE
TOP HONEY COMB
DRG. NUMBER
DPD 36 109 0 169
KERALA STATE ELECTRONICS
DEVELOPMENT CORPORATION LIMITED.
SIZE
A4
ISSUE
1
NO.OF SHEETS
1
1

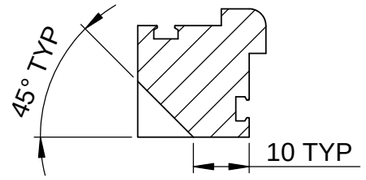

SECTION D-D

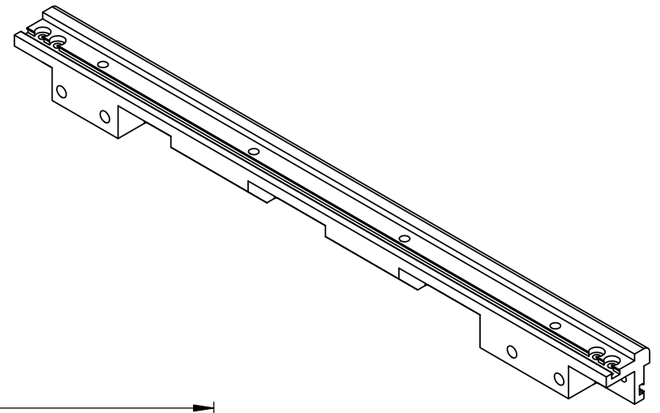

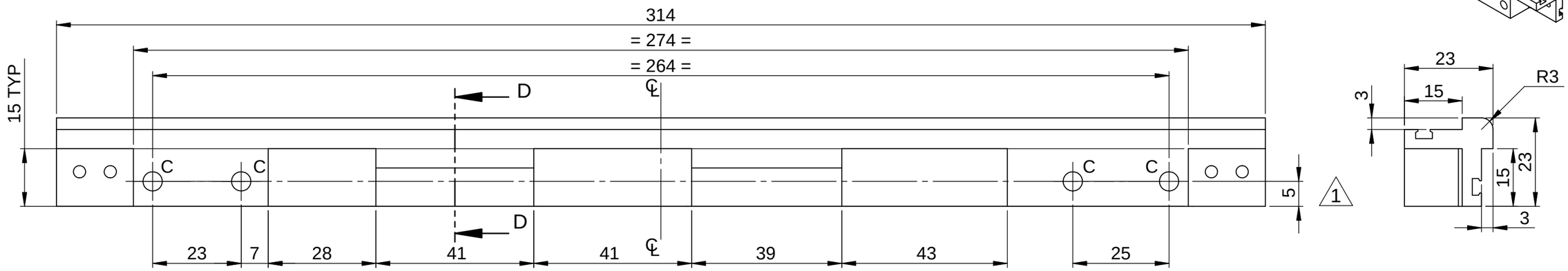

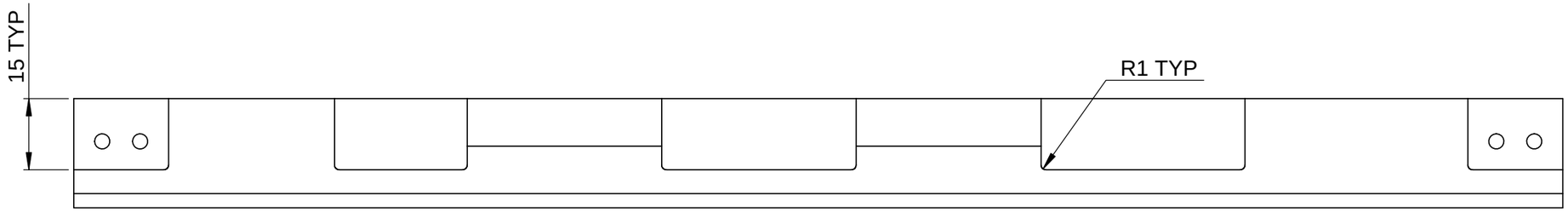

NOTE

1. AVOID SHARP CORNERS AND EDGES
2. ALL BURRS MUST BE REMOVED

SL NO	REF	DESCRIPTION	QTY
1	A	DRILL ∅3.2 ⌴ ∅6.2, ↧ 2.4	8
2	B	DRILL ∅4.1, ↧ 5 AND M4 HELICOIL TAP	7
3	C	DRILL ∅5.2, ↧15 AND M5 HELICOIL TAP	4

REV	CN.NO.	DATE	DESCRIPTION	CHECKED	APPROVED	NEXT ASSEMBLY	ITEM	QTY
4								
3								
2								
1		22.08.19	REVISED					
0		19.08.17	ORIGINAL			DSA 36 109 0 020	19	01

MATERIAL: ALUMINIUM HE-30	FINISH: YELLOW CC COATING	PROJ.	TOL.GEN. ± IS:2102 TOL.AXIS. ± (MED)	PRJ. 109	
DRAWN: MALIKSAD	CHECKED	APPROVED	DIMNS: mm	SCALE: NTS	TITLE: TOP LEFT DEPTH FRAME
DATE 22.08.19	DATE	DATE	DRG. NUMBER: DPD 36 109 0 105	SIZE: A3	ISSUE: 1
KERALA STATE ELECTRONICS DEVELOPMENT CORPORATION LIMITED.				NO.OF SHEETS: 1/2	

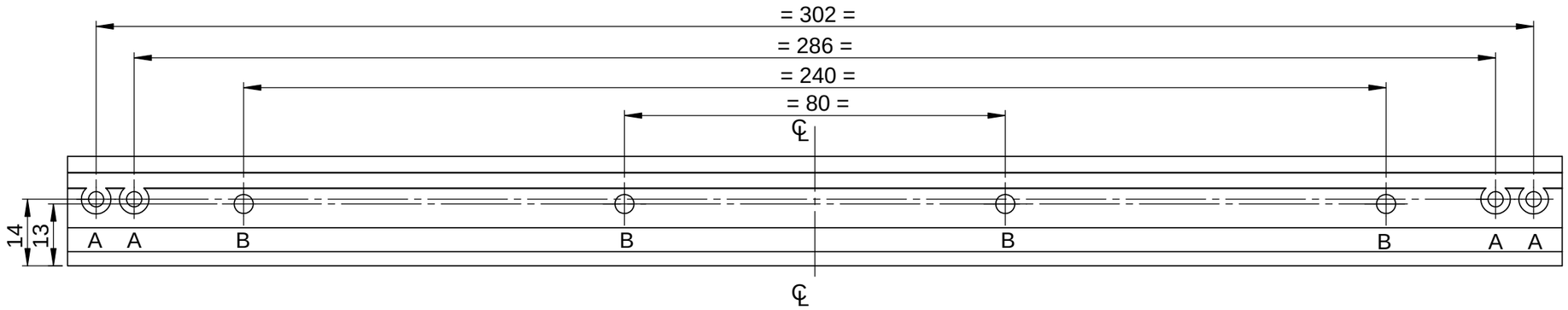

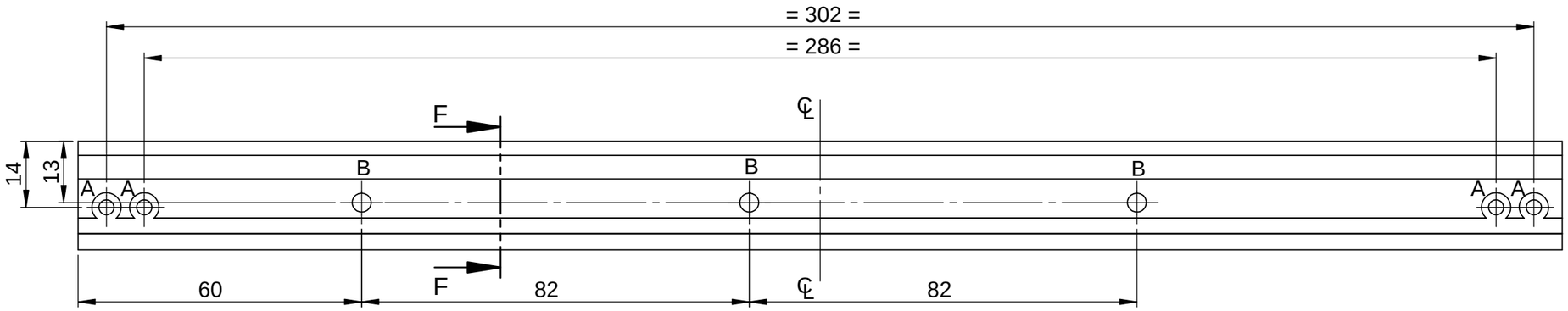

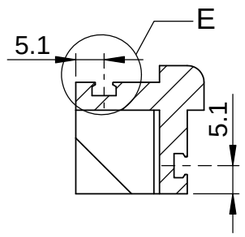

SECTION F-F

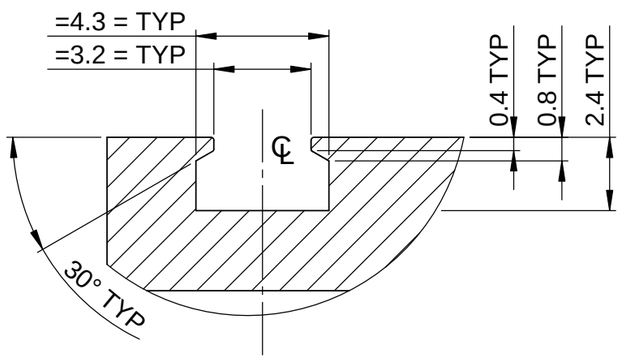

DETAIL E

REV	CN.NO.	DATE	DESCRIPTION	CHECKED	APPROVED	NEXT ASSEMBLY	ITEM	QTY
4								
3								
2								
1		22.08.19	REVISED					
0		19.08.17	ORIGINAL			DSA 36 109 0 020	19	01

MATERIAL	FINISH	PROJ.		PRJ.
ALUMINIUM HE-30	YELLOW CC COATING		TOL.GEN. ± IS:2102 TOL.AXIS. ± (MED)	109

DRAWN	CHECKED	APPROVED	DIMNS	SCALE	TITLE
MALIKSAD			mm	NTS	TOP LEFT DEPTH FRAME
DATE 22.08.19	DATE	DATE			

KERALA STATE ELECTRONICS DEVELOPMENT CORPORATION LIMITED

DRG. NUMBER: DPD 36 109 0 105

SIZE	ISSUE
A3	1
NO.OF SHEETS	2 / 2

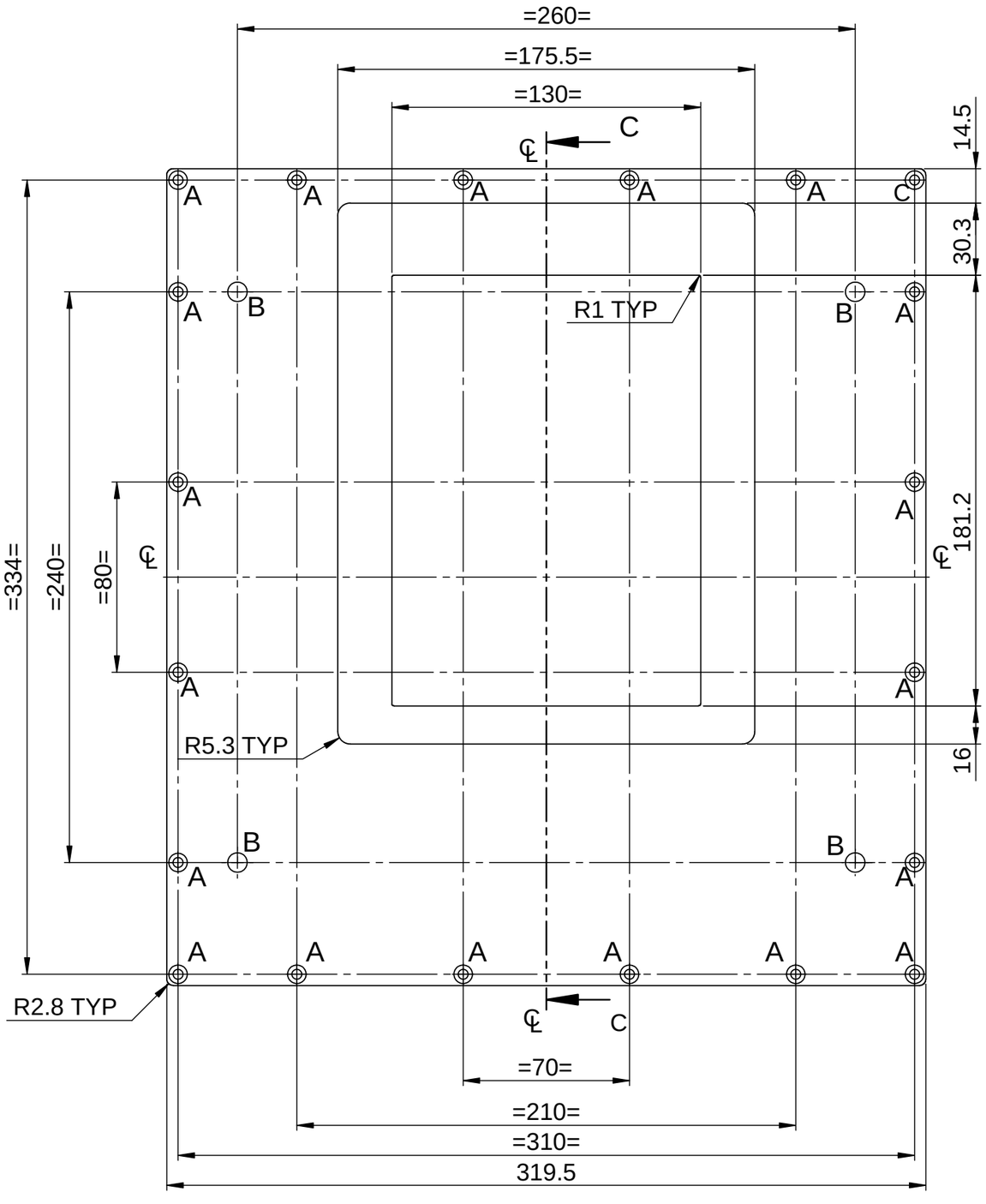

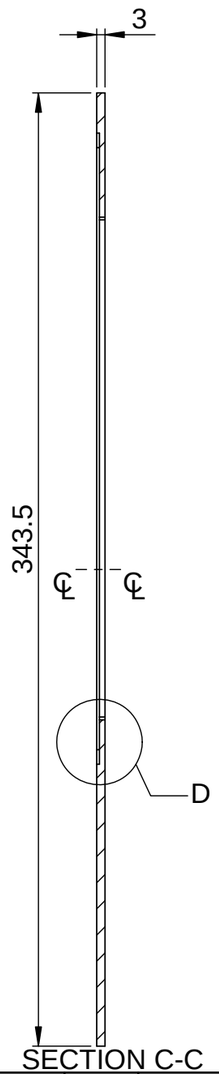

SECTION C-C

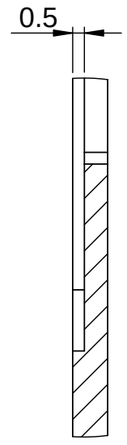

DETAIL D

SL NO	REF	DESCRIPTION	QTY
1	A	⌀4.2 ⌵ ⌀7.8	20
2	B	⌀8.2	4

REV	CN.NO.	DATE	DESCRIPTION	CHECKED	APPROVED	NEXT ASSEMBLY	ITEM	QTY
4								
3								
2								
1								
0		13.08.17	ORIGINAL			DSA 36 109 0 018	8	1

MATERIAL	FINISH	PROJ.		PRJ.
ALUMINIUM HE-30	YELLOW CC COATING		TOL.GEN. ± IS:2102 TOL.AXIS. ± (MED)	109

DRAWN	CHECKED	APPROVED	DIMNS	SCALE	TITLE
MALIKSAD			mm	NTS	TOP PLATE

DATE	DATE	DATE	DRG. NUMBER	SIZE	ISSUE
13.08.17			DPD 36 109 0 081	A3	1

KERALA STATE ELECTRONICS DEVELOPMENT CORPORATION LIMITED.

NO.OF SHEETS 1 / 2

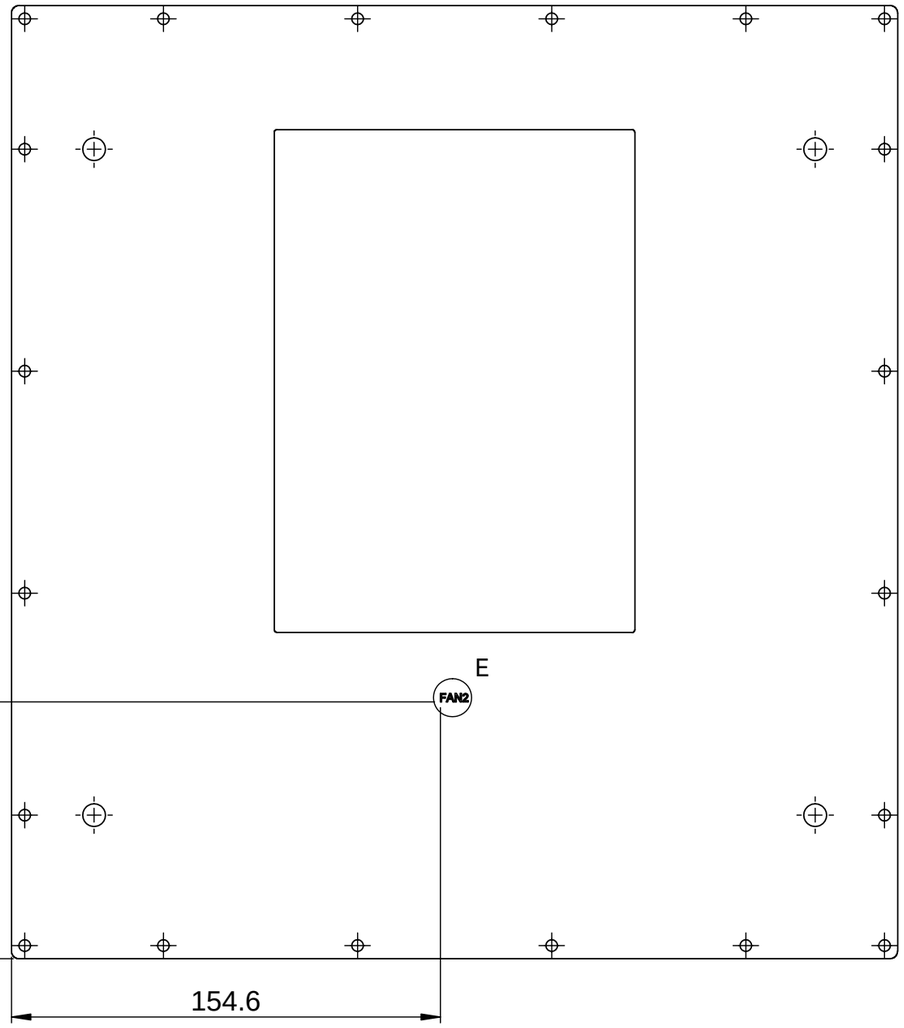

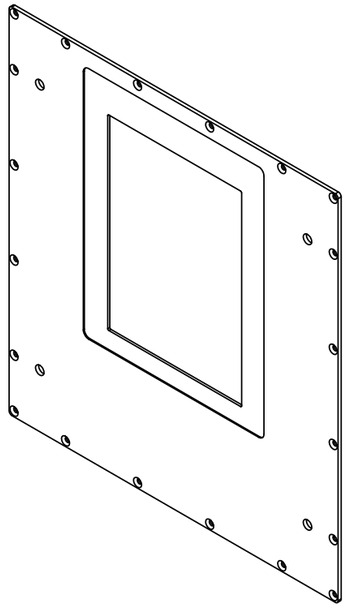

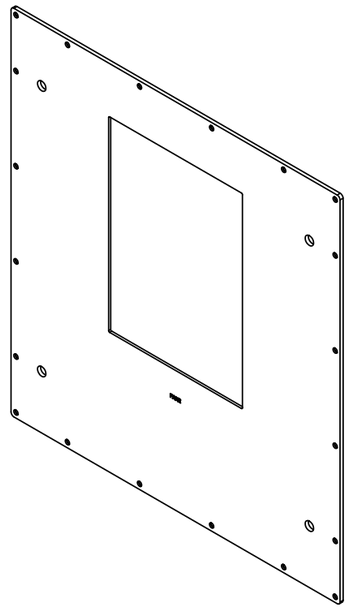

DETAIL E

NOTE

1. AVOID SHARP CORNERS AND EDGES
2. 3x0.5↧ TEXT TO BE ENGRAVED AND FILLED WITH BLACK PAINT

REV	CN.NO.	DATE	DESCRIPTION	CHECKED	APPROVED	NEXT ASSEMBLY	ITEM	QTY
4								
3								
2								
1								
0		13.08.19	ORIGINAL			DSA 36 109 0 018	8	1

MATERIAL: ALUMINIUM HE-30	FINISH: YELLOW CC COATING	PROJ.	TOL.GEN. ± IS:2102 TOL.AXIS. ± (MED)	PRJ. 109	
DRAWN: MALIKSAD	CHECKED	APPROVED	DIMNS: mm / SCALE: NTS	TITLE: TOP PLATE	
DATE 13.08.17	DATE	DATE	DRG. NUMBER: DPD 36 109 0 081	SIZE: A3	ISSUE: 1
KERALA STATE ELECTRONICS DEVELOPMENT CORPORATION LIMITED.				NO.OF SHEETS: 2 / 2	

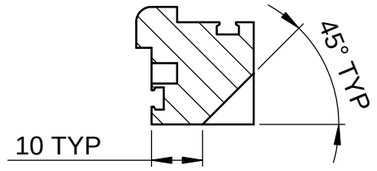

SECTION D-D

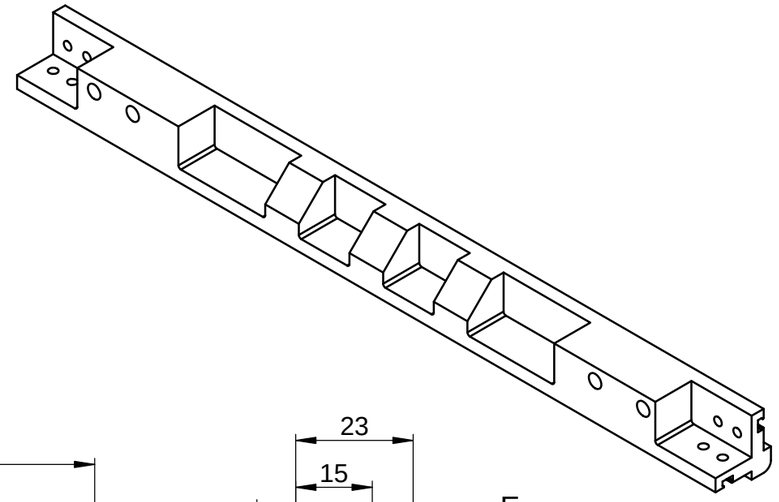

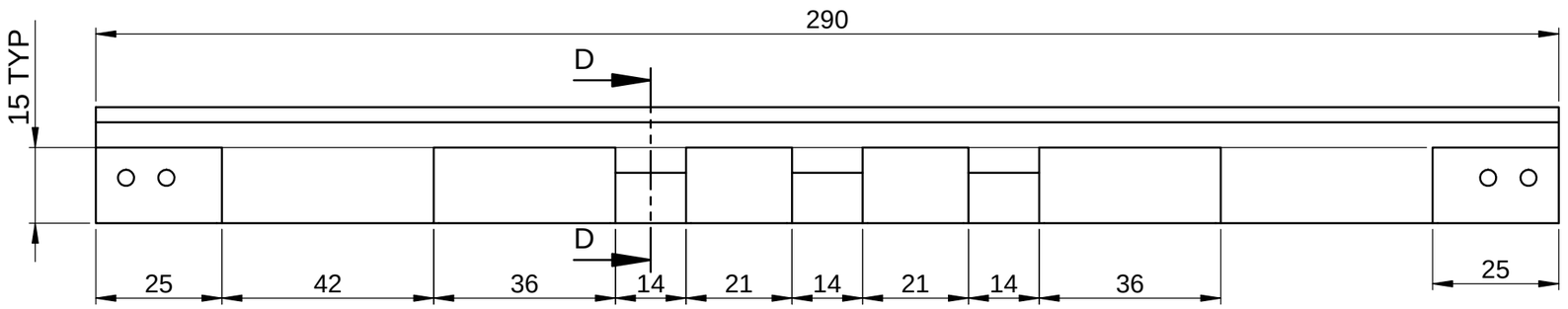

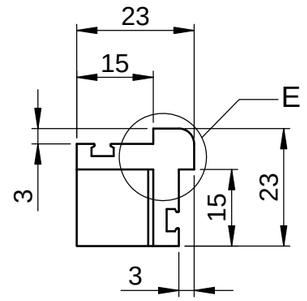

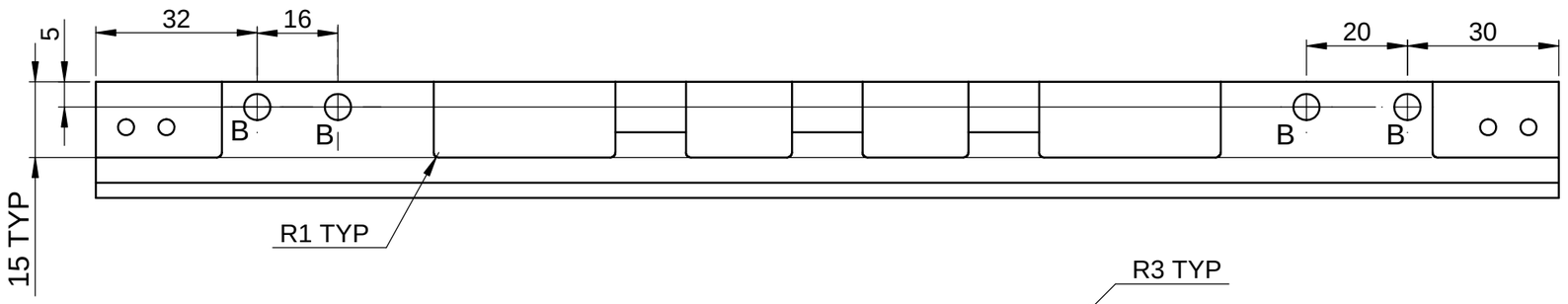

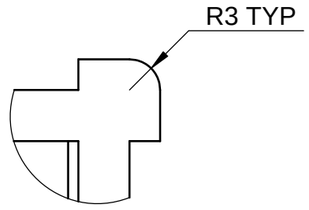

DETAIL E

NOTE

1. AVOID SHARP CORNERS AND EDGES
2. ALL BURRS MUST BE REMOVED

SL NO	REF	DESCRIPTION	QTY
1	A	DRILL ∅3.2 ⌴ ∅6.2↧2.4	8
2	B	DRILL ∅5.2, ↧15 AND M5 HELICOIL TAP	4
3	C	DRILL ∅4.2, ↧5 AND M4 HELICOIL TAP	7

REV	CN.NO.	DATE	DESCRIPTION	CHECKED	APPROVED	NEXT ASSEMBLY	ITEM	QTY
4								
3								
2								
1								
0		19.08.17	ORIGINAL			DSA 36 109 0 020	6	1

MATERIAL: ALUMINIUM HE-30	FINISH: YELOW CC COATING	PROJ.	TOL.GEN. ± IS:2102 TOL.AXIS. ± (MED)	PRJ. 109	
DRAWN: MALIKSAD	CHECKED	APPROVED	DIMNS: mm	SCALE: NTS	TITLE: TOP REAR HT FRAME
DATE 19.08.17	DATE	DATE	DRG. NUMBER: DPD 36 109 0 092	SIZE: A3	ISSUE: 1
KERALA STATE ELECTRONICS DEVELOPMENT CORPORATION LIMITED				NO.OF SHEETS: 1/2	

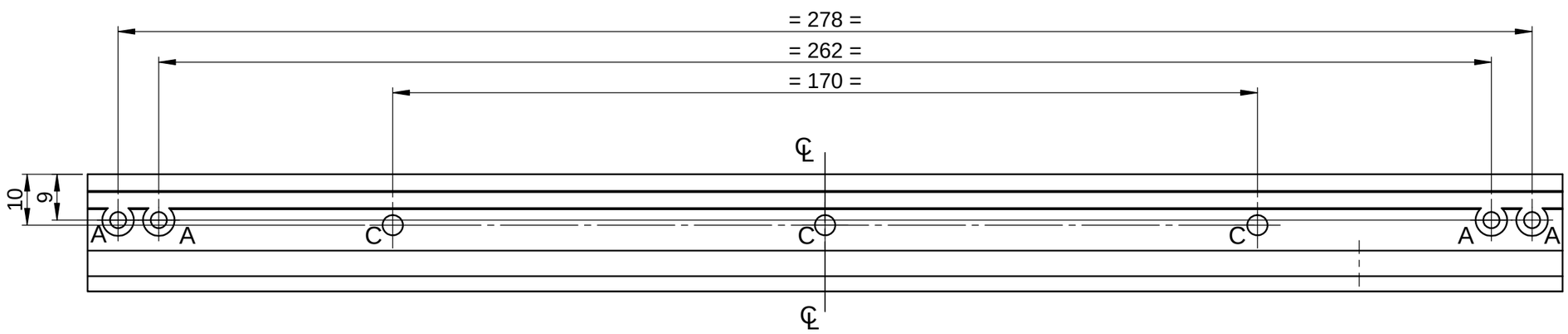

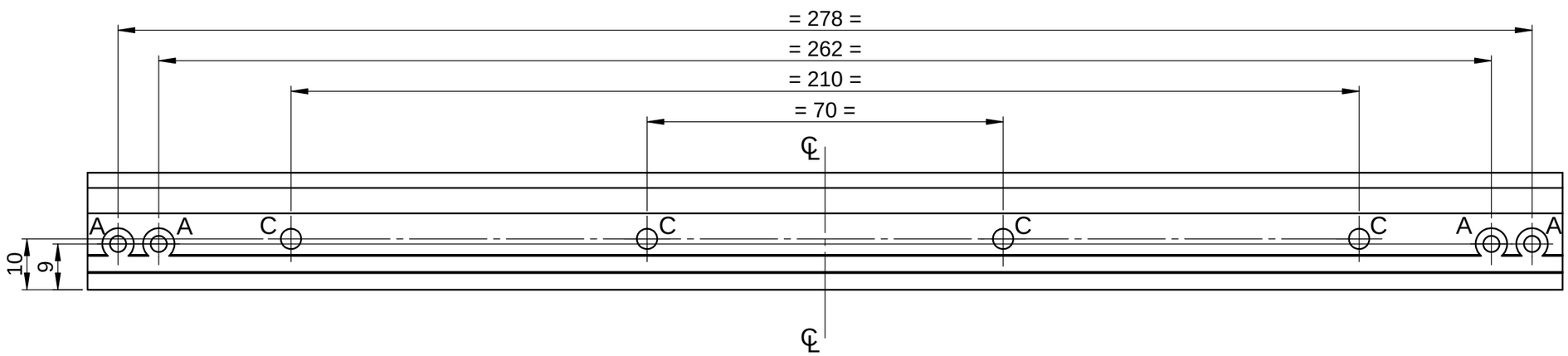

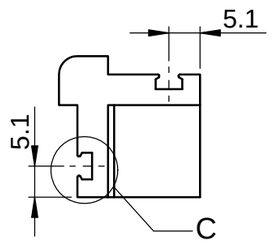

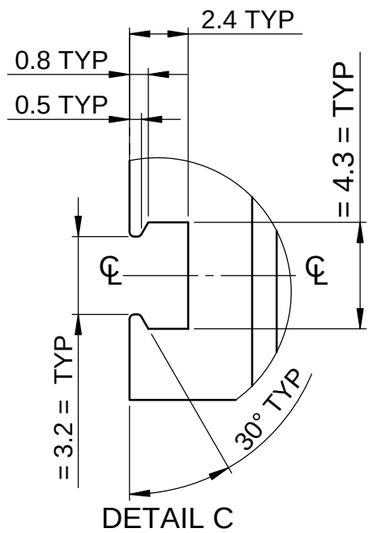

DETAIL C

REV	CN.NO.	DATE	DESCRIPTION	CHECKED	APPROVED	NEXT ASSEMBLY	ITEM	QTY
4								
3								
2								
1								
0		19.08.17	ORIGINAL			DSA 36 109 0 020	6	1

MATERIAL: ALUMINIUM HE-30	FINISH: YELLOW CC COATING	PROJ.	TOL.GEN. ± IS:2102 TOL.AXIS. ± (MED)	PRJ. 109	
DRAWN: MALIKSAD	CHECKED	APPROVED	DIMNS: mm	SCALE: NTS	TITLE: TOP REAR HT FRAME
DATE 19.08.17	DATE	DATE			

KERALA STATE ELECTRONICS DEVELOPMENT CORPORATION LIMITED.

DRG. NUMBER: DPD 36 109 0 092

SIZE	ISSUE
A3	1
NO.OF SHEETS	2 / 2

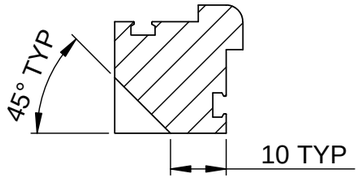

SECTION D-D

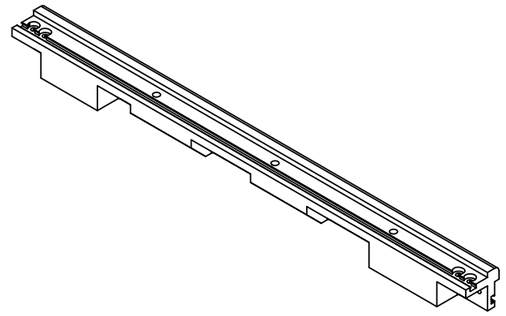

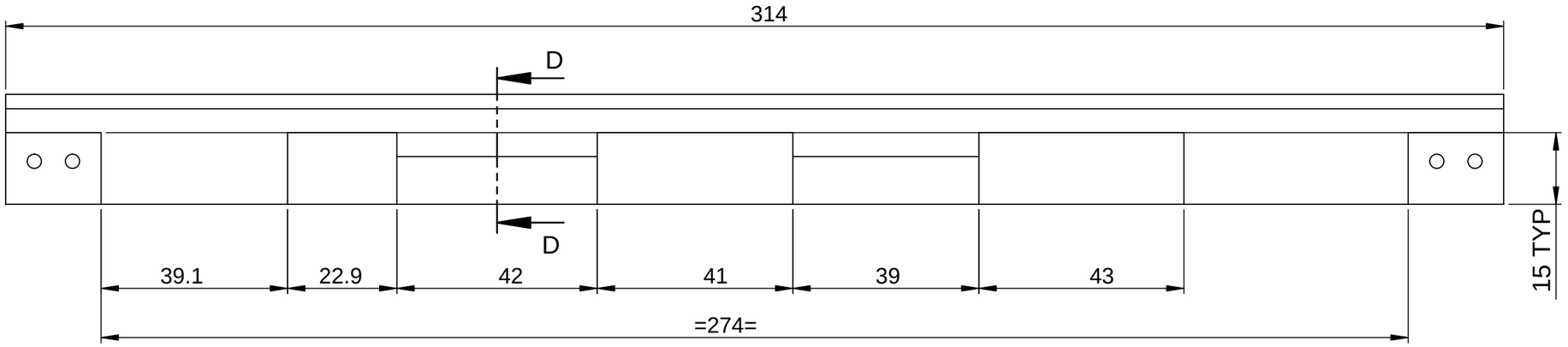

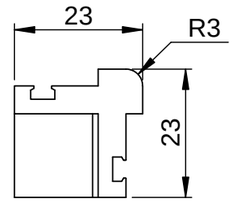

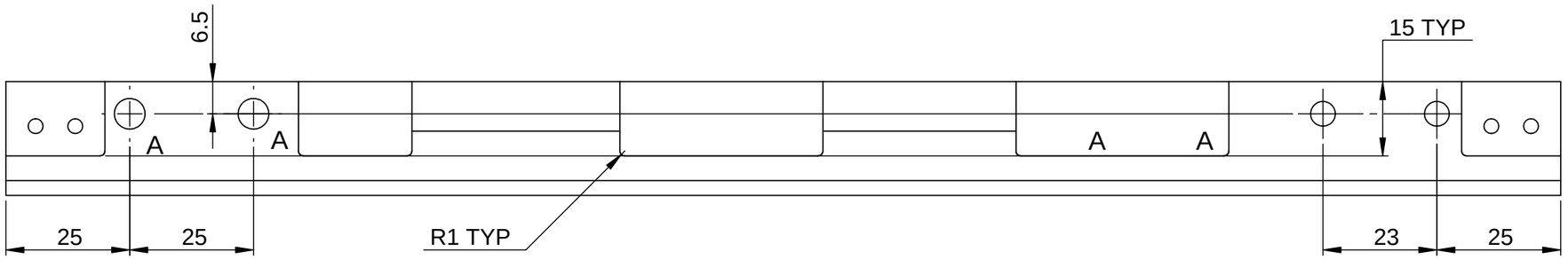

NOTE

1. AVOID SHARP CORNERS AND EDGES
2. ALL BURRS MUST BE REMOVED

SL NO	REF	DESCRIPTION	QTY
1	A	DRILL ⌀5.2, ↧15 AND M5 HELICOIL	4
2	B	DRILL ⌀3.2⌴ ⌀6.2↧2.4	8
3	C	DRILL ⌀4.1, ↧5 AND M4 HELICOIL	7

REV	CN.NO.	DATE	DESCRIPTION	CHECKED	APPROVED	NEXT ASSEMBLY	ITEM	QTY
4								
3								
2								
1								
0		19.08.17	ORIGINAL			DSA 36 109 0 020	5	1

MATERIAL: ALUMINIUM HE-30	FINISH: YELLOW CC COATING	PROJ.	TOL.GEN. ± IS:2102 TOL.AXIS. ± (MED)	PRJ. 109	
DRAWN: MALIKSAD	CHECKED	APPROVED	DIMNS: mm	SCALE: NTS	TITLE: TOP RIGHT DEPTH FRAME
DATE 19.08.17	DATE	DATE	DRG. NUMBER: DPD 36 109 0 091	SIZE: A3	ISSUE: 1
KERALA STATE ELECTRONICS DEVELOPMENT CORPORATION LIMITED.				NO.OF SHEETS: 1/2	

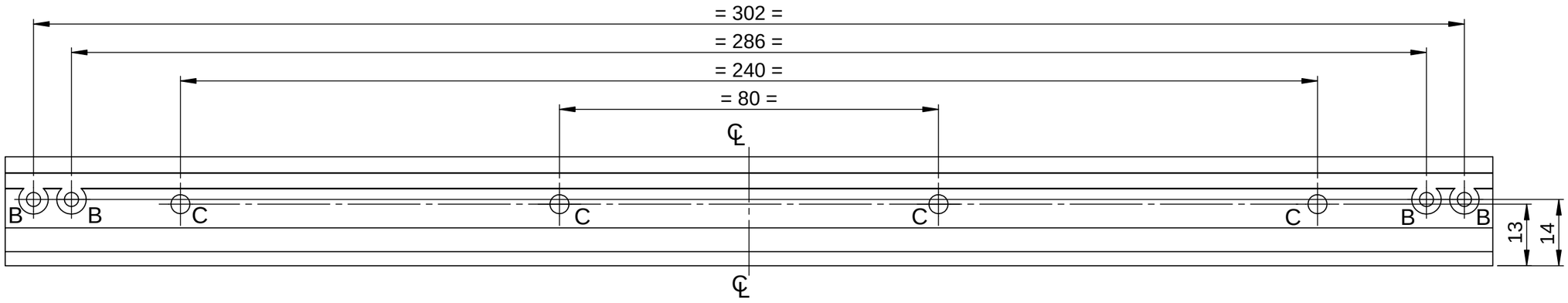

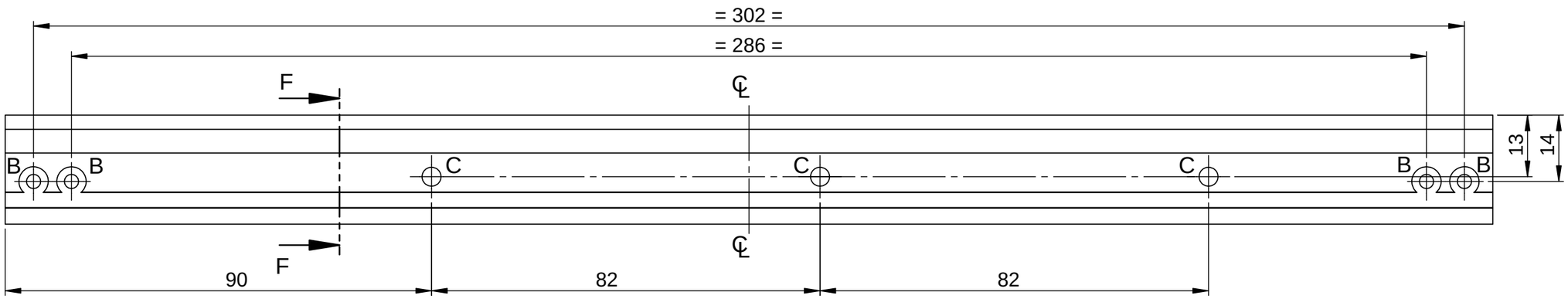

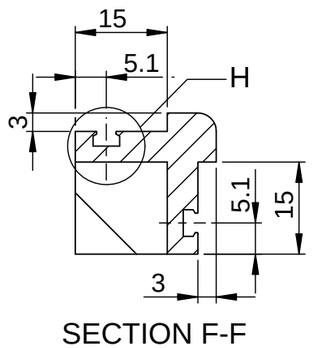

SECTION F-F

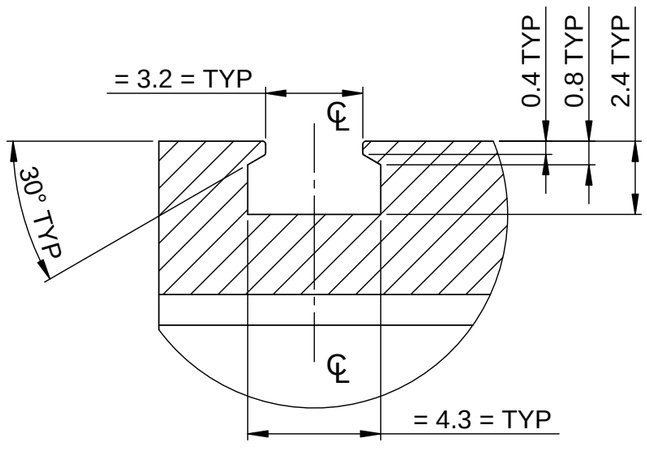

DETAIL H

REV	CN.NO.	DATE	DESCRIPTION	CHECKED	APPROVED	NEXT ASSEMBLY	ITEM	QTY
4								
3								
2								
1								
0		19.08.17	ORIGINAL			DSA 36 109 0 020	5	1

MATERIAL: ALUMINIUM HE-30	FINISH: YELLOW CC COATING	PROJ.	TOL.GEN. ± IS:2102 TOL.AXIS. ± (MED)	PRJ. 109	
DRAWN: MALIKSAD	CHECKED	APPROVED	DIMNS: mm / SCALE: NTS	TITLE: TOP RIGHT DEPTH FRAME	
DATE 19.08.17	DATE	DATE	DRG. NUMBER: DPD 36 109 0 091	SIZE: A3	ISSUE: 1
KERALA STATE ELECTRONICS DEVELOPMENT CORPORATION LIMITED.				NO.OF SHEETS: 2 / 2	

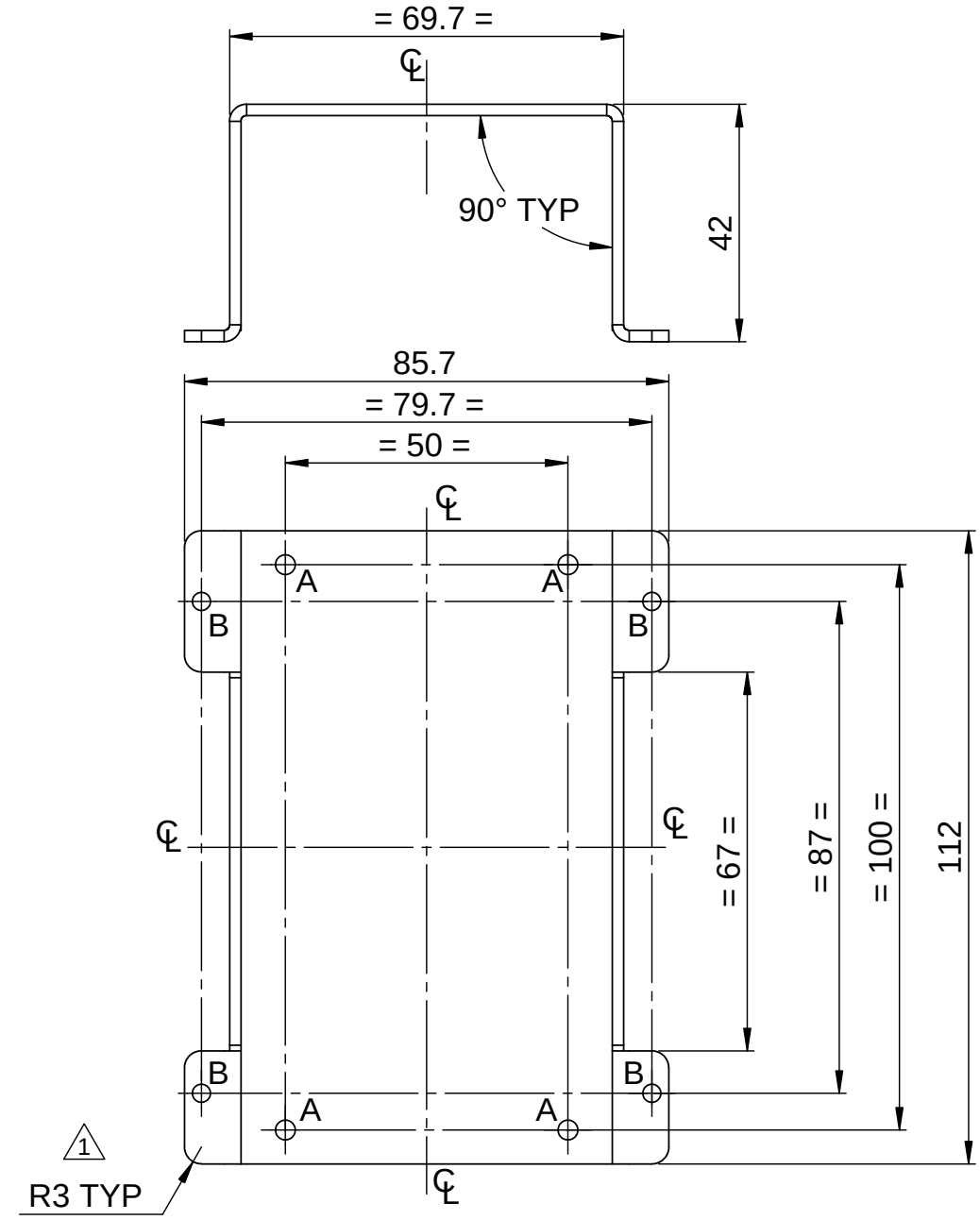

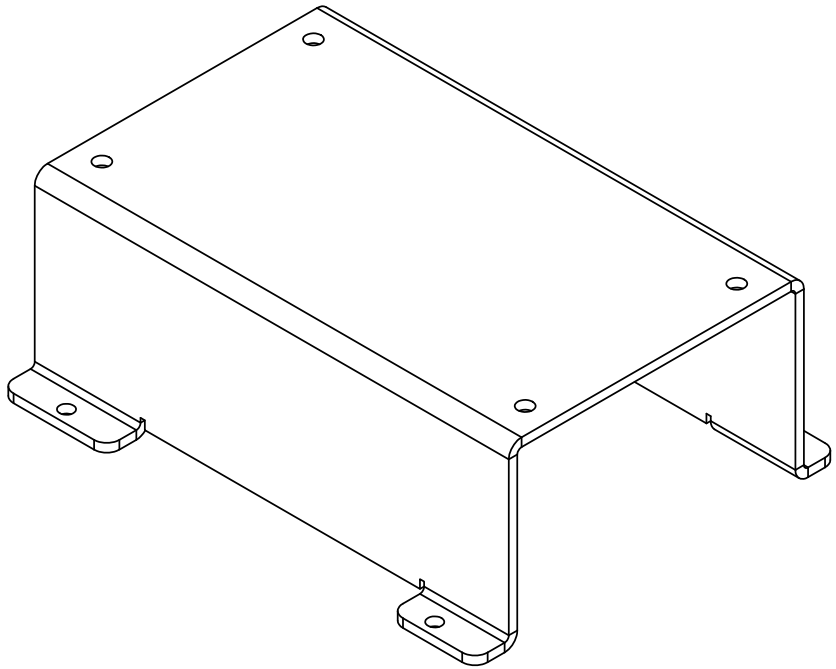

NOTE: AVOID SHARP CORNERS AND EDGES

SL NO	REF	DESCRIPTION	QTY
1	A	∅3.5	4
2	B	∅3.2	4

REV	CN.NO.	DATE	DESCRIPTION	CHECKED	APPROVED	NEXT ASSEMBLY	ITEM	QTY
4								
3								
2								
1		22.08.19	REVISED					
0		17.10.17	ORIGINAL			-	-	-

MATERIAL: ALUMINIUM H32-5052	FINISH: 25 MICRON BLACK ANODIZING	PROJ.	TOL.GEN. ± IS: 2102 TOL.AXIS. ± (MED.)	PRJ. 109	
DRAWN: MALIKSAD	CHECKED	APPROVED	DIMNS: mm	SCALE: NTS	TITLE: TRACO PS HOLDER
DATE: 22.08.19	DATE	DATE	DRG. NUMBER: DPD 36 109 0 271	SIZE: A4	ISSUE: 1
KERALA STATE ELECTRONICS DEVELOPMENT CORPORATION LIMITED				NO.OF SHEETS: 1 / 1	

RESTRICTED

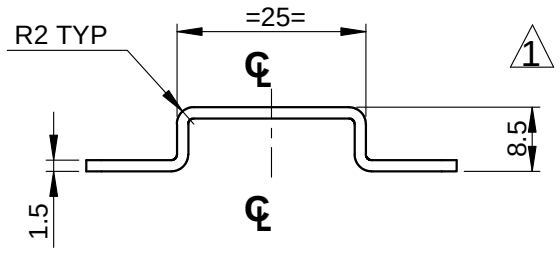

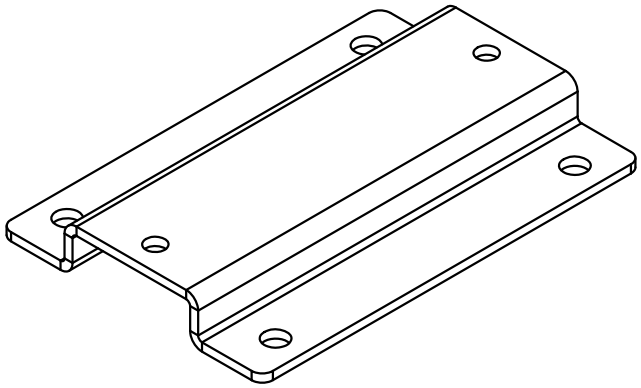

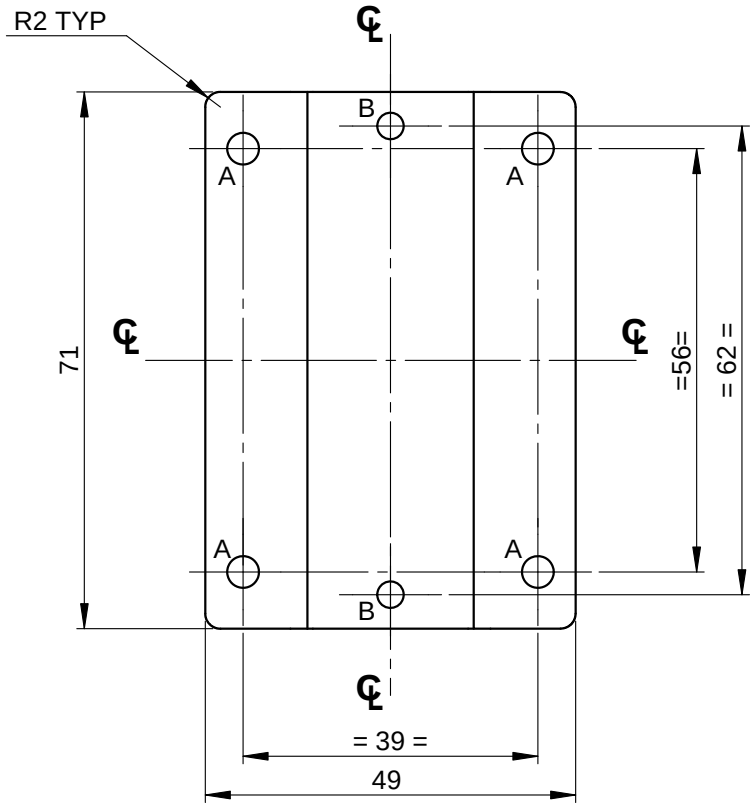

NOTE

AVOID SHARP CORNERS AND EDGES

SL NO	REF	DESCRIPTION	QTY
1	A	∅4.2	4
2	B	∅3.2	2

REV	CN.NO.	DATE	DESCRIPTION	CHECKED	APPROVED	NEXT ASSEMBLY	ITEM	QTY
4								
3								
2								
1		11.11.16	REVISED					
0		30.07.16	ORIGINAL			DSA 36 109 0 017	9	1

MATERIAL	FINISH	PROJ.	TOL.GEN. ± / TOL.AXIS. ±	PRJ.
ALUMINIUM H32-5052	25 MICRON BLACK ANODISING		IS: 2102 (MED.)	109

DRAWN	CHECKED	APPROVED	DIMNS	SCALE	TITLE
MALIKSAD			mm	NTS	TRANSFORMER BRACKET
DATE 16.01.16	DATE	DATE	DRG. NUMBER		SIZE / ISSUE
KERALA STATE ELECTRONICS DEVELOPMENT CORPORATION LIMITED			DPD 36 109 0 219		A4 / 1
					NO.OF SHEETS 1 / 1

RESTRICTED

RESTRICTED

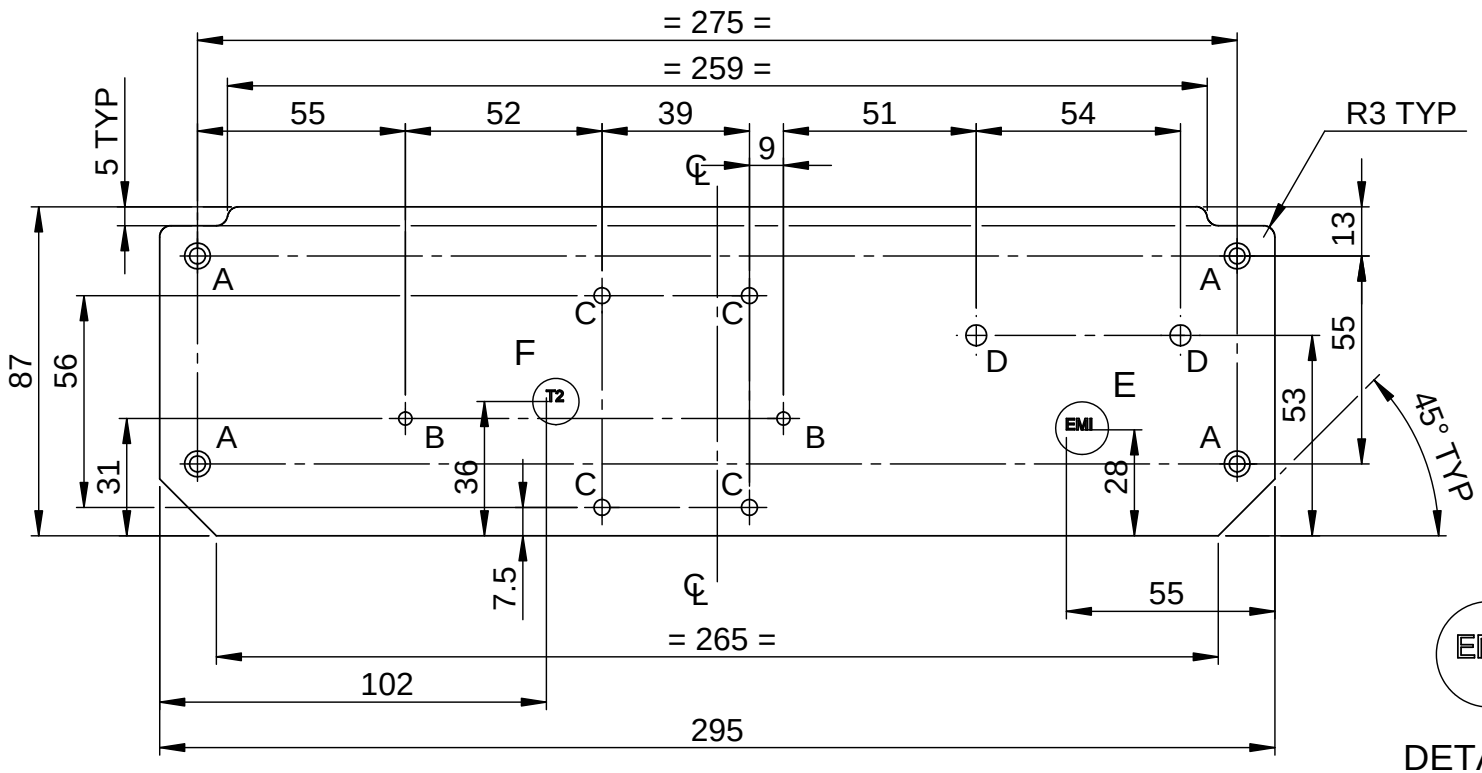

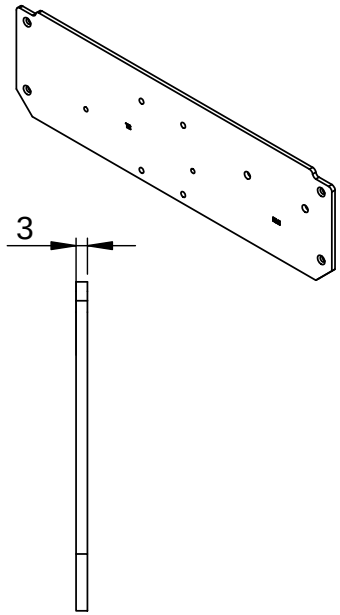

DETAIL E

DETAIL F

NOTE:

1. AVOID SHARP EDGES AND CORNERS
2. 3x0.5↧ TEXT TO BE ENGRAVED AND FILLED WITH BLACK PAINT

SLNO	REF	DESCRIPTION	QTY
1	A	DRILL ∅4.2 ⌵ ∅7.8	4
2	B	∅3.2	2
3	C	∅4.2	4
4	D	∅5.5	2

REV	CN.NO.	DATE	DESCRIPTION	CHECKED	APPROVED	NEXT ASSEMBLY	ITEM	QTY
4								
3								
2								
1								
0		19.09.17	ORIGINAL			DSA 36 109 0 017	3	1

MATERIAL: ALUMINIUM H32-5052	FINISH: YELLOW CC COATING	PROJ.	TOL.GEN. ± / TOL.AXIS. ± IS: 2102 (MED.)	PRJ. 109	
DRAWN: MALIKSAD	CHECKED	APPROVED	DIMNS: mm	SCALE: NTS	TITLE: TRANSFORMER MOUNTING PLATE
DATE: 13.09.17	DATE	DATE	DRG. NUMBER: DPD 36 109 0 131	SIZE: A4	ISSUE: 1
KERALA STATE ELECTRONICS DEVELOPMENT CORPORATION LIMITED				NO.OF SHEETS: 1 / 1	

RESTRICTED

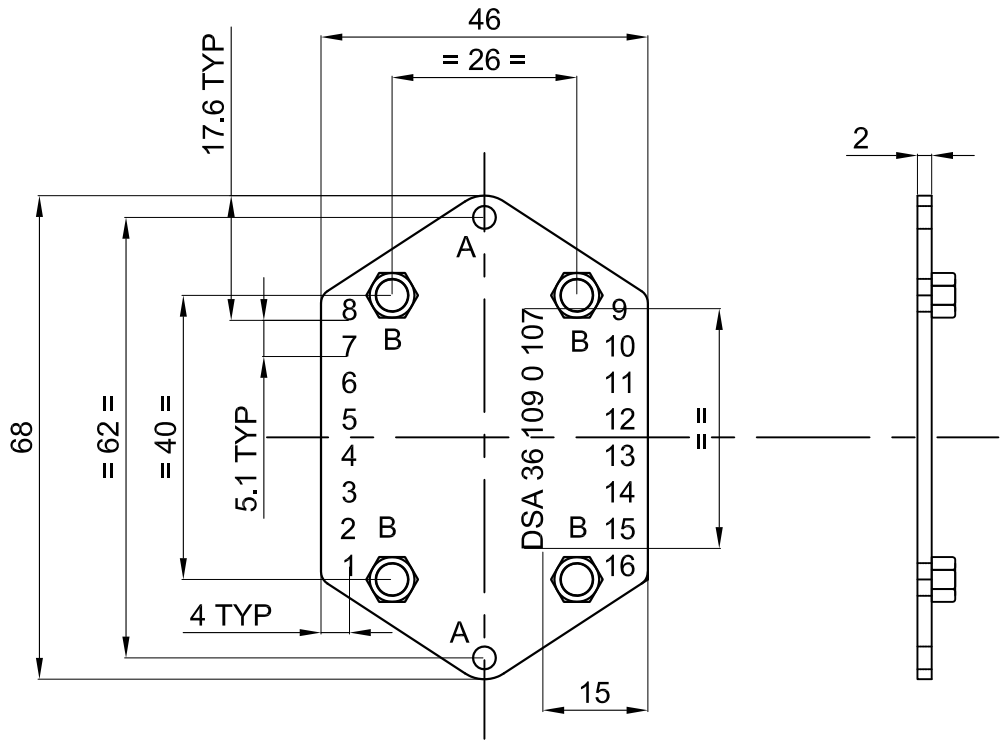

SL NO	REF	DESCRIPTION	QTY
1	A	Ø3.5	2
2	B	Ø4.6	4

NOTE

1. 3mm TEXT TO BE ENGRAVED AND FILL WITH WHITE COLOR PAINT
2. M3 RIVET NUT TO BE RIVETED ON HOLE 'B'

REV	CN.NO.	DATE	DESCRIPTION	CHECKED	APPROVED	NEXT ASSEMBLY	ITEM	QTY
4								
3								
2								
1								
0		26.08.16	ORIGINAL			DSA 36 109 0 107	5	1

MATERIAL	FINISH	PROJ.		PRJ.
2 mm ALUMINUM SHEET	25 MICRON BLACK ANODIZING		TOL.GEN. ± IS:2102 TOL.AXIS. ± (MED)	109

DRAWN	CHECKED	APPROVED	DIMNS	SCALE	TITLE
MALIKSAD			mm	NTS	TRANSFORMER TOP PLATE
DATE 26.08.16	DATE	DATE			

KERALA STATE ELECTRONICS DEVELOPMENT CORPORATION LIMITED.

DRG. NUMBER: DPD 36 109 0 134

SIZE	ISSUE
A4	1
NO.OF SHEETS	1/1

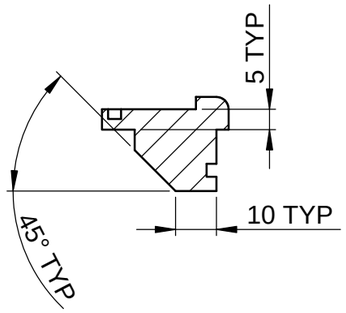

SECTION F-F

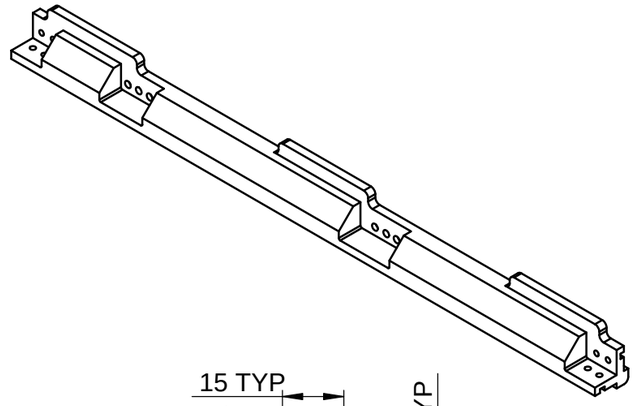

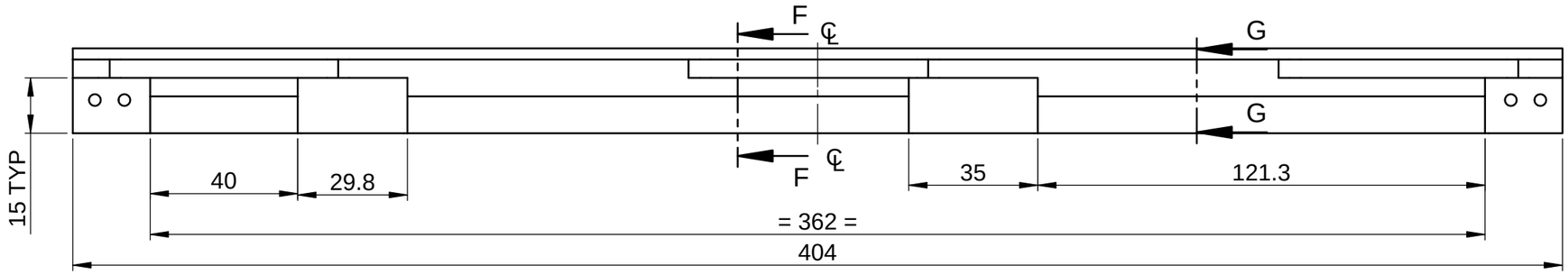

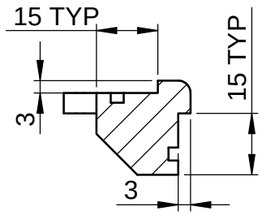

SECTION G-G

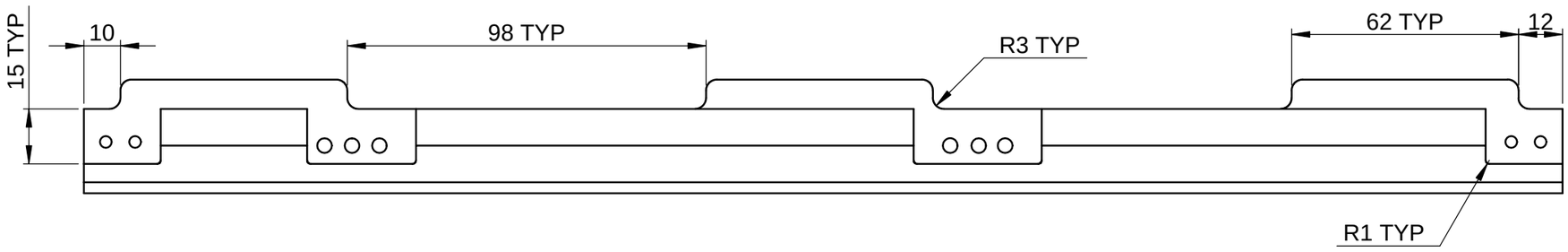

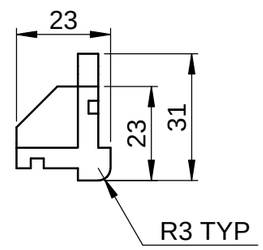

NOTE

1. AVOID SHARP CORNERS AND EDGES
2. ALL BURRS MUST BE REMOVED

SL NO	REF	DESCRIPTION	QTY
1	A	DRILL ∅3.2 ⌴ ∅6.2, ↧ 2.4	8
2	B	DRILL ∅6.2, ↧ 15 AND M6 HELICOIL TAP	6
3	C	DRILL ∅4.2 ⌴ ∅8 ↧ 2.4	4
4	D	DRILL ∅4.1 AND M4 HELICOIL TAP	2
5	E	DRILL ∅4.1 ↧ 10 AND M4 HELICOIL TAP	2

REV	CN.NO.	DATE	DESCRIPTION	CHECKED	APPROVED	NEXT ASSEMBLY	ITEM	QTY
4								
3								
2								
1								
0		19.08.17	ORIGINAL			DSA 36 109 0 020	14	1

MATERIAL: ALUMINIUM HE-30	FINISH: YELLOW CC COATING	PROJ.	TOL.GEN. ± IS:2102 TOL.AXIS. ± (MED)	PRJ. 109	
DRAWN: MALIKSAD	CHECKED	APPROVED	DIMNS: mm	SCALE: NTS	TITLE: VT FRONT LEFT FRAME
DATE 19.08.17	DATE	DATE	DRG. NUMBER: DPD 36 109 0 100	SIZE: A3	ISSUE: 1
KERALA STATE ELECTRONICS DEVELOPMENT CORPORATION LIMITED.				NO.OF SHEETS: 1/2	

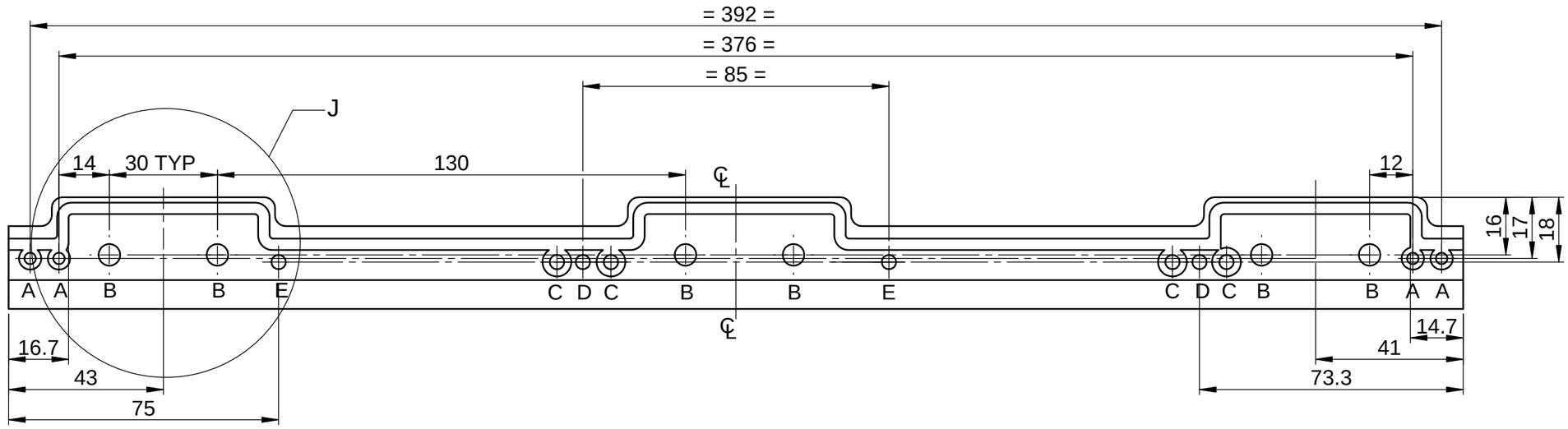

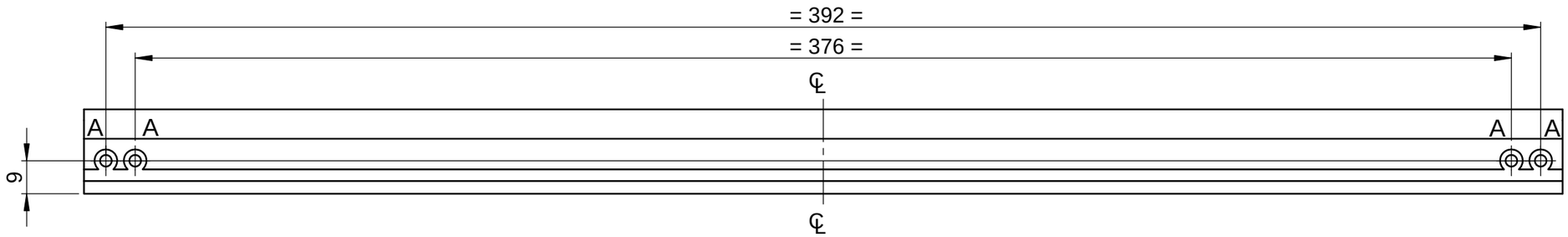

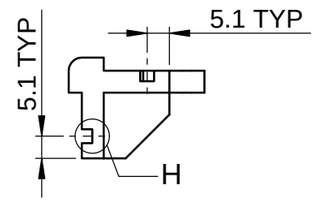

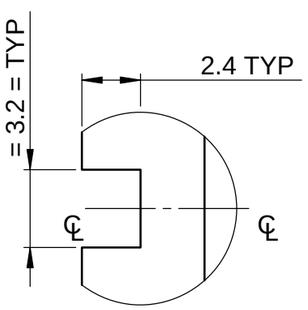

DETAIL H

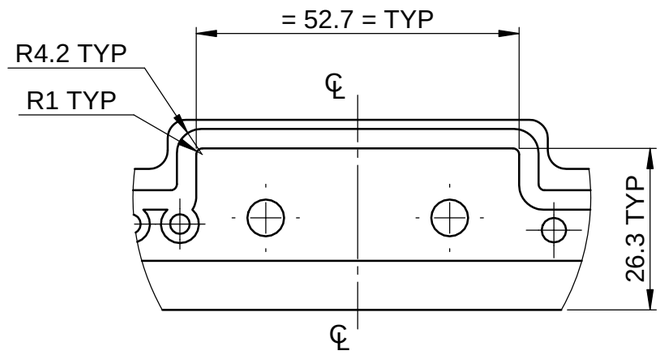

DETAIL J

REV	CN.NO.	DATE	DESCRIPTION	CHECKED	APPROVED	NEXT ASSEMBLY	ITEM	QTY
4								
3								
2								
1								
0		19.08.17	ORIGINAL			DSA 36 109 0 020	14	1

MATERIAL: ALUMINIUM HE-30	FINISH: YELLOW CC COATING	PROJ.	TOL.GEN. ± IS:2102 TOL.AXIS. ± (MED)	PRJ. 109	
DRAWN: MALIKSAD	CHECKED	APPROVED	DIMNS: mm / SCALE: NTS	TITLE: VT FRONT LEFT FRAME	
DATE 19.08.17	DATE	DATE			

KERALA STATE ELECTRONICS DEVELOPMENT CORPORATION LIMITED

DRG. NUMBER: DPD 36 109 0 100

SIZE	ISSUE
A3	1
NO.OF SHEETS	2 / 2

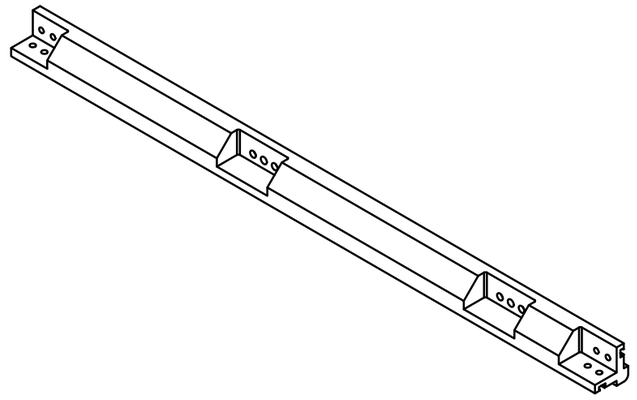

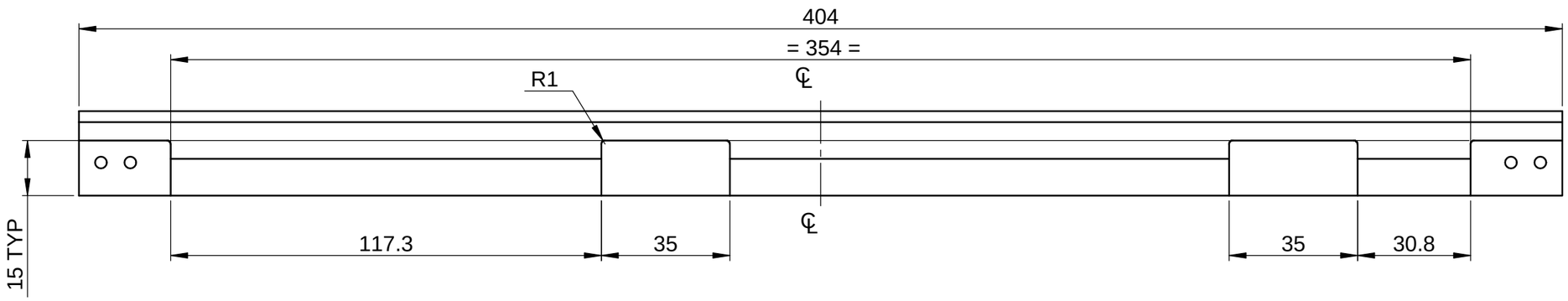

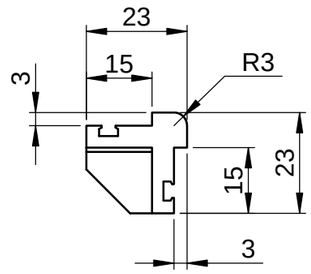

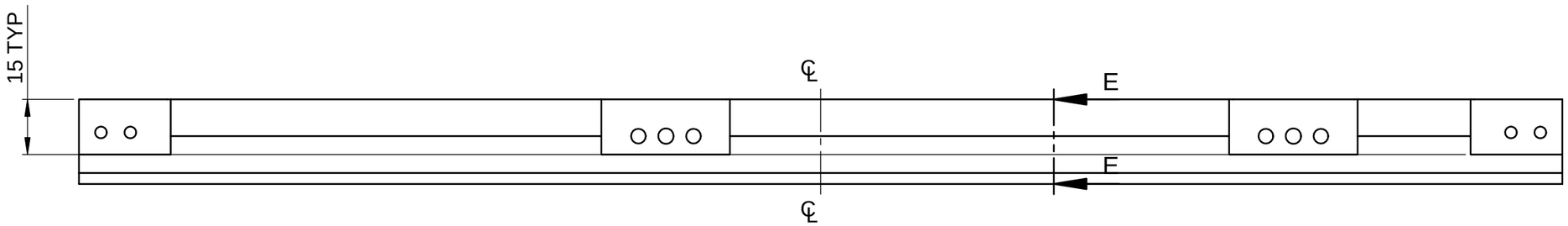

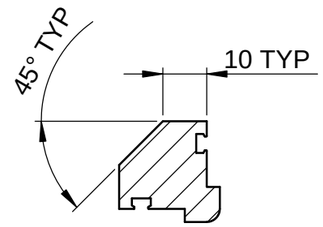

SECTION E-E

NOTE

1. AVOID SHARP CORNERS AND EDGES
2. ALL BURRS MUST BE REMOVED

SL NO	REF	DESCRIPTION	QTY
1	A	DRILL ∅3.2 ⌴ ∅6.2, ↧2.4	8
2	B	DRILL ∅4.2 ⌴ ∅8↧2.4	4
3	C	DRILL ∅ 4.1 AND M4 HELICOIL TAP	2
4	D	DRILL ∅ 4.1 ↧10 AND M4 HELICOIL TAP	2

REV	CN.NO.	DATE	DESCRIPTION	CHECKED	APPROVED	NEXT ASSEMBLY	ITEM	QTY
4								
3								
2								
1								
0		19.08.17	ORIGINAL			DSA 36 109 0 020	21	1

MATERIAL: ALUMINIUM HE-30	FINISH: YELLOW CC COATING	PROJ.	TOL.GEN. ± IS:2102 TOL.AXIS. ± (MED)	PRJ. 109	
DRAWN: MALIKSAD	CHECKED	APPROVED	DIMNS: mm / SCALE: NTS	TITLE: VT FRONT RIGHT FRAME	
DATE 19.08.17	DATE	DATE			

KERALA STATE ELECTRONICS DEVELOPMENT CORPORATION LIMITED

DRG. NUMBER: DPD 36 109 0 171

SIZE	ISSUE
A3	1
NO.OF SHEETS	1 / 2

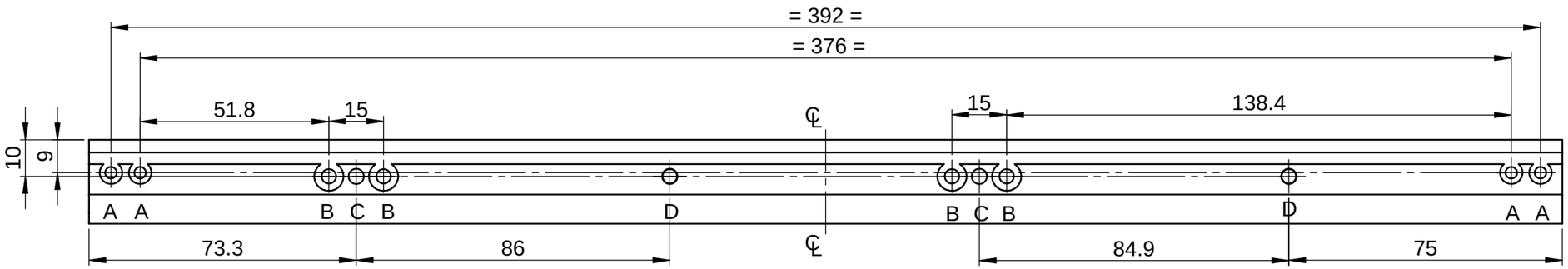

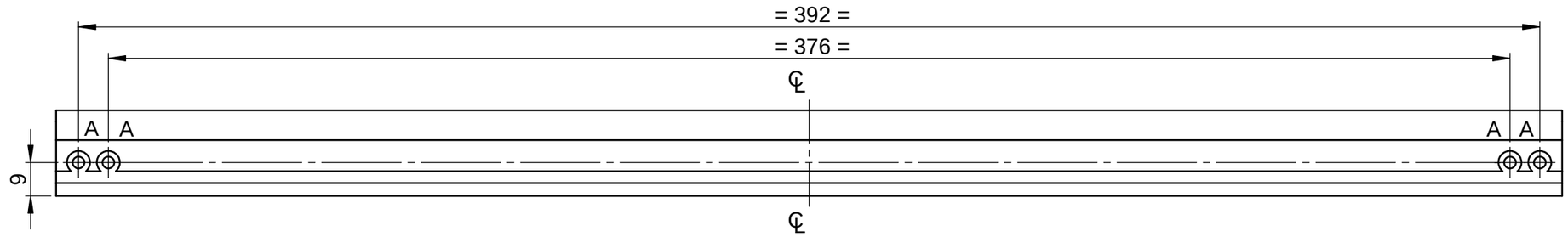

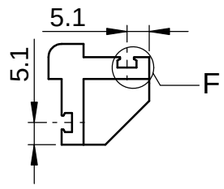

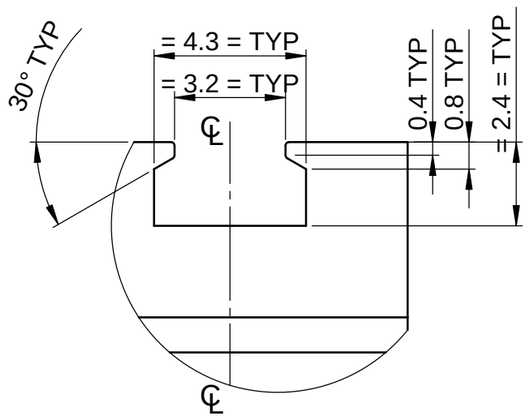

DETAIL F

REV	CN.NO.	DATE	DESCRIPTION	CHECKED	APPROVED	NEXT ASSEMBLY	ITEM	QTY
4								
3								
2								
1								
0		19.08.17	ORIGINAL			DSA 36 109 0 020	21	1

MATERIAL: ALUMINIUM HE-30	FINISH: YELLOW CC COATING	PROJ.	TOL.GEN. ± IS:2102 TOL.AXIS. ± (MED)	PRJ. 109	
DRAWN: MALIKSAD	CHECKED	APPROVED	DIMNS: mm	SCALE: NTS	TITLE: VT FRONT RIGHT FRAME
DATE 19.08.17	DATE	DATE	DRG. NUMBER: DPD 36 109 0 171	SIZE: A3	ISSUE: 1
KERALA STATE ELECTRONICS DEVELOPMENT CORPORATION LIMITED.				NO.OF SHEETS: 2 / 2	

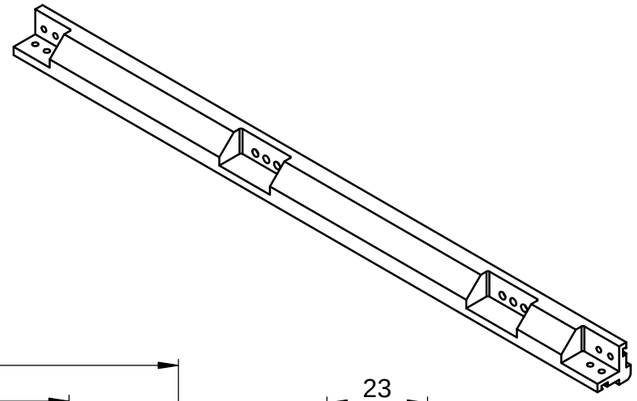

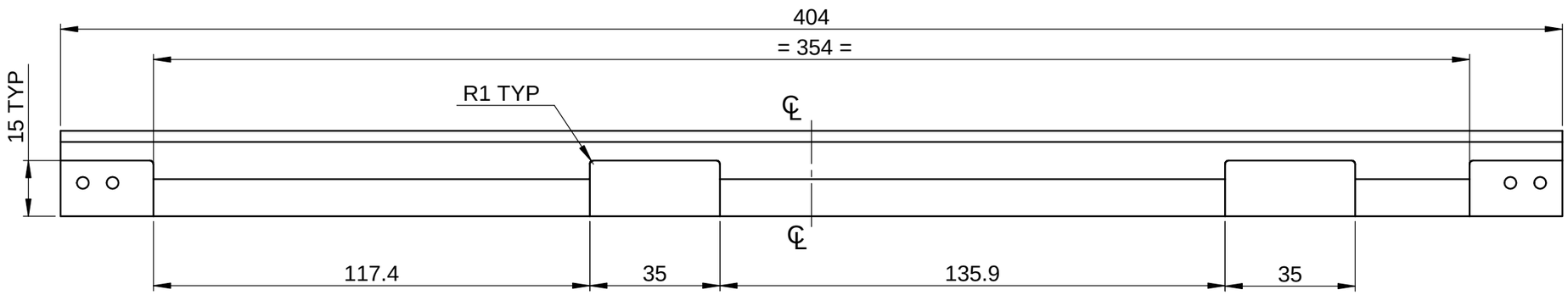

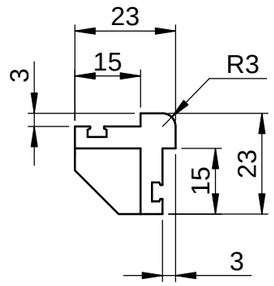

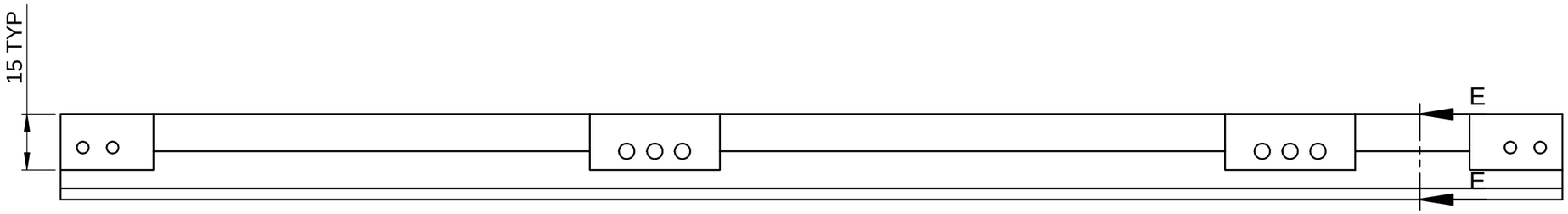

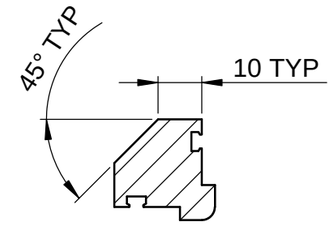

SECTION E-E

NOTE

1. AVOID SHARP CORNERS AND EDGES
2. ALL BURRS MUST BE REMOVED

SL NO	REF	DESCRIPTION	QTY
1	A	DRILL ⌀3.2 ⌴ ⌀6.2, ↧2.4	8
2	B	DRILL ⌀4.2 ⌴ ⌀8, ↧2.4	4
3	C	DRILL ⌀4.1, ↧5 AND M4 HELICOIL TAP	7
4	D	DRILL ⌀4.1 AND M4 HELICOIL TAP	2

REV	CN.NO.	DATE	DESCRIPTION	CHECKED	APPROVED	NEXT ASSEMBLY	ITEM	QTY
4								
3								
2								
1								
0		19.08.17	ORIGINAL			DSA 36 109 0 020	23	1

MATERIAL: ALUMINIUM HE-30	FINISH: YELLOW CC COATING	PROJ.	TOL.GEN. ± IS:2102 TOL.AXIS. ± (MED)	PRJ. 109	
DRAWN: MALIKSAD	CHECKED	APPROVED	DIMNS: mm / SCALE: NTS	TITLE: VT REAR LEFT FRAME	
DATE 19.08.17	DATE	DATE	DRG. NUMBER: DPD 36 109 0 174	SIZE: A3	ISSUE: 1
KERALA STATE ELECTRONICS DEVELOPMENT CORPORATION LIMITED.				NO.OF SHEETS: 1 / 2	

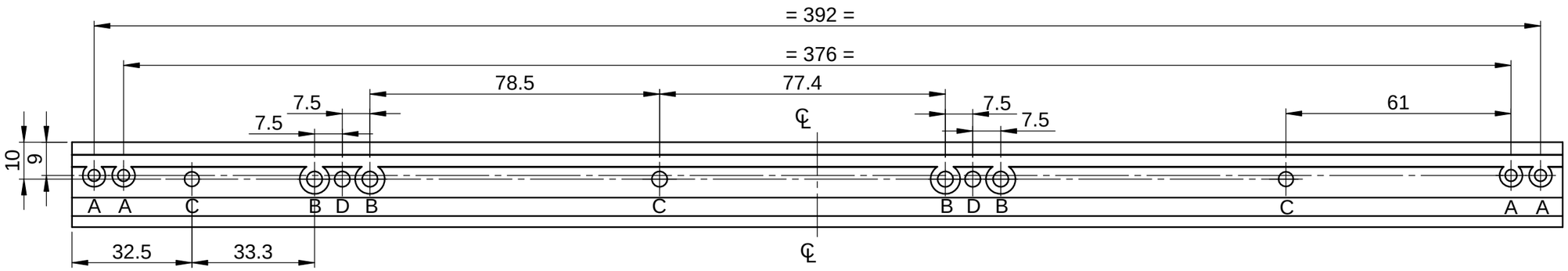

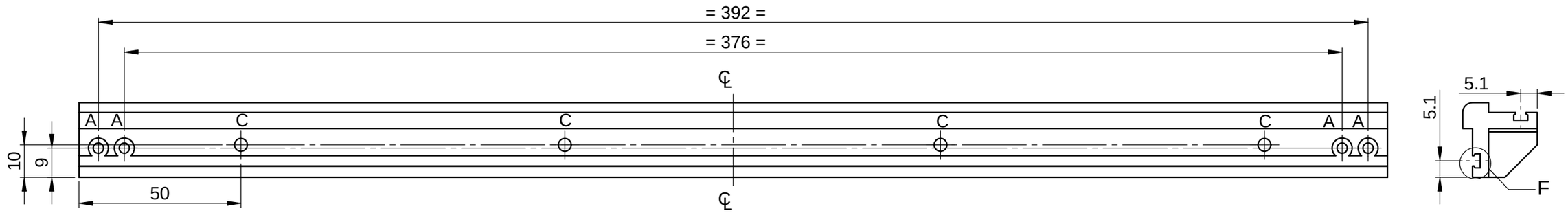

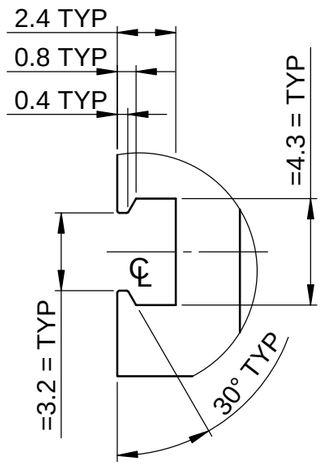

DETAIL F

REV	CN.NO.	DATE	DESCRIPTION	CHECKED	APPROVED	NEXT ASSEMBLY	ITEM	QTY
4								
3								
2								
1								
0		19.08.17	ORIGINAL			DSA 36 109 0 020	23	1

MATERIAL: ALUMINIUM HE-30	FINISH: YELLOW CC COATING	PROJ.	TOL.GEN. ± IS:2102 TOL.AXIS. ± (MED)	PRJ. 109	
DRAWN: MALIKSAD	CHECKED	APPROVED	DIMNS: mm	SCALE: NTS	TITLE: VT REAR LEFT FRAME
DATE 19.08.17	DATE	DATE			

KERALA STATE ELECTRONICS DEVELOPMENT CORPORATION LIMITED.

DRG. NUMBER: DPD 36 109 0 174

SIZE	ISSUE
A3	1
NO.OF SHEETS	2 / 2

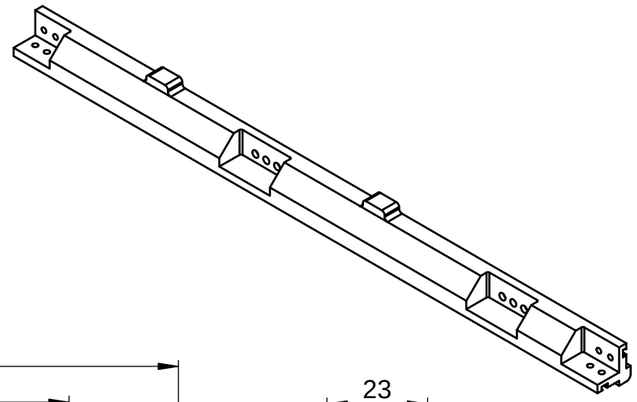

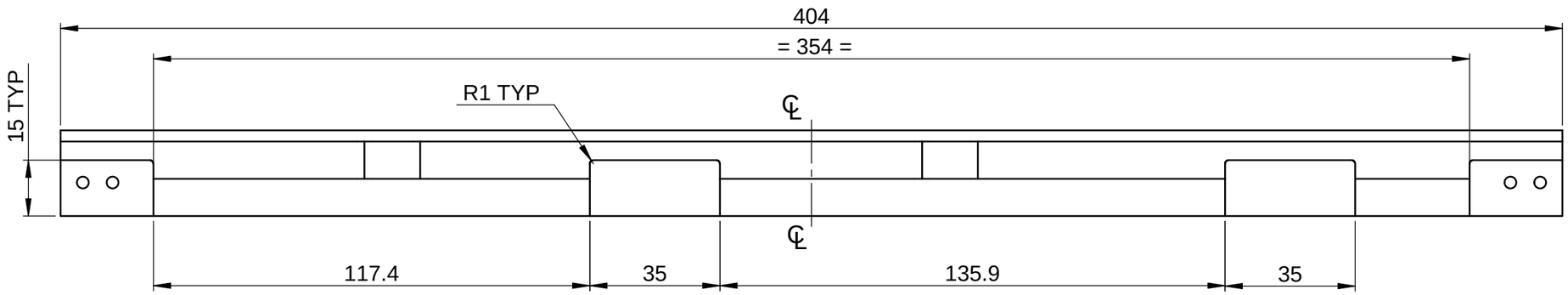

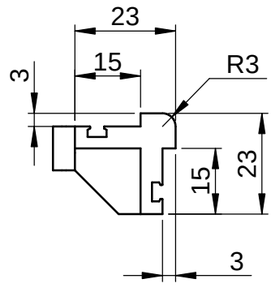

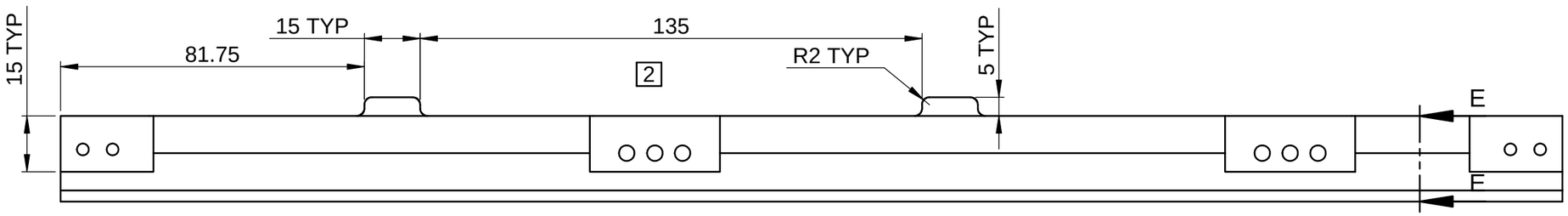

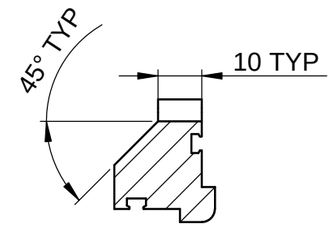

SECTION E-E

NOTE

1. AVOID SHARP CORNERS AND EDGES
2. ALL BURRS MUST BE REMOVED

SL NO	REF	DESCRIPTION	QTY
1	A	DRILL ∅3.2 ⌴ ∅6.2, ↧2.4	8
2	B	DRILL ∅4.2 ⌴ ∅8, ↧2.4	4
3	C	DRILL ∅4.1, ↧5 AND M4 HELICOIL TAP	7
4	D	DRILL ∅4.1 AND M4 HELICOIL TAP	2
5	G	DRILL ∅3.1, ↧7 AND M3 HELICOIL TAP	2

REV	CN.NO.	DATE	DESCRIPTION	CHECKED	APPROVED	NEXT ASSEMBLY	ITEM	QTY
4								
3								
2		31.01.20	REVISED					
1		22.08.19	REVISED					
0		19.08.17	ORIGINAL			DSA 36 109 0 020	23	1

MATERIAL: ALUMINIUM HE-30	FINISH: YELLOW CC COATING	PROJ.	TOL.GEN. ± IS:2102 TOL.AXIS. ± (MED)	PRJ. 109	
DRAWN: MALIKSAD	CHECKED	APPROVED	DIMNS: mm	SCALE: NTS	TITLE: VT REAR LEFT FRAME
DATE 22.08.19	DATE	DATE	DRG. NUMBER: DPD 36 109 0 174	SIZE: A3	ISSUE: 1
KERALA STATE ELECTRONICS DEVELOPMENT CORPORATION LIMITED.				NO.OF SHEETS: 1/2	

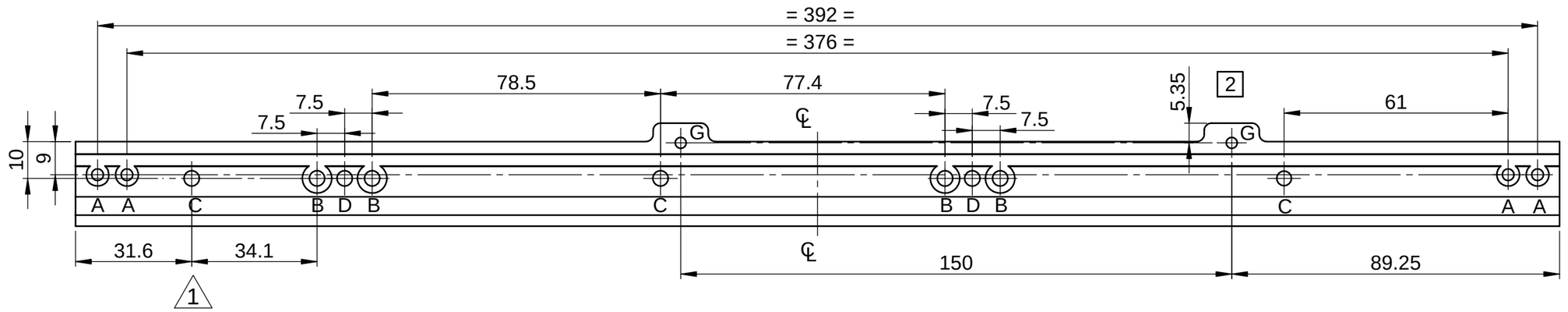

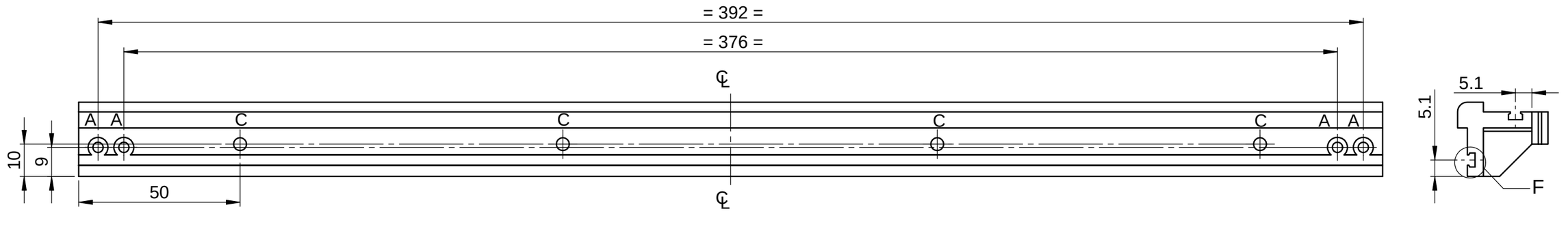

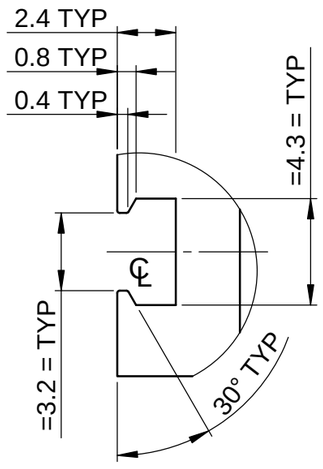

DETAIL F

REV	CN.NO.	DATE	DESCRIPTION	CHECKED	APPROVED	NEXT ASSEMBLY	ITEM	QTY
4								
3								
2		22.08.19	REVISED					
1		22.08.19	REVISED					
0		19.08.17	ORIGINAL			DSA 36 109 0 020	23	1

MATERIAL: ALUMINIUM HE-30	FINISH: YELLOW CC COATING	PROJ.	TOL.GEN. ± IS:2102 TOL.AXIS. ± (MED)	PRJ. 109	
DRAWN: MALIKSAD	CHECKED	APPROVED	DIMNS: mm	SCALE: NTS	TITLE: VT REAR LEFT FRAME
DATE 22.08.19	DATE	DATE	DRG. NUMBER: DPD 36 109 0 174	SIZE: A3	ISSUE: 1
KERALA STATE ELECTRONICS DEVELOPMENT CORPORATION LIMITED.				NO.OF SHEETS: 2 / 2	

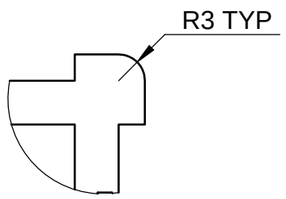

DETAIL G

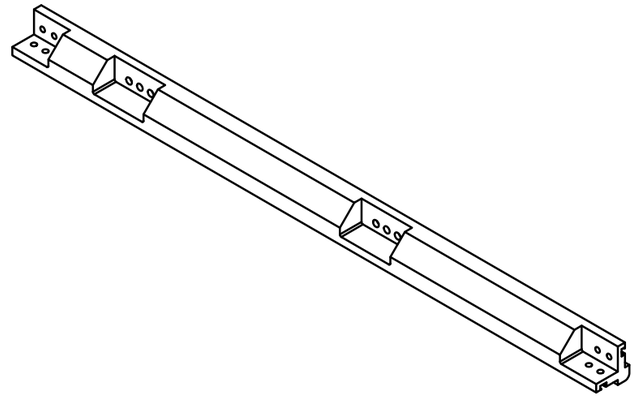

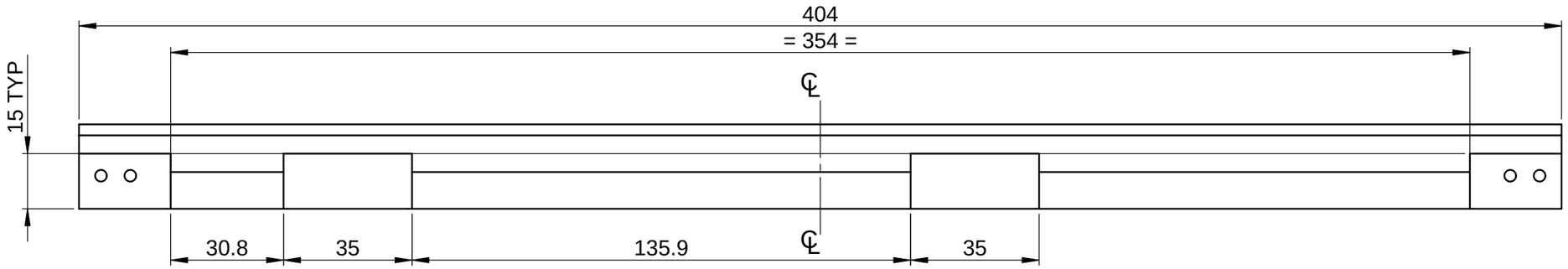

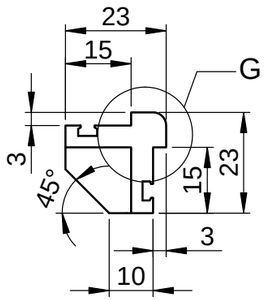

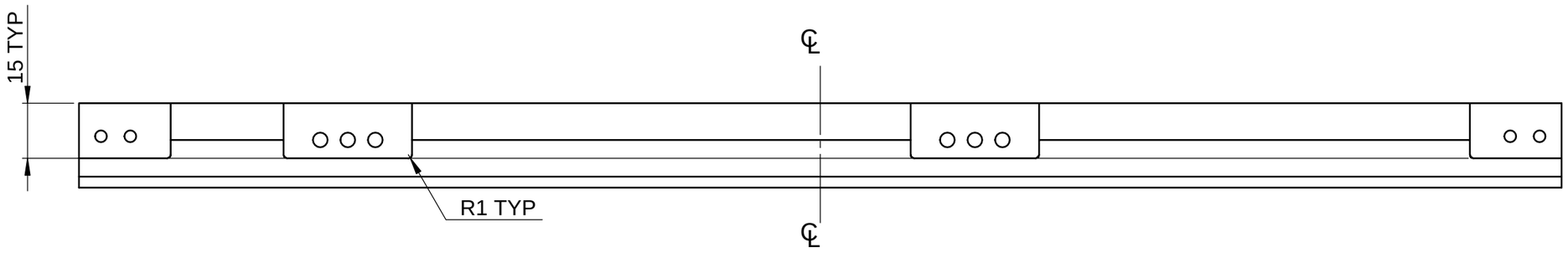

REV	CN.NO.	DATE	DESCRIPTION	CHECKED	APPROVED	NEXT ASSEMBLY	ITEM	QTY
4								
3								
2								
1		22.08.19	REVISED					
0		19.08.17	ORIGINAL			DSA 36 109 0 020	7	1

MATERIAL: ALUMINIUM HE-30	FINISH: YELLOW CC COATING	PROJ.	TOL.GEN. ± IS:2102 TOL.AXIS. ± (MED)	PRJ. 109	
DRAWN: MALIKSAD	CHECKED	APPROVED	DIMNS: mm	SCALE: NTS	TITLE: VT REAR RT FRAME
DATE 22.08.19	DATE	DATE			

KERALA STATE ELECTRONICS DEVELOPMENT CORPORATION LIMITED.

DRG. NUMBER: DPD 36 109 0 093

SIZE	ISSUE
A3	1
NO.OF SHEETS	1 / 2

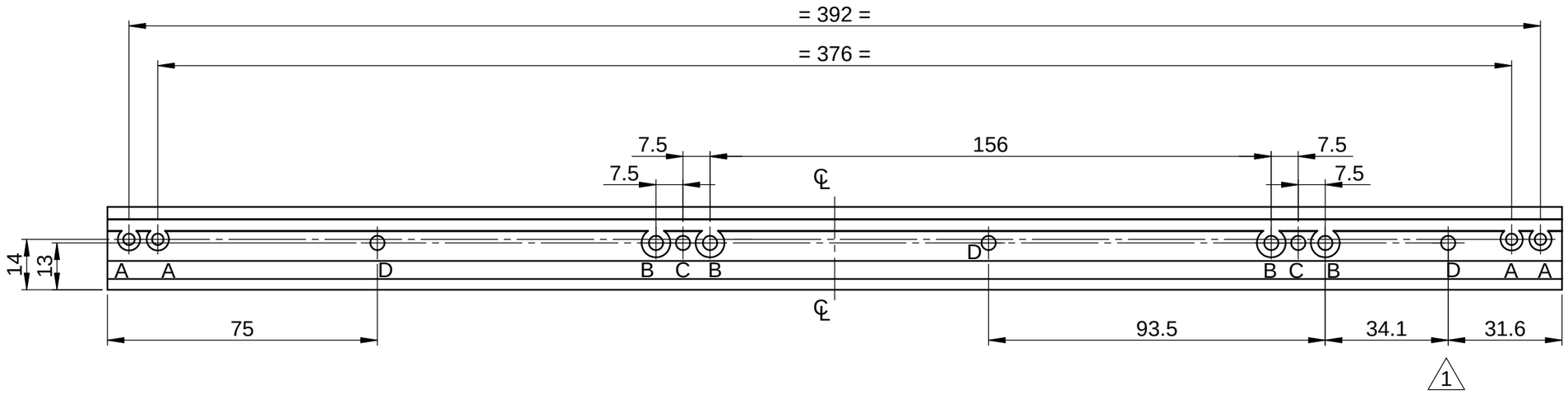

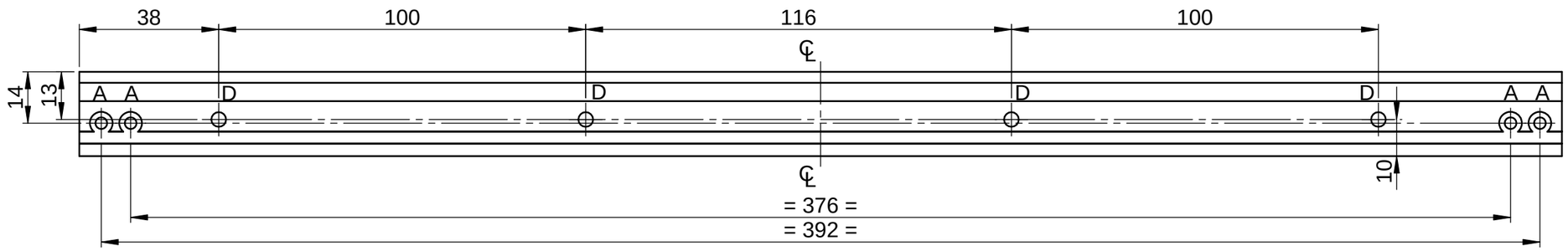

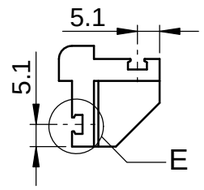

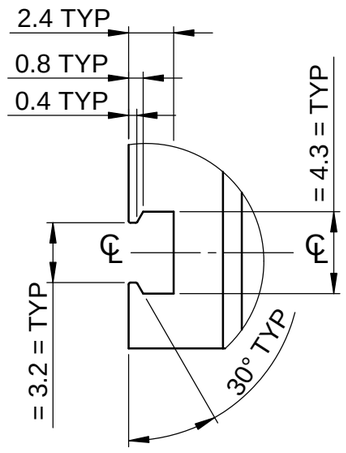

DETAIL E

NOTE

1. AVOID SHARP CORNERS AND EDGES
2. ALL BURRS MUST BE REMOVED

SL NO	REF	DESCRIPTION	QTY
1	A	DRILL ⌀3.2 ⌴ ⌀6.2, ↧2.4	8
2	B	DRILL ⌀4.2 ⌴ ⌀8, ↧2.4	4
3	C	DRILL ⌀4.1 AND M4 HELICOIL TAP	2
4	D	DRILL ⌀4.1, ↧5 AND M4 HELICOIL TAP	7

REV	CN.NO.	DATE	DESCRIPTION	CHECKED	APPROVED	NEXT ASSEMBLY	ITEM	QTY
4								
3								
2								
1		22.08.19	REVISED					
0		19.08.17	ORIGINAL			DSA 36 109 0 020	7	1

MATERIAL: ALUMINIUM HE-30	FINISH: YELLOW CC COATING	PROJ.	TOL.GEN. ± IS:2102 TOL.AXIS. ± (MED)	PRJ. 109	
DRAWN: MALIKSAD	CHECKED	APPROVED	DIMNS: mm	SCALE: NTS	TITLE: VT REAR RT FRAME
DATE 22.08.19	DATE	DATE	DRG. NUMBER: DPD 36 109 0 093	SIZE: A3	ISSUE: 1
KERALA STATE ELECTRONICS DEVELOPMENT CORPORATION LIMITED.				NO.OF SHEETS: 2 / 2	

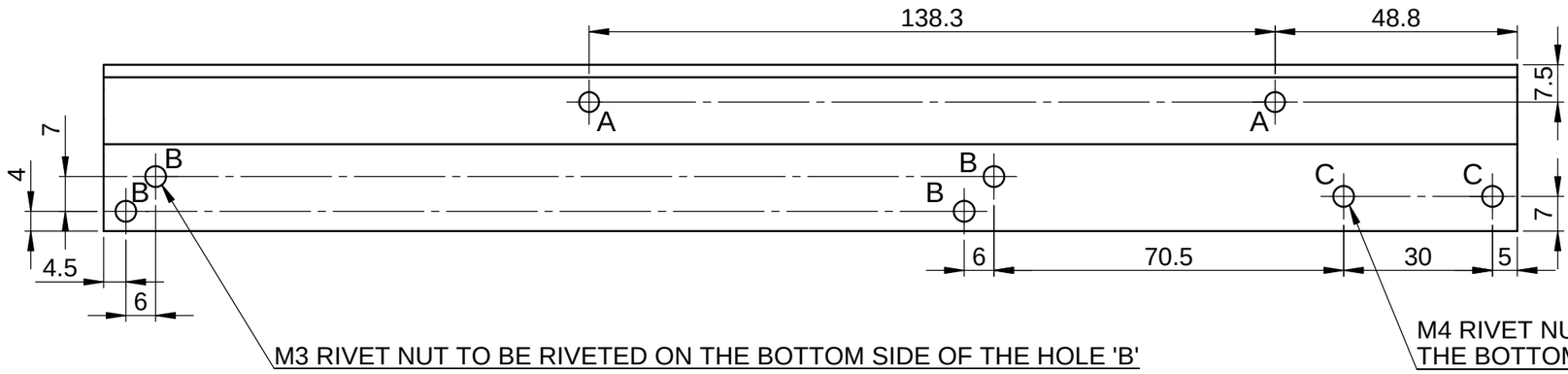

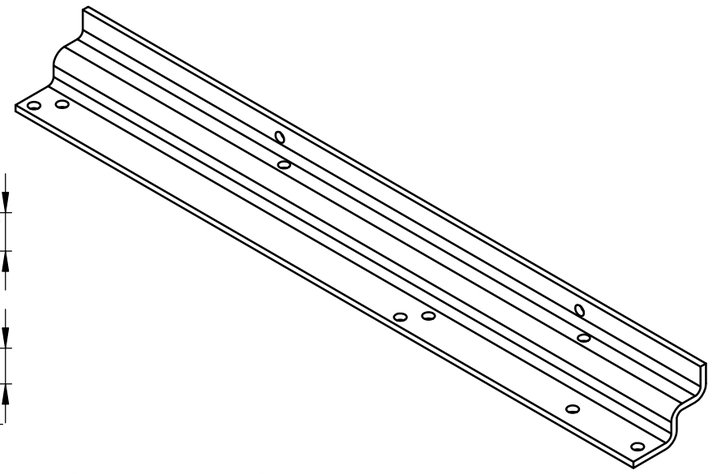

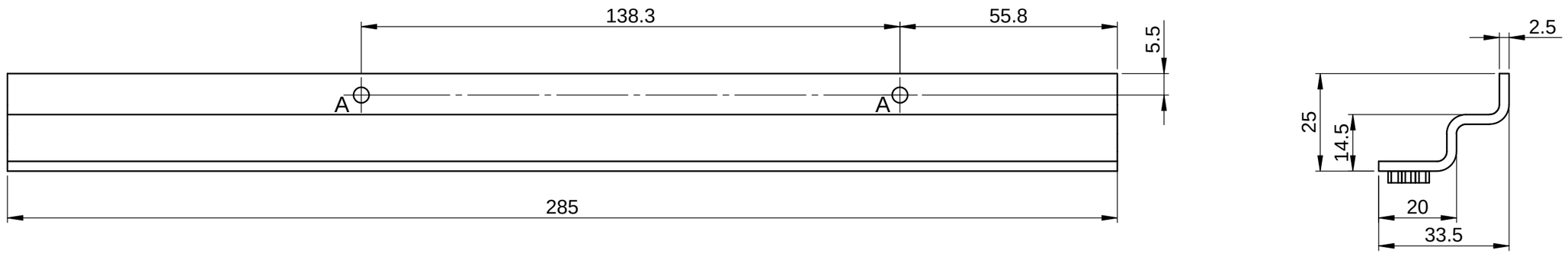

NOTE

1. AVOID SHARP CORNERS AND EDGES
2. ALL BURRS MUST BE REMOVED

SL NO	REF	DESCRIPTION	QTY
1	A	∅3.5	4
2	B	M3 RIVET NUT	4
3	C	M4 RIVET NUT	2

REV	CN.NO.	DATE	DESCRIPTION	CHECKED	APPROVED	NEXT ASSEMBLY	ITEM	QTY
4								
3								
2								
1								
0		19.08.17	ORIGINAL			DSA 36 109 0 021	10	1

MATERIAL: ALIMINIUM H32-5052	FINISH: YELLOW CC COATING	PROJ.	TOL.GEN. ± IS:2102 TOL.AXIS. ± (MED)	PRJ. 109	
DRAWN: MALIKSAD	CHECKED	APPROVED	DIMNS: mm	SCALE: NTS	TITLE: Z CLAMP 1
DATE 19.08.17	DATE	DATE	DRG. NUMBER: DPD 36 109 0 052	SIZE: A3	ISSUE: 1
KERALA STATE ELECTRONICS DEVELOPMENT CORPORATION LIMITED.				NO.OF SHEETS: 1 / 1	

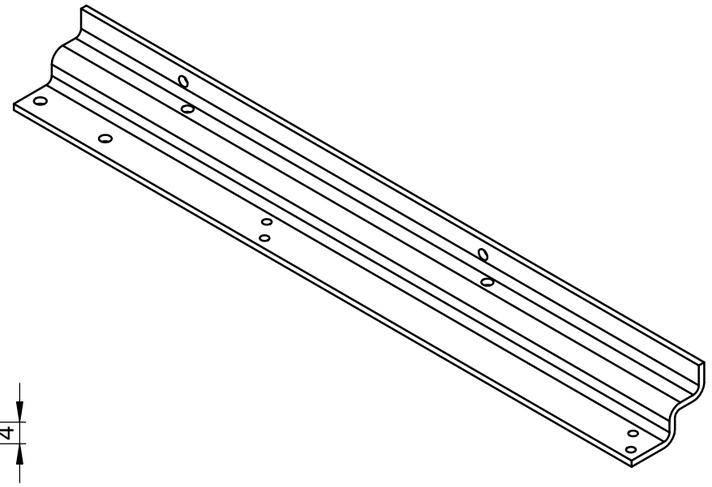

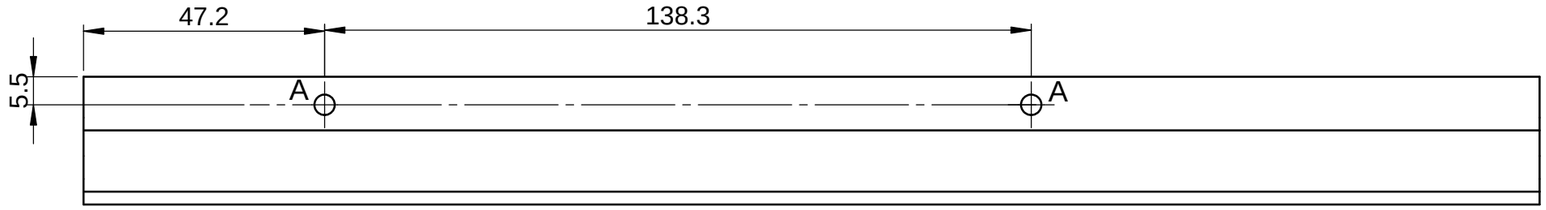

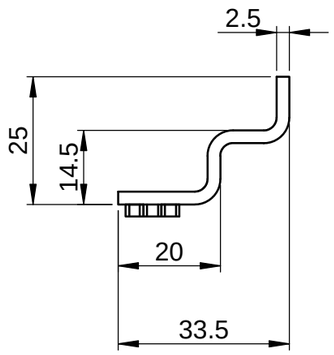

NOTE

1. AVOID SHARP CORNERS AND EDGES
2. ALL BURRS MUST BE REMOVED

SL NO	REF	DESCRIPTION	QTY
1	A	∅3.5	4
2	B	M3 RIVET NUT	4
3	C	M4 RIVET NUT	2

REV	CN.NO.	DATE	DESCRIPTION	CHECKED	APPROVED	NEXT ASSEMBLY	ITEM	QTY
4								
3								
2								
1								
0		19.08.17	ORIGINAL			DSA 36 109 0 021	7	1

MATERIAL: ALUMINIUM H32-5052	FINISH: YELLOW CC COATING	PROJ.	TOL.GEN. ± IS:2102 TOL.AXIS. ± (MED)	PRJ. 109	
DRAWN: MALIKSAD	CHECKED	APPROVED	DIMNS: mm	SCALE: NTS	TITLE: Z CLAMP 2
DATE 19.08.17	DATE	DATE	DRG. NUMBER: DPD 36 109 0 050	SIZE: A3	ISSUE: 1
KERALA STATE ELECTRONICS DEVELOPMENT CORPORATION LIMITED.				NO.OF SHEETS: 1 / 1	

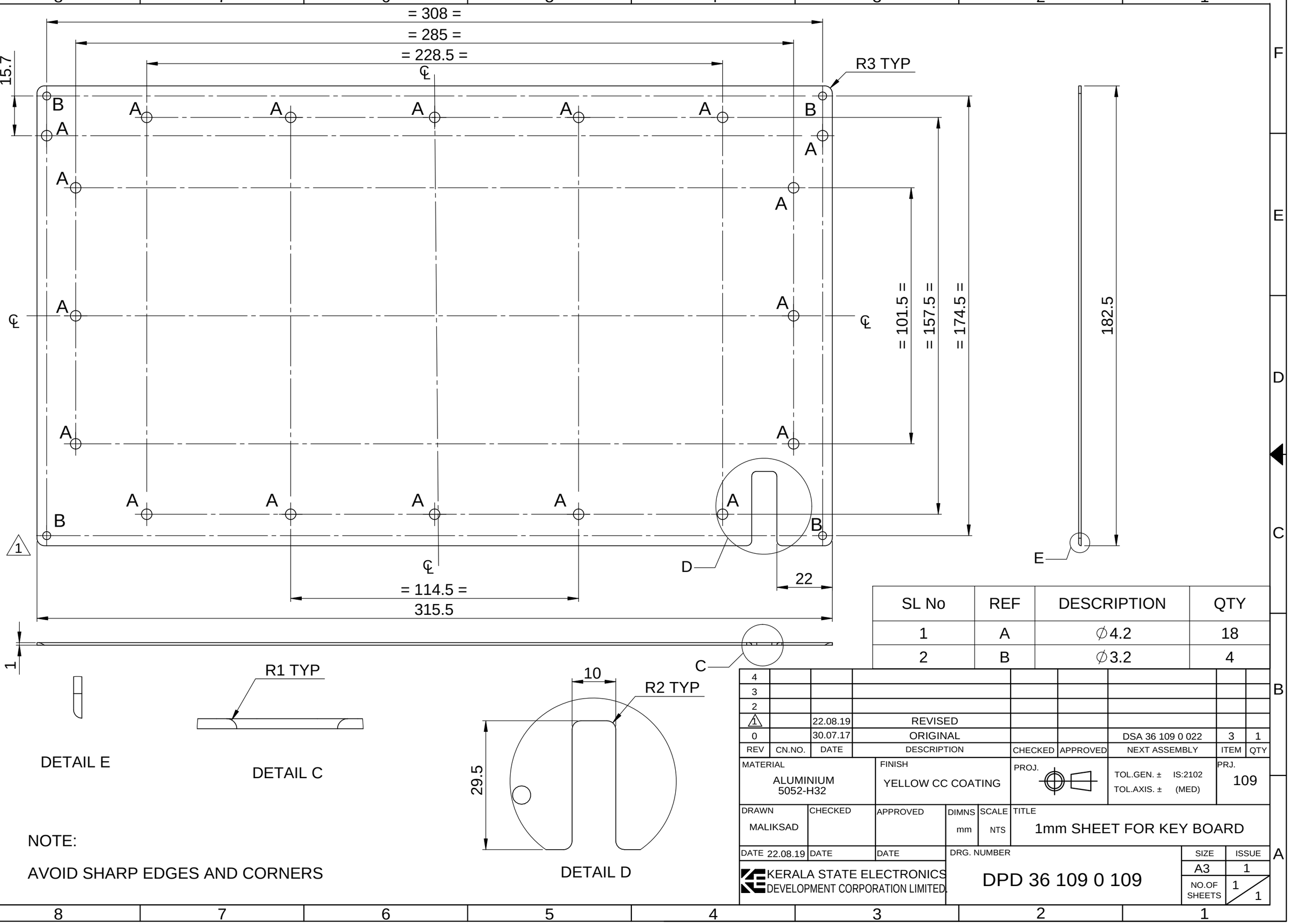

NOTE:

AVOID SHARP EDGES AND CORNERS

SL No	REF	DESCRIPTION	QTY
1	A	∅4.2	18
2	B	∅3.2	4

REV	CN.NO.	DATE	DESCRIPTION	CHECKED	APPROVED	NEXT ASSEMBLY	ITEM	QTY
4								
3								
2								
1		22.08.19	REVISED					
0		30.07.17	ORIGINAL			DSA 36 109 0 022	3	1

MATERIAL: ALUMINIUM 5052-H32	FINISH: YELLOW CC COATING	PROJ.	TOL.GEN. ± IS:2102 TOL.AXIS. ± (MED)	PRJ. 109	
DRAWN: MALIKSAD	CHECKED	APPROVED	DIMNS: mm	SCALE: NTS	TITLE: 1mm SHEET FOR KEY BOARD
DATE: 22.08.19	DATE	DATE	DRG. NUMBER: DPD 36 109 0 109	SIZE: A3	ISSUE: 1
KERALA STATE ELECTRONICS DEVELOPMENT CORPORATION LIMITED.				NO.OF SHEETS: 1 / 1	

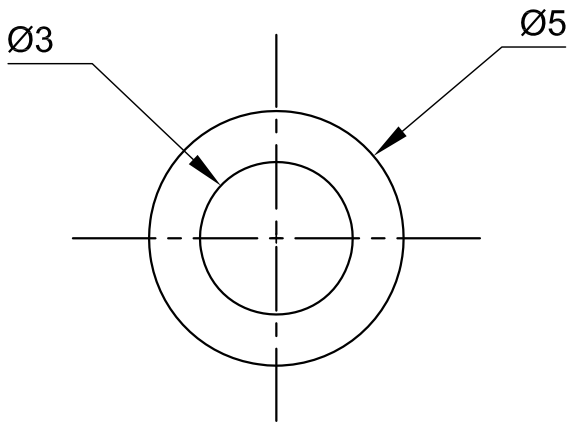

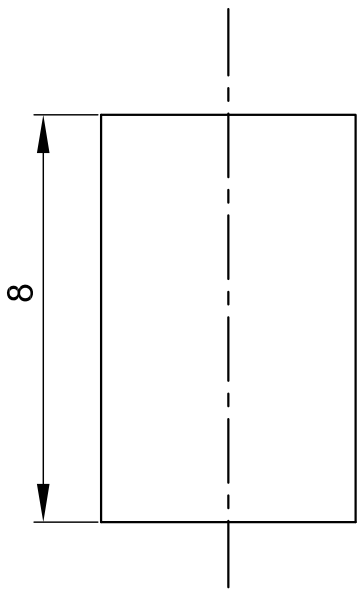

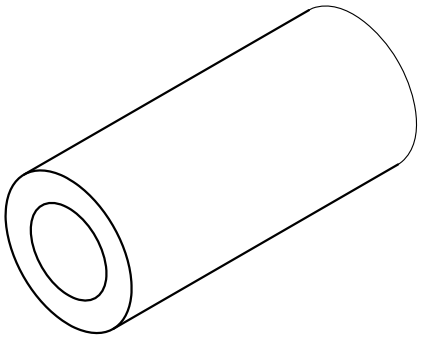

NOTE:
AVOID SHARP EDGES AND CORNERS

REV	CN.NO.	DATE	DESCRIPTION	CHECKED	APPROVED	NEXT ASSEMBLY	ITEM	QTY
4								
3								
2								
1								
0		24.08.19	ORIGINAL			DSA 36 109 0 012	24	4

MATERIAL	FINISH	PROJ.		PRJ.
NYLON	-		TOL.GEN. ± IS:2102 TOL.AXIS. ± (MED)	109

DRAWN	CHECKED	APPROVED	DIMNS	SCALE	TITLE
MALIKSAD			mm	NTS	8MM NYLON SPACER
DATE 24.08.19	DATE	DATE			

KERALA STATE ELECTRONICS DEVELOPMENT CORPORATION LIMITED.

DRG. NUMBER: DPD 36 109 0 182

SIZE	ISSUE
A4	1
NO.OF SHEETS	1 / 1

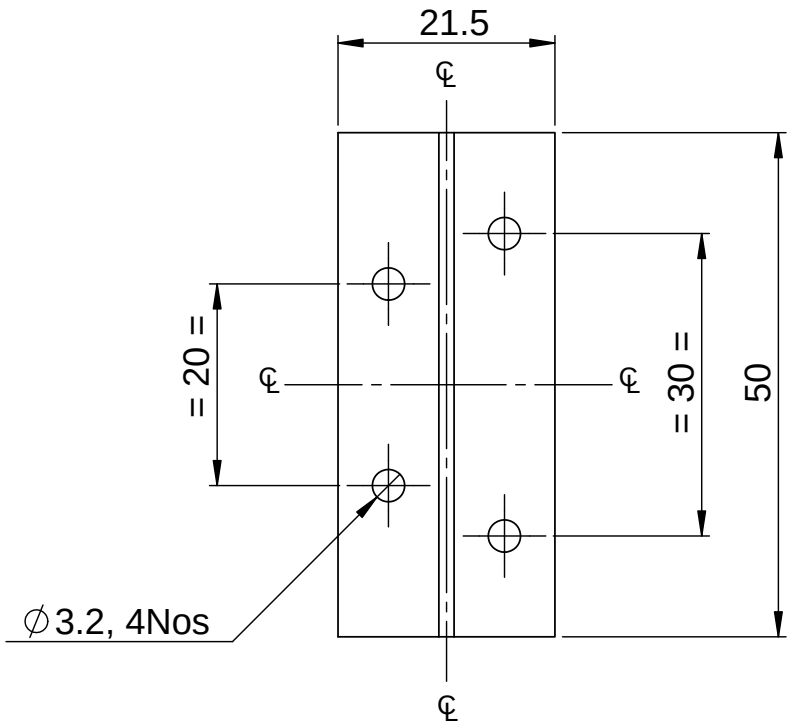

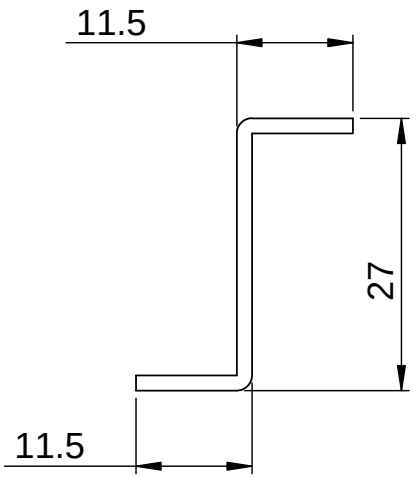

REV	CN.NO.	DATE	DESCRIPTION	CHECKED	APPROVED	NEXT ASSEMBLY	ITEM	QTY
4								
3								
2								
1								
0		08.11.16	ORIGINAL					

MATERIAL	FINISH	PROJ.	TOL.GEN. ± IS:2102 TOL.AXIS. ± (MED)	PRJ.
1.5 mm ALUMINIUM SHEET	YELLOW CC COATING			109

DRAWN	CHECKED	APPROVED	DIMNS	SCALE	TITLE
MALIKSAD			mm	NTS	CLAMP FOR ACH

DATE 08.11.16	DATE	DATE	DRG. NUMBER	SIZE	ISSUE
KERALA STATE ELECTRONICS DEVELOPMENT CORPORATION LIMITED.			DPD 36 109 0 221	A4	1
				NO.OF SHEETS	1 / 1

RESTRICTED

RESTRICTED

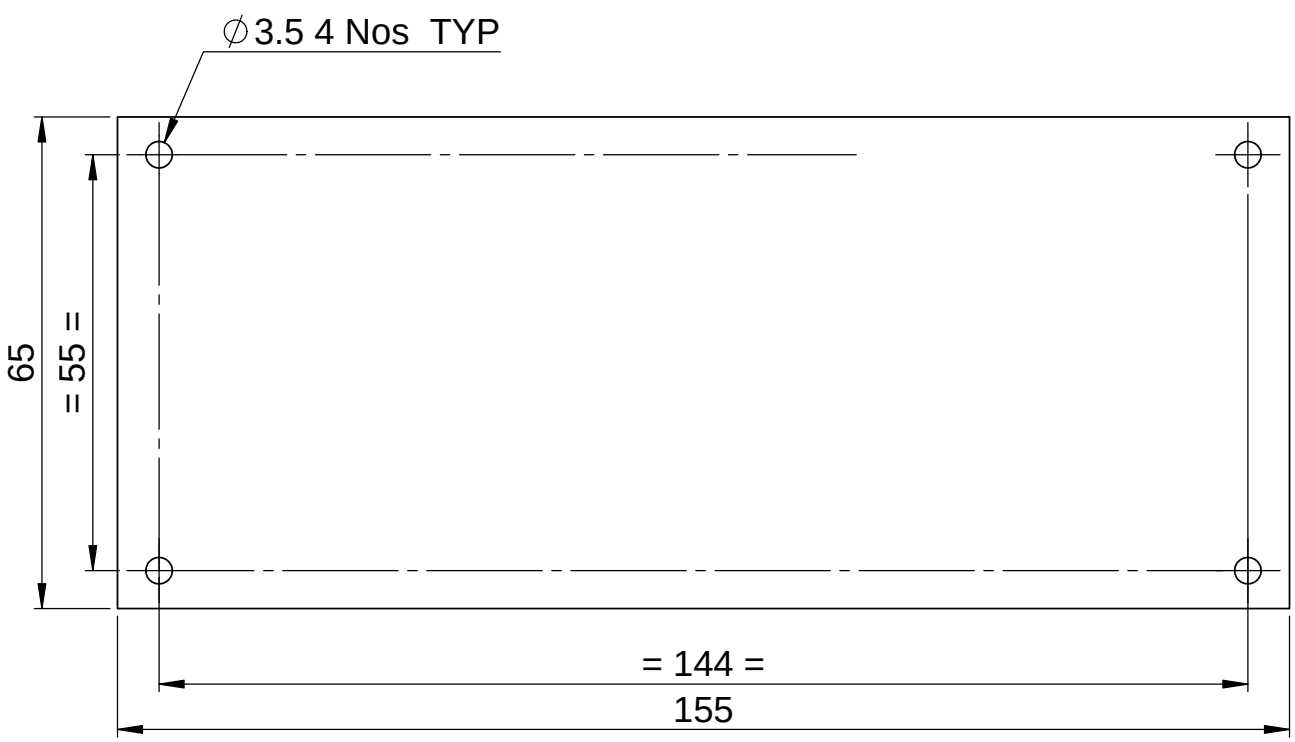

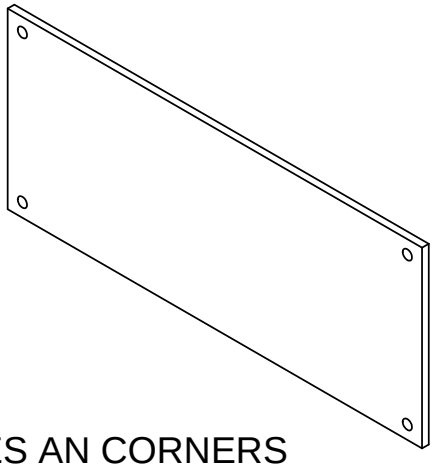

NOTE

AVOID SHARP EDGES AN CORNERS

REV	CN.NO.	DATE	DESCRIPTION	CHECKED	APPROVED	NEXT ASSEMBLY	ITEM	QTY
4								
3								
2								
1								
0		29.07.17	ORIGINAL			DSA 36 109 0 011	9	1

MATERIAL	FINISH	PROJ.		PRJ.
2.5 mm ACRYLIC SHEET	--		TOL.GEN. ± IS: 2102 TOL.AXIS. ± (MED.)	109

DRAWN	CHECKED	APPROVED	DIMNS	SCALE	TITLE
MALIKSAD			mm	NTS	ACRYLIC SHEET
DATE 29.07.17	DATE	DATE	DRG. NUMBER		SIZE / ISSUE
KERALA STATE ELECTRONICS DEVELOPMENT CORPORATION LIMITED			DPD 36 109 0 065		A4 / 1
					NO.OF SHEETS 1 / 1

RESTRICTED

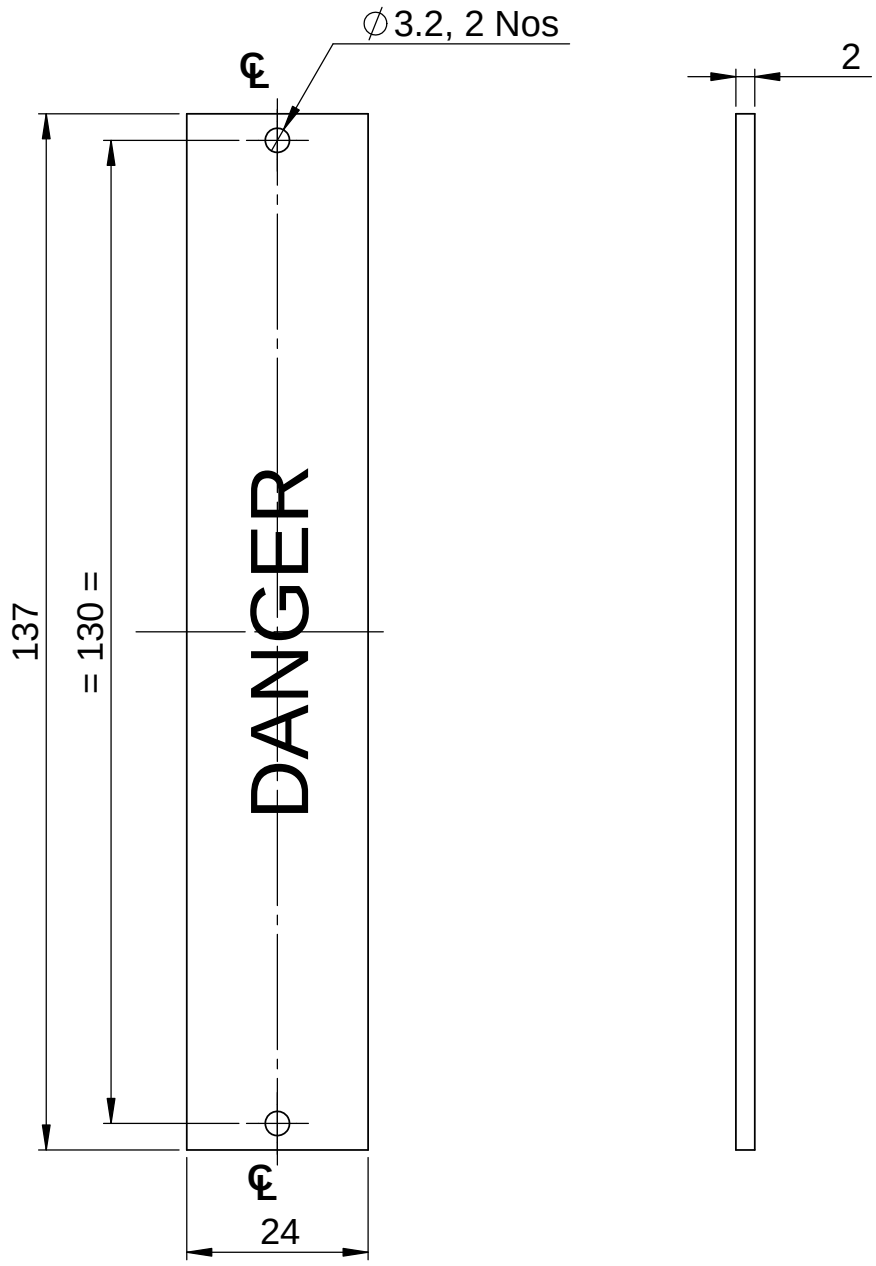

NOTE

1. 8mm HEIGHT TEXT TO BE ENGRAVED,FILLED WITH RED COLOUR PAINT AND ALIGNED TO CENTRE
2. AVOID SHARP CORNERS AND EDGES

1

REV	CN.NO.	DATE	DESCRIPTION	CHECKED	APPROVED	NEXT ASSEMBLY	ITEM	QTY
4								
3								
2								
1		22.08.19	REVISED					
0		01.08.16	ORIGINAL			DSA 36 109 0 017	6	2

MATERIAL: 2 mm ACRYLIC SHEET	FINISH: -------	PROJ.	TOL.GEN. ± IS: 2102 TOL.AXIS. ± (MED.)	PRJ. 109	
DRAWN: MALIKSAD	CHECKED	APPROVED	DIMNS: mm / SCALE: NTS	TITLE: ACRYLIC SHEET-TB	
DATE: 22.08.19	DATE	DATE	DRG. NUMBER: DPD 36 109 0 086	SIZE: A4	ISSUE: 1
KERALA STATE ELECTRONICS DEVELOPMENT CORPORATION LIMITED				NO.OF SHEETS: 1 / 1	

RESTRICTED

RESTRICTED

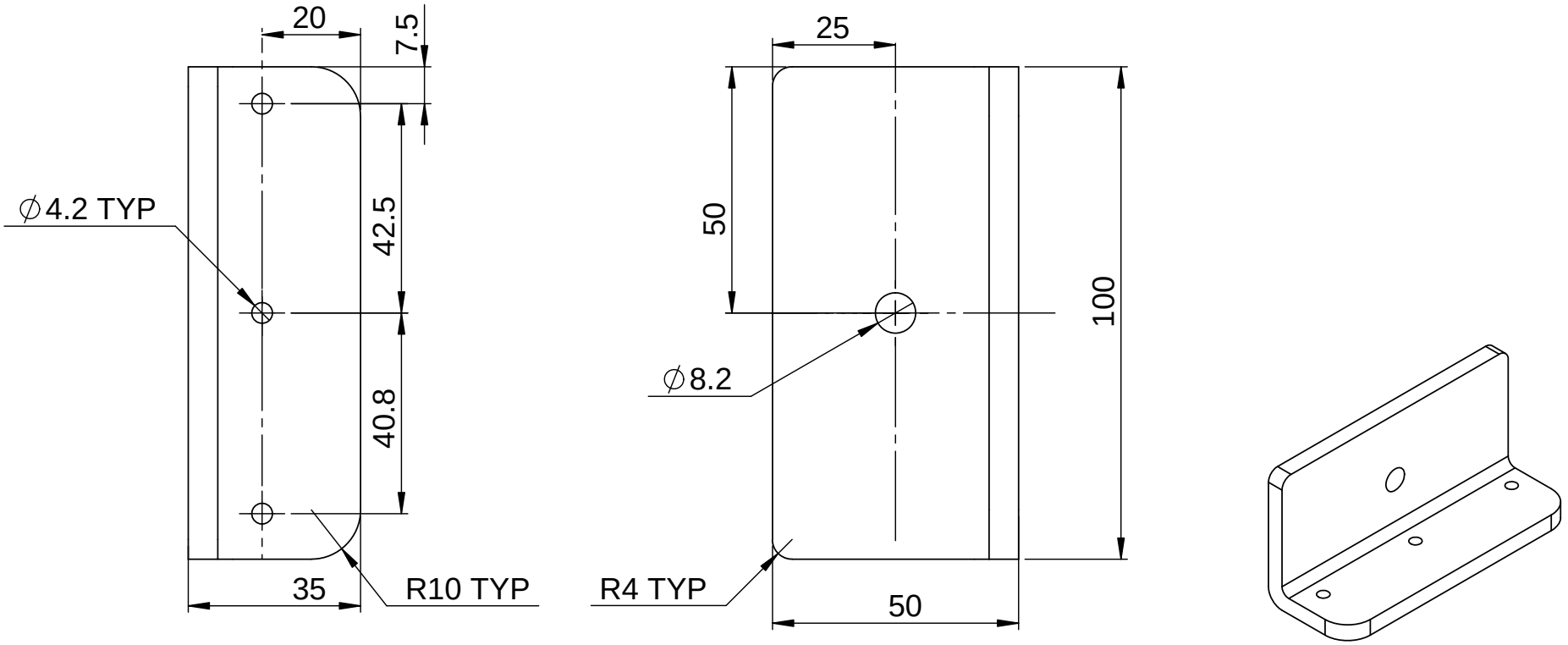

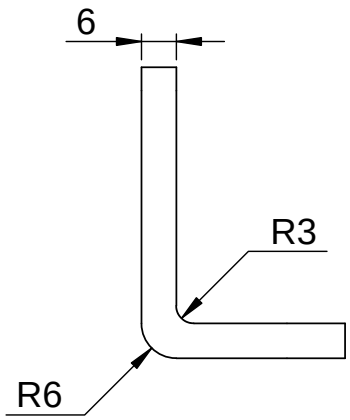

4								
3								
2								
1								
0		24.09.16	ORIGINAL			XXXX	XX	XX
REV	CN.NO.	DATE	DESCRIPTION	CHECKED	APPROVED	NEXT ASSEMBLY	ITEM	QTY

MATERIAL: ALUMINIUM-HE30	FINISH:	PROJ.	TOL.GEN. ± IS: 2102 TOL.AXIS. ± (MED.)	PRJ. 109	
DRAWN: MALIKSAD	CHECKED	APPROVED	DIMNS: mm / SCALE: NTS	TITLE: AKCC FIXING L ANGLE-L	
DATE 24.09.16	DATE	DATE	DRG. NUMBER: DPD 36 109 0	SIZE: A4	ISSUE: 1
KERALA STATE ELECTRONICS DEVELOPMENT CORPORATION LIMITED				NO.OF SHEETS: 1 / 1	

RESTRICTED

RESTRICTED

DEVIATION FOR NON - TOLERANCED DIMENSIONS (IS : 2102 - MEDIUM)											
ABOVE	0.5	6	30	120	315	1000	LENGTH IN mm OF SHORTER SIDE OF ANGLE				
UP TO	6	30	120	315	1000	2000	ABOVE & UP TO	0.5 - 6	6 - 30	30 - 120	120 - 400
TOL.	±0.1	±0.2	±0.3	±0.5	±0.8	±1.2	TOL.	± 1°	± 30'	± 20'	± 10'

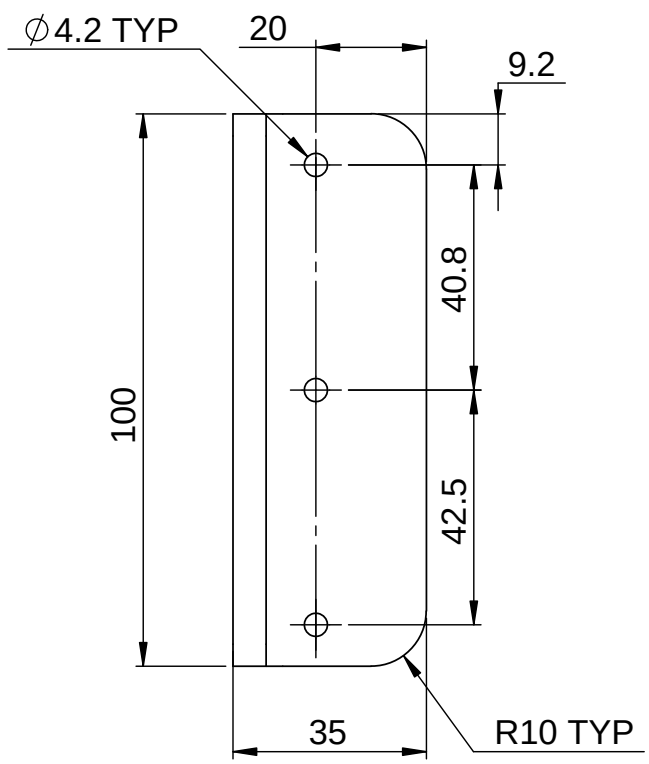

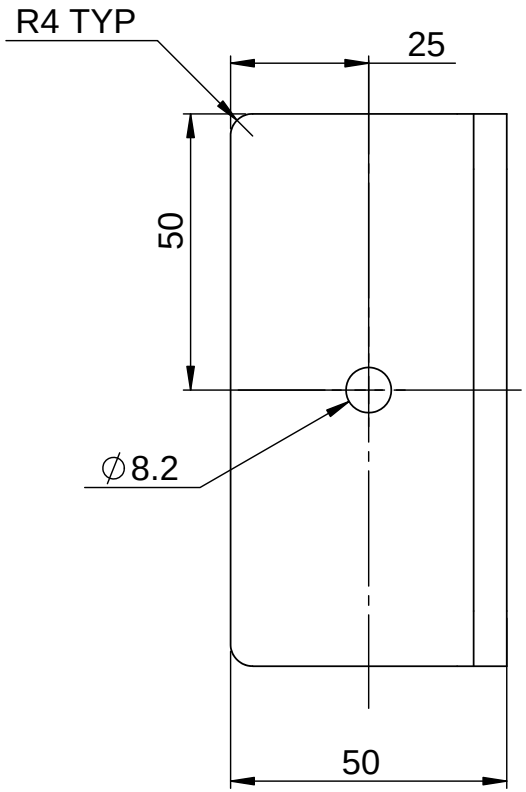

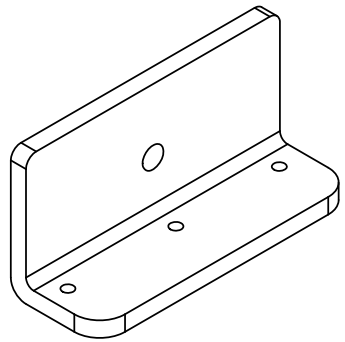

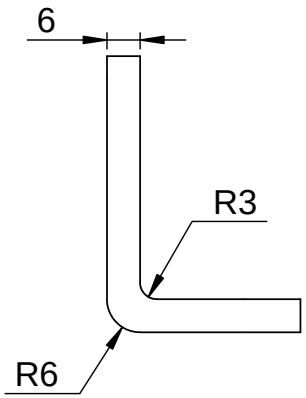

REV	CN.NO.	DATE	DESCRIPTION	CHECKED	APPROVED	NEXT ASSEMBLY	ITEM	QTY
4								
3								
2								
1								
0		XXXX	ORIGINAL			XXXX	XX	XX

MATERIAL	FINISH	PROJ.	TOL.GEN. ± IS: 2102 TOL.AXIS. ± (MED.)	PRJ.
XXXX	XXXX			109

DRAWN	CHECKED	APPROVED	DIMNS	SCALE	TITLE
XXXX	XXXX	XXXX	mm	NTS	AKCC FIXING L- ANGLE-R

DATE XXXX	DATE	DATE	DRG. NUMBER	SIZE	ISSUE
KERALA STATE ELECTRONICS DEVELOPMENT CORPORATION LIMITED			XXXXXX	A4	1
				NO.OF SHEETS	1 / 1

RESTRICTED

RESTRICTED

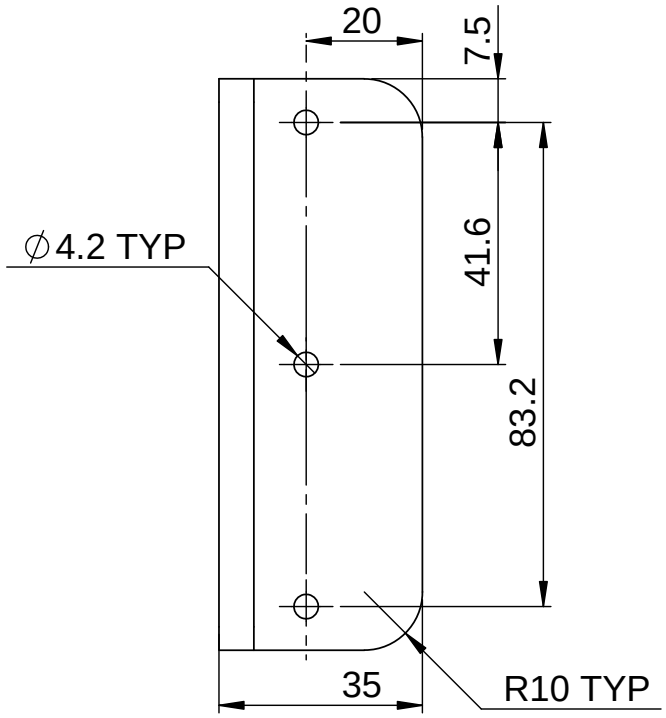

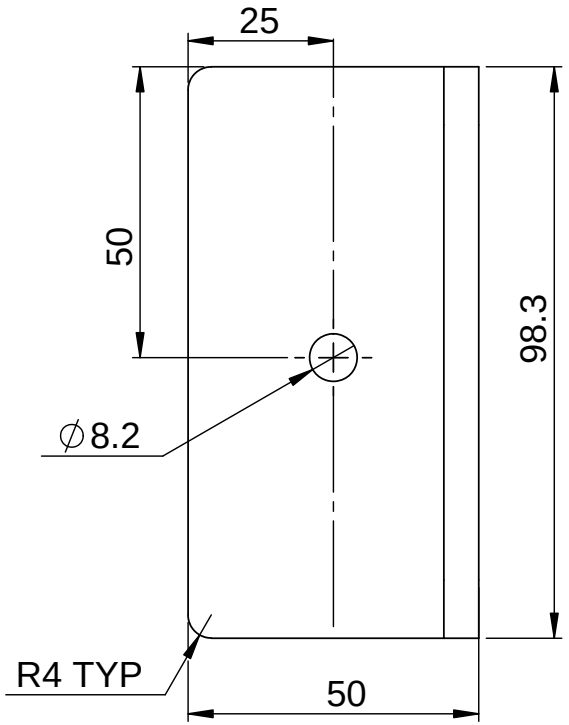

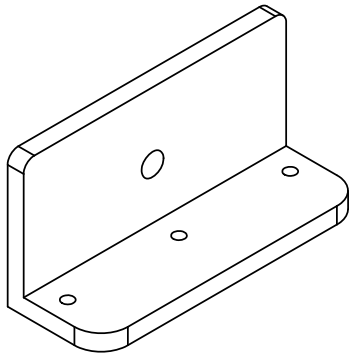

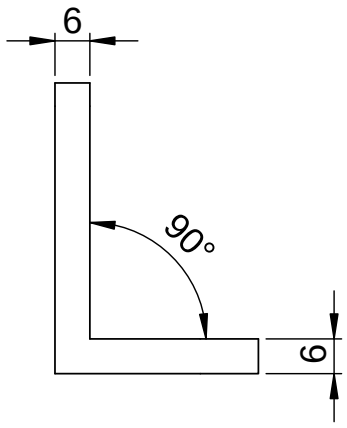

REV	CN.NO.	DATE	DESCRIPTION	CHECKED	APPROVED	NEXT ASSEMBLY	ITEM	QTY
4								
3								
2								
1								
0		24.09.16	ORIGINAL			DSA 36 109 0 023	2	1

MATERIAL	FINISH	PROJ.	TOL.GEN. ± IS: 2102 TOL.AXIS. ± (MED.)	PRJ.
ALUMINIUM-HE30	YELLOW CC COATING			109

DRAWN	CHECKED	APPROVED	DIMNS	SCALE	TITLE
MALIKSAD			mm	NTS	AKCC FIXING L ANGLE
DATE 24.09.16	DATE	DATE	DRG. NUMBER		SIZE: A4 / ISSUE: 1
KERALA STATE ELECTRONICS DEVELOPMENT CORPORATION LIMITED			DPD 36 109 0 125		NO.OF SHEETS: 1 / 1

RESTRICTED

RESTRICTED

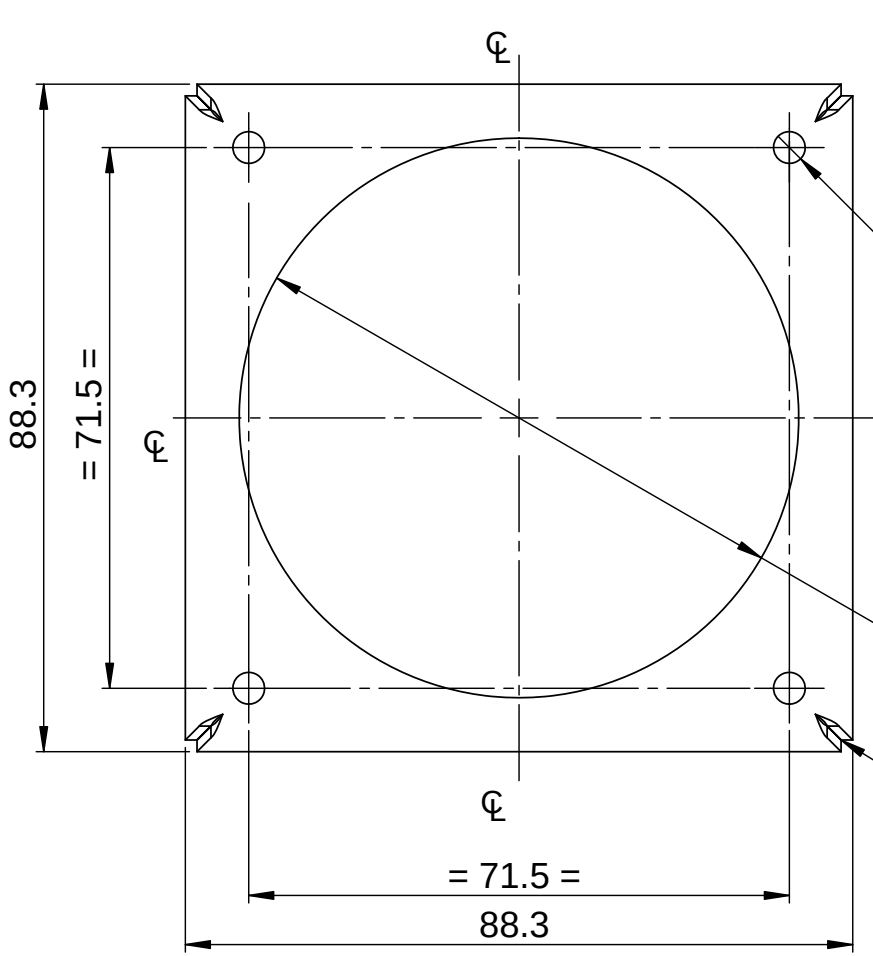

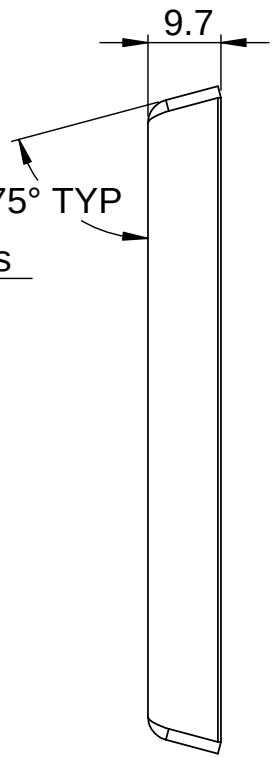

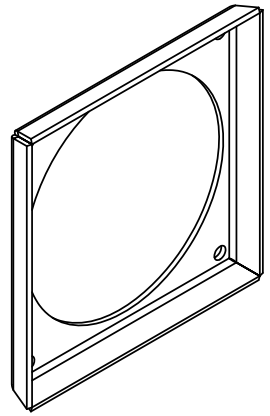

∅4.2 , 4 Nos

∅74 △1

ALL CORNERS TO BE WELDED AND GRIND SMOOTH

NOTE:

1. AVOID SHARP EDGES AND CORNERS
2. ALL BURRS MUST BE REMOVED

REV	CN.NO.	DATE	DESCRIPTION	CHECKED	APPROVED	NEXT ASSEMBLY	ITEM	QTY
4								
3								
2								
△1		21.08.19	REVISED					
0		24.09.17	ORIGINAL			DSA 36 109 0 055	1	1

MATERIAL	FINISH	PROJ.		PRJ.
2 mm ALUMINIUM H32-5052	YELLOW CC COATING		TOL.GEN. ± IS: 2102 TOL.AXIS. ± (MED.)	109

DRAWN	CHECKED	APPROVED	DIMNS	SCALE	TITLE
MALIKSAD			mm	NTS	BAFFLE PLATE
DATE 21.08.19	DATE	DATE	DRG. NUMBER		SIZE: A4 · ISSUE: 1
KERALA STATE ELECTRONICS DEVELOPMENT CORPORATION LIMITED			DPD 36 109 0 055		NO.OF SHEETS: 1 / 1

RESTRICTED

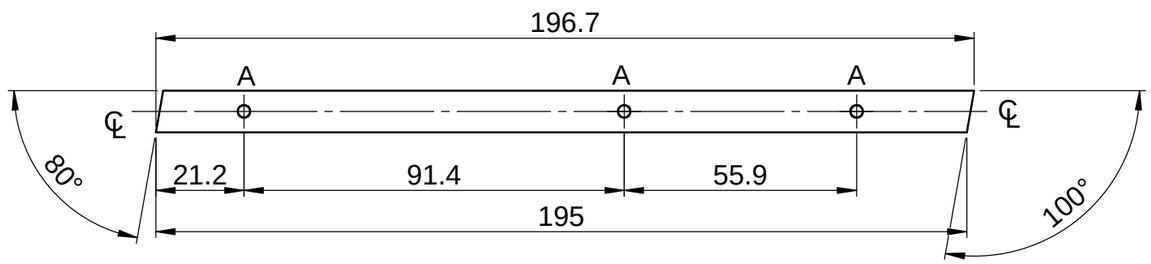

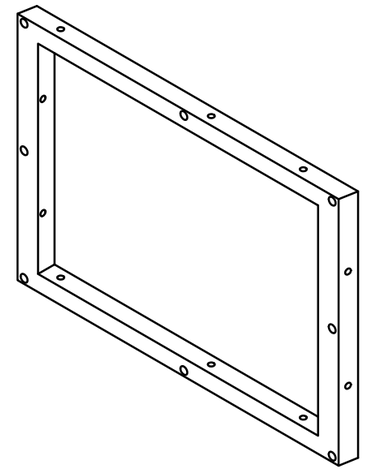

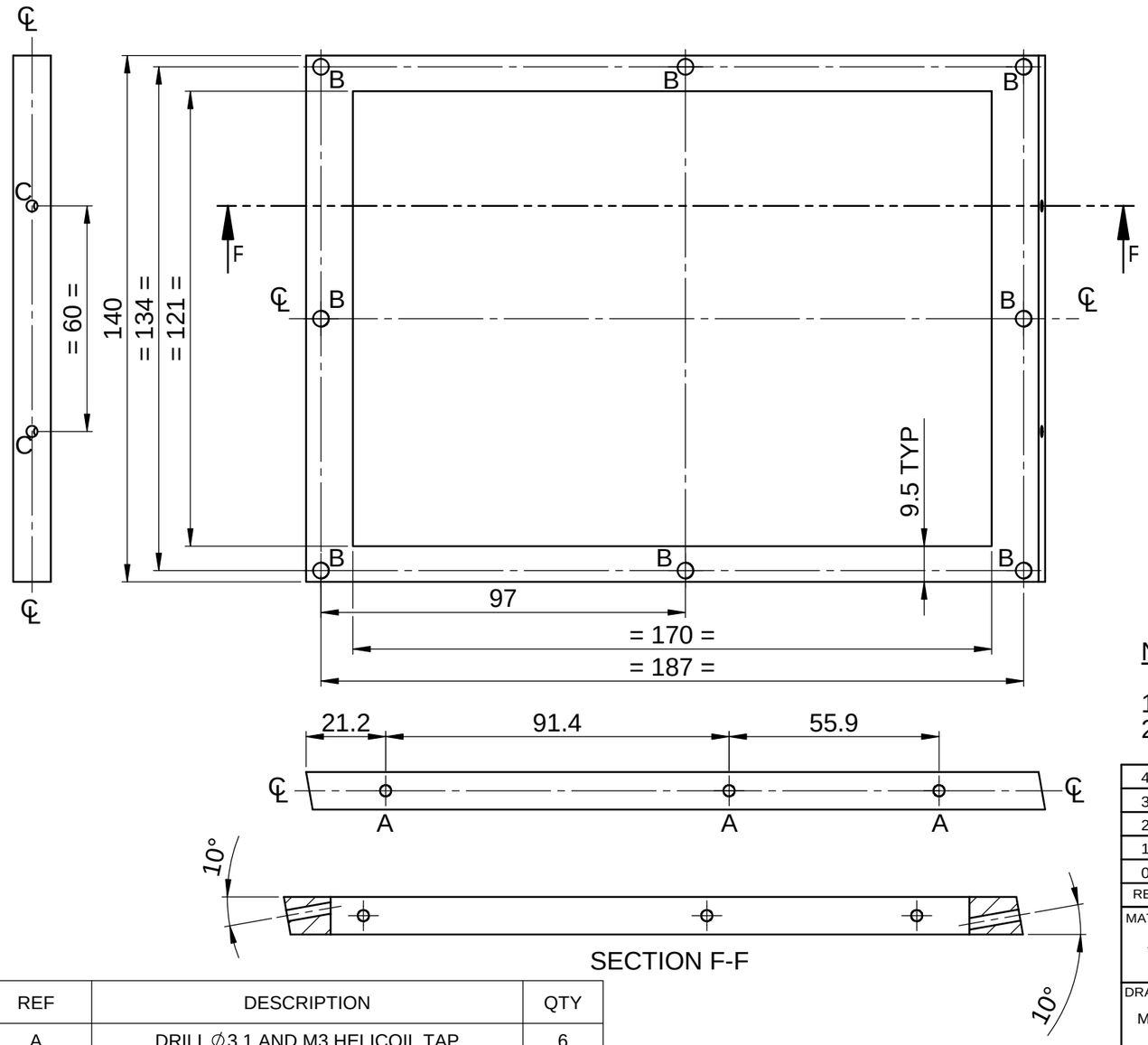

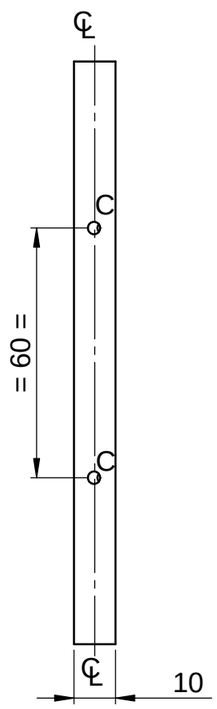

SECTION F-F

SL NO.	REF	DESCRIPTION	QTY
1	A	DRILL ∅3.1 AND M3 HELICOIL TAP	6
2	B	DRILL ∅4.1, ↧9MM AND M4 HELICOIL TAP	8
3	C	DRILL ∅3.1 AND M3 HELICOIL TAP	4

NOTE

1. AVOID SHARP CORNERS AND EDGES
2. ALL BURRS MUST BE REMOVED

REV	CN.NO.	DATE	DESCRIPTION	CHECKED	APPROVED	NEXT ASSEMBLY	ITEM	QTY
4								
3								
2								
1								
0		19.08.16	ORIGINAL			DSA 36 109 0 018	10	1

MATERIAL: ALUMINIUM-HE30	FINISH: YELLOW CC COATING	PROJ.	TOL.GEN. ± IS:2102 TOL.AXIS. ± (MED)	PRJ. 109	
DRAWN: MALIKSAD	CHECKED	APPROVED	DIMNS: mm	SCALE: NTS	TITLE: BAR TOP FAN FIXING
DATE 19.08.16	DATE	DATE	DRG. NUMBER: DPD 36 109 0 077	SIZE: A3	ISSUE: 1
KERALA STATE ELECTRONICS DEVELOPMENT CORPORATION LIMITED.				NO.OF SHEETS: 1 / 1	

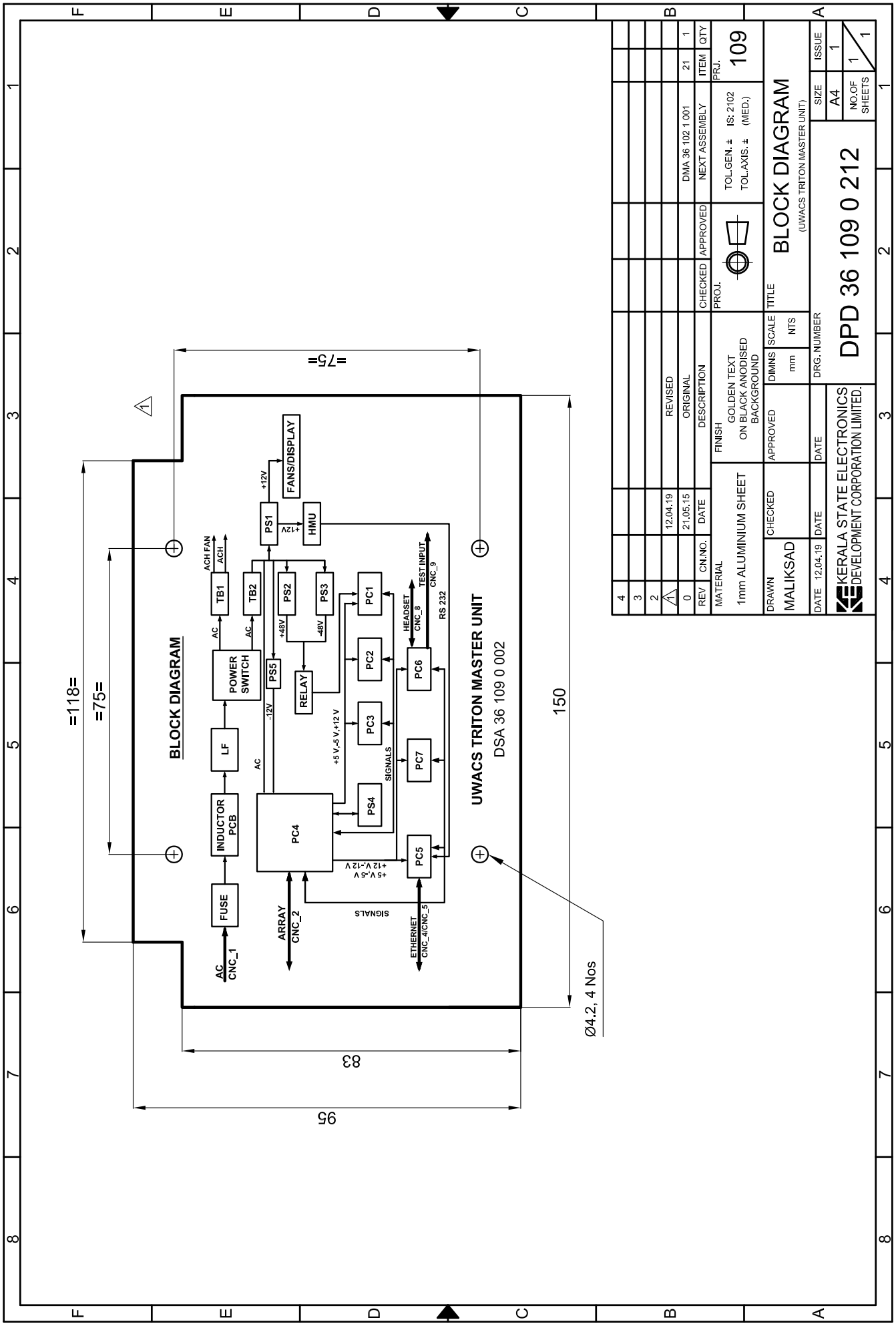

REV	CN.NO.	DATE	DESCRIPTION
4			
3			
2			
1		12.04.19	REVISED
0		21.05.15	ORIGINAL

ITEM	QTY	NEXT ASSEMBLY
21	1	DMA 36 102 1 001

CHECKED	APPROVED	PRJ.
		109

TOL.GEN. ± IS: 2102
TOL.AXIS. ± (MED.)

MATERIAL: 1mm ALUMINIUM SHEET
FINISH: GOLDEN TEXT ON BLACK ANODISED BACKGROUND

DRAWN	CHECKED	APPROVED	DIMNS	SCALE
MALIKSAD			mm	NTS
DATE 12.04.19	DATE	DATE	DRG. NUMBER	

TITLE: BLOCK DIAGRAM
(UWACS TRITON MASTER UNIT)

KERALA STATE ELECTRONICS DEVELOPMENT CORPORATION LIMITED.

DPD 36 109 0 212

SIZE: A4 | ISSUE: 1 | NO.OF SHEETS: 1 / 1

RESTRICTED

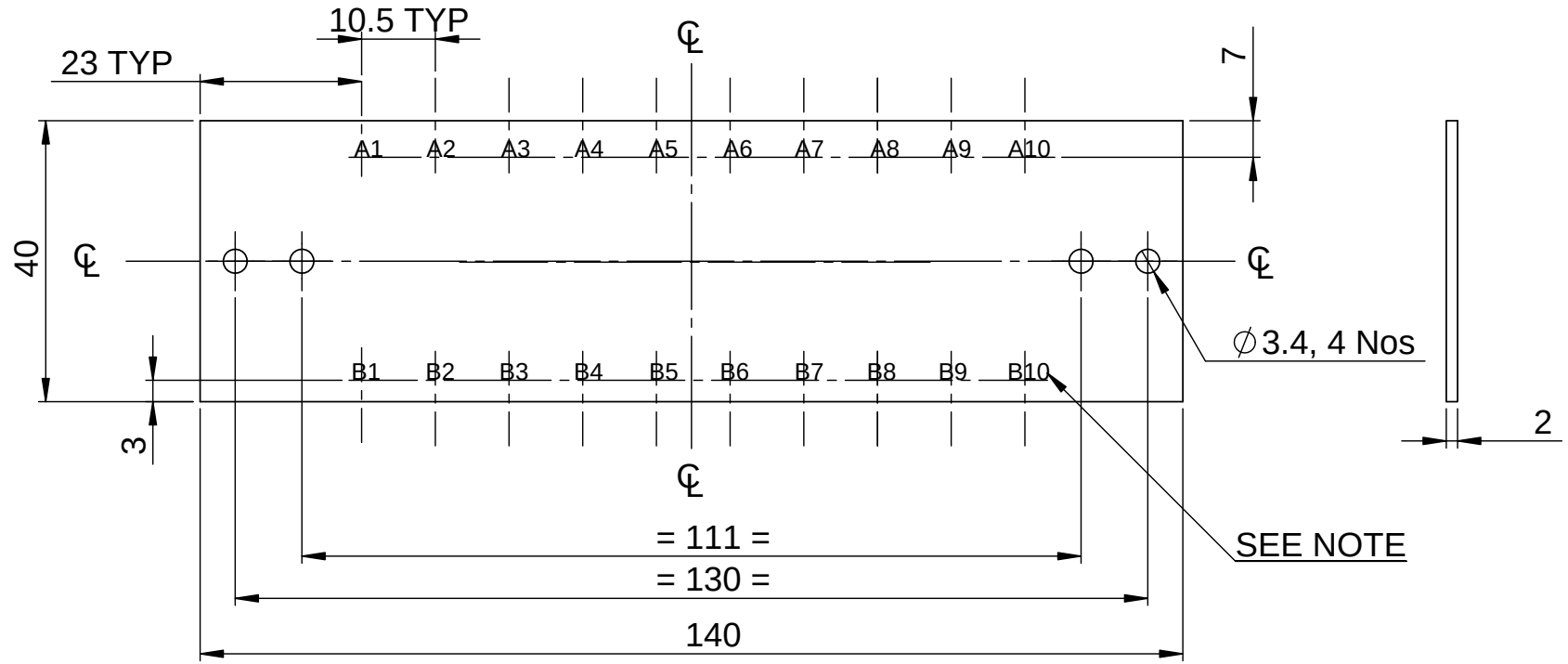

NOTE

1. AVOID SHARP CORNERS AND EDGES
2. 2.5mm HEIGHT TEXT TO BE ENGRAVED, FILLED WITH BLACK COLOUR AND CENTRALISED TO CORRESPONDING LINES

1

REV	CN.NO.	DATE	DESCRIPTION	CHECKED	APPROVED	NEXT ASSEMBLY	ITEM	QTY
4								
3								
2								
1		22.08.19	REVISED					
0		09.11.16	ORIGINAL			DSA 36 109 0 017	21	02

MATERIAL	FINISH	PROJ.	TOL.GEN. ± IS: 2102 TOL.AXIS. ± (MED.)	PRJ.
2 mm ACRYLIC SHEET	.....			109

DRAWN	CHECKED	APPROVED	DIMNS	SCALE	TITLE
MALIKSAD			mm	NTS	BOTTOM ACRYLIC SHEET FOR TB
DATE 22.08.19	DATE	DATE	DRG. NUMBER		SIZE A4 / ISSUE 1

KERALA STATE ELECTRONICS DEVELOPMENT CORPORATION LIMITED

DPD 36 109 0 222

NO.OF SHEETS 1 / 1

RESTRICTED

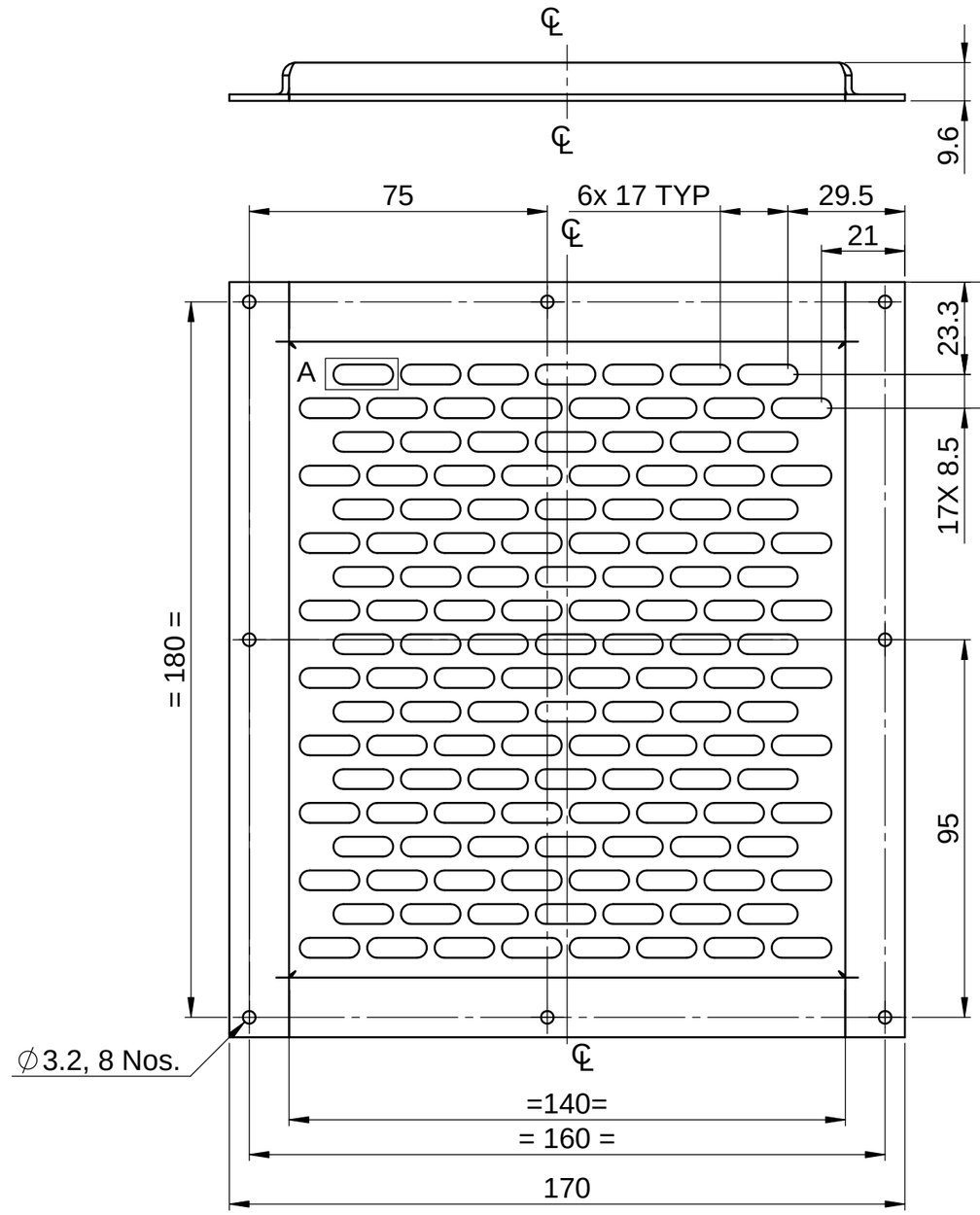

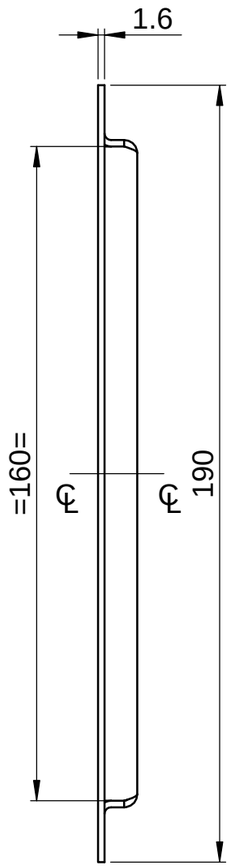

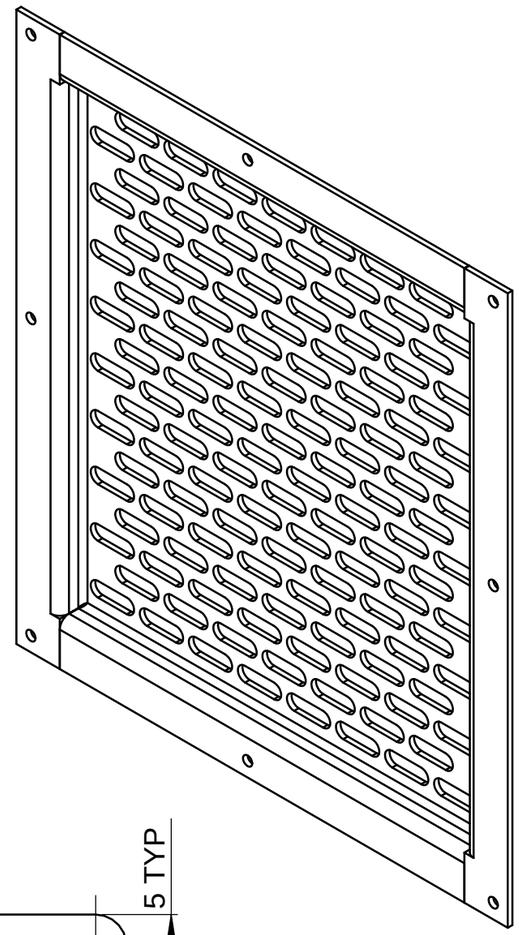

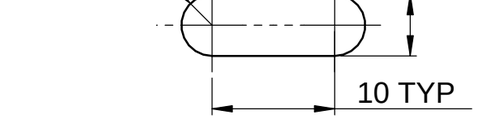

DETAIL A

NOTE

1. AVOID SHARP CORNERS AND EDGES

REV	CN.NO.	DATE	DESCRIPTION	CHECKED	APPROVED	NEXT ASSEMBLY	ITEM	QTY
4								
3								
2								
1								
0		19.08.17	ORIGINAL			DSA 36 109 0 014	2	1

MATERIAL: ALUMINIUM H32-5052	FINISH: YELLOW CC COATING	PROJ.	TOL.GEN. ± IS:2102 TOL.AXIS. ± (MED)	PRJ. 109	
DRAWN: MALIKSAD	CHECKED	APPROVED	DIMNS: mm / SCALE: NTS	TITLE: BOTTOM HONEY COMB BRACKET	
DATE 19.08.17	DATE	DATE	DRG. NUMBER: DPD 36 109 0 126	SIZE: A3	ISSUE: 1
KERALA STATE ELECTRONICS DEVELOPMENT CORPORATION LIMITED				NO.OF SHEETS: 1 / 1	

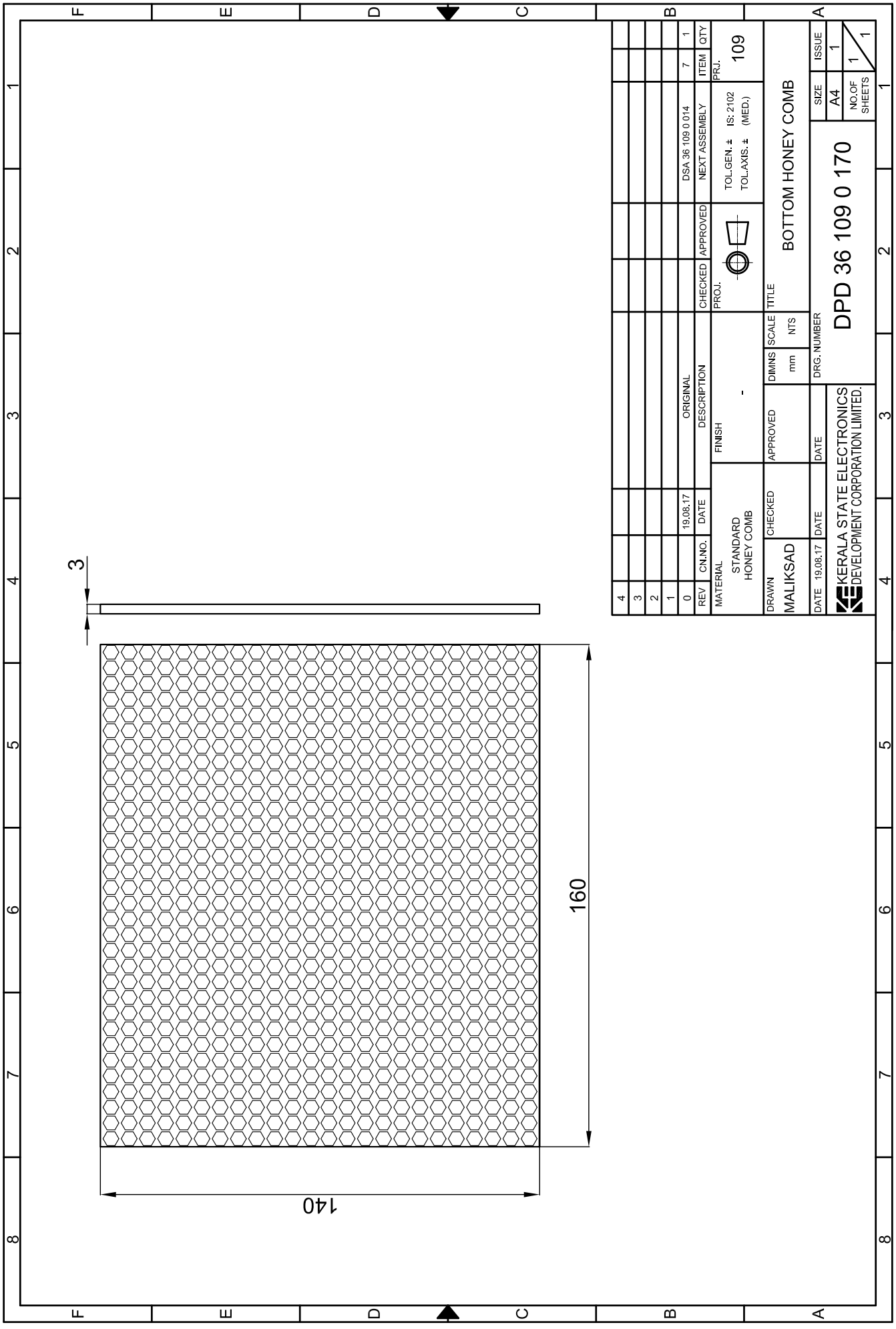
3
160
140
4
3
2
1
0
REV
CN.NO.
DATE
19.08.17
ORIGINAL
DESCRIPTION
CHECKED
APPROVED
DSA 36 109 0 014
7
ITEM
NEXT ASSEMBLY
QTY
1
PRJ.
109
TOL.GEN. ± IS: 2102
TOL.AXIS. ± (MED.)
PROJ.
MATERIAL
STANDARD
HONEY COMB
FINISH
-
TITLE
BOTTOM HONEY COMB
DRAWN
MALIKSAD
DATE 19.08.17
CHECKED
DATE
APPROVED
DATE
DIMNS
mm
SCALE
NTS
DRG. NUMBER
DPD 36 109 0 170
SIZE
A4
ISSUE
1
NO.OF SHEETS
1
1
KERALA STATE ELECTRONICS
DEVELOPMENT CORPORATION LIMITED.

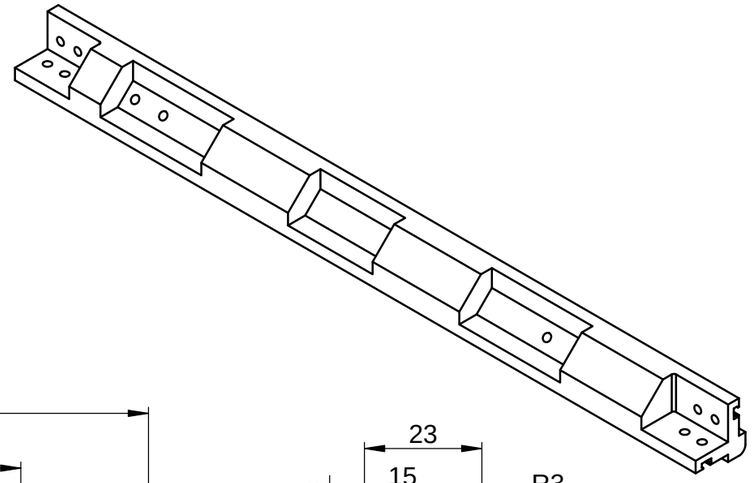

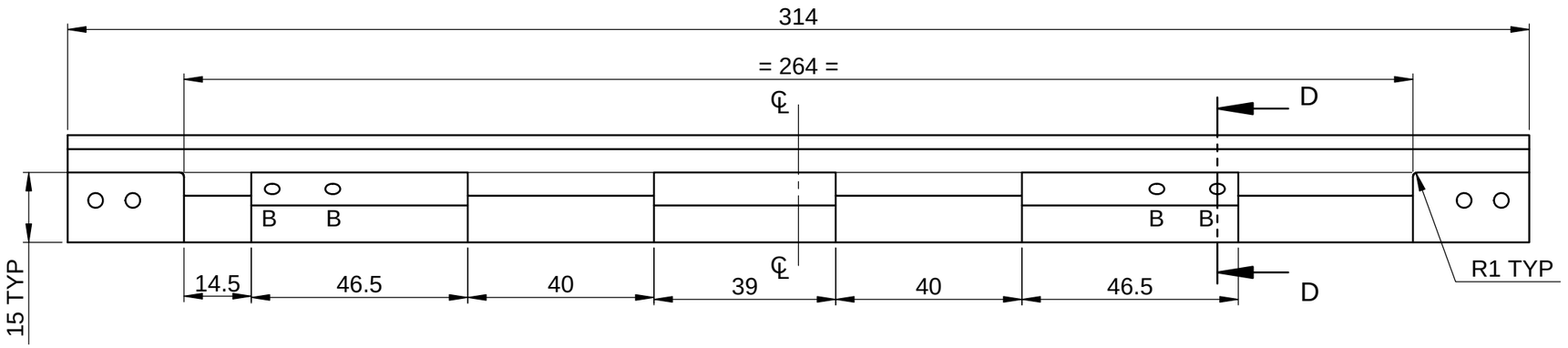

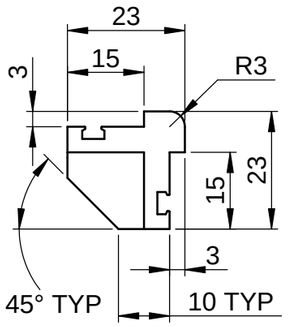

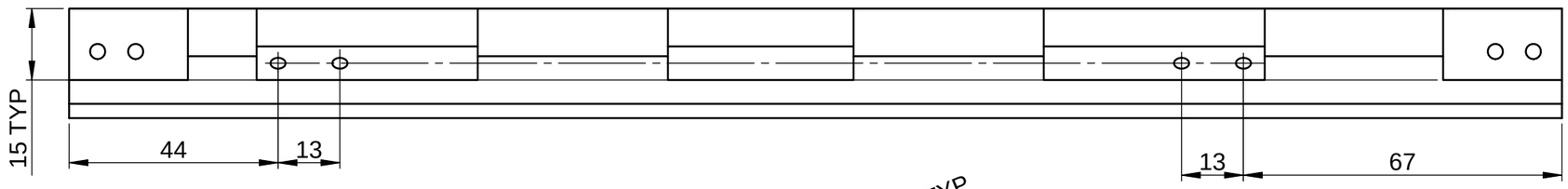

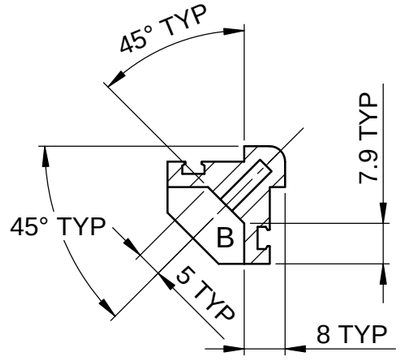

SECTION D-D

NOTE

1. AVOID SHARP CORNERS AND EDGES
2. ALL BURRS MUST BE REMOVED

SL NO	REF	DESCRIPTION	QTY
1	A	DRILL ⌀3.2 ⌴ ⌀6.2, ↧2.4	8
2	B	DRILL ⌀3.1, ↧10 AND M3 HELICOIL TAP	4
3	C	DRILL ⌀4.1, ↧10 AND M4 HELICOIL TAP	7

REV	CN.NO.	DATE	DESCRIPTION	CHECKED	APPROVED	NEXT ASSEMBLY	ITEM	QTY
4								
3								
2								
1								
0		19.08.17	ORIGINAL			DSA 36 109 0 020	13	1

MATERIAL: ALUMINIUM HE-30	FINISH: YELLOW CC COATING	PROJ.	TOL.GEN. ± IS:2102 TOL.AXIS. ± (MED)	PRJ. 109	
DRAWN: MALIKSAD	CHECKED	APPROVED	DIMNS: mm	SCALE: NTS	TITLE: BOTTOM LEFT DEPTH FRAME
DATE 19.08.17	DATE	DATE	DRG. NUMBER: DPD 36 109 0 099	SIZE: A3	ISSUE: 1
KERALA STATE ELECTRONICS DEVELOPMENT CORPORATION LIMITED.				NO.OF SHEETS: 1/2	

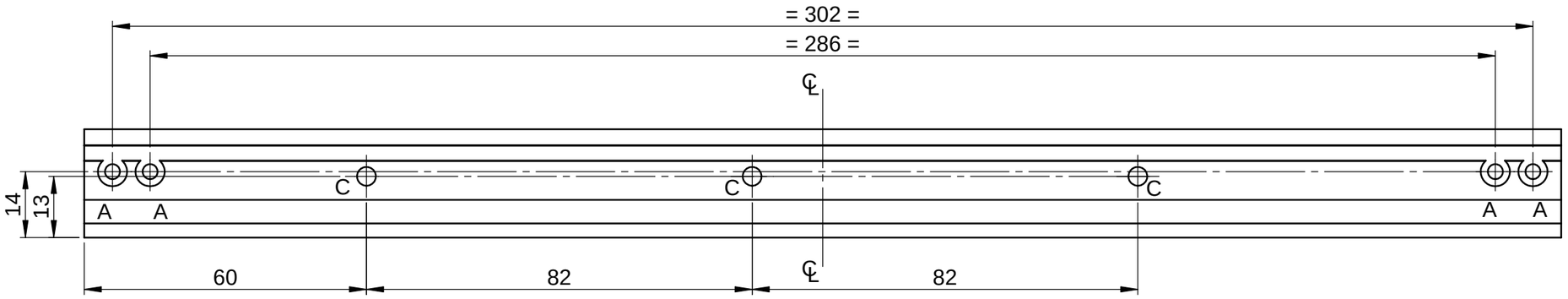

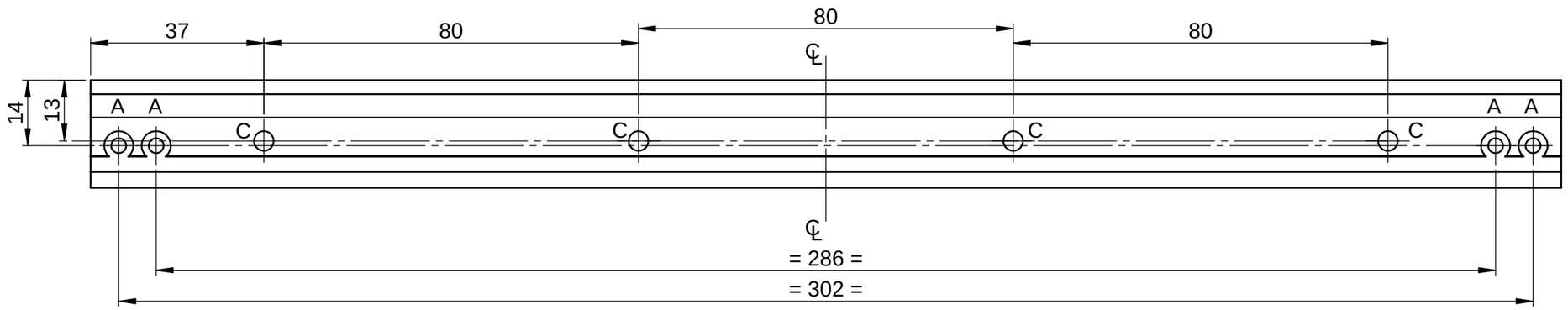

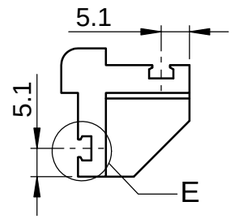

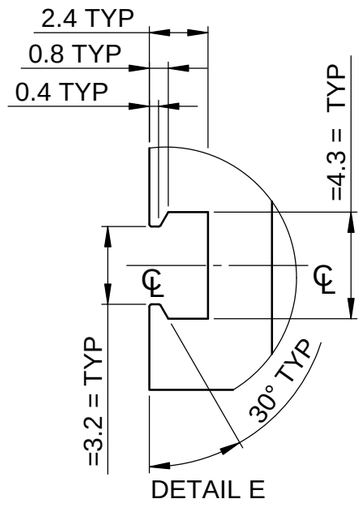

REV	CN.NO.	DATE	DESCRIPTION	CHECKED	APPROVED	NEXT ASSEMBLY	ITEM	QTY
4								
3								
2								
1								
0		19.08.17	ORIGINAL			DSA 36 109 0 020	13	1

MATERIAL: ALUMINIUM HE-30	FINISH: YELLOW CC COATING	PROJ.	TOL.GEN. ± IS:2102 TOL.AXIS. ± (MED)	PRJ. 109	
DRAWN: MALIKSAD	CHECKED	APPROVED	DIMNS: mm / SCALE: NTS	TITLE: BOTTOM LEFT DEPTH FRAME	
DATE 19.08.17	DATE	DATE			
KERALA STATE ELECTRONICS DEVELOPMENT CORPORATION LIMITED.			DRG. NUMBER: DPD 36 109 0 099	SIZE: A3	ISSUE: 1
				NO.OF SHEETS: 2 / 2	

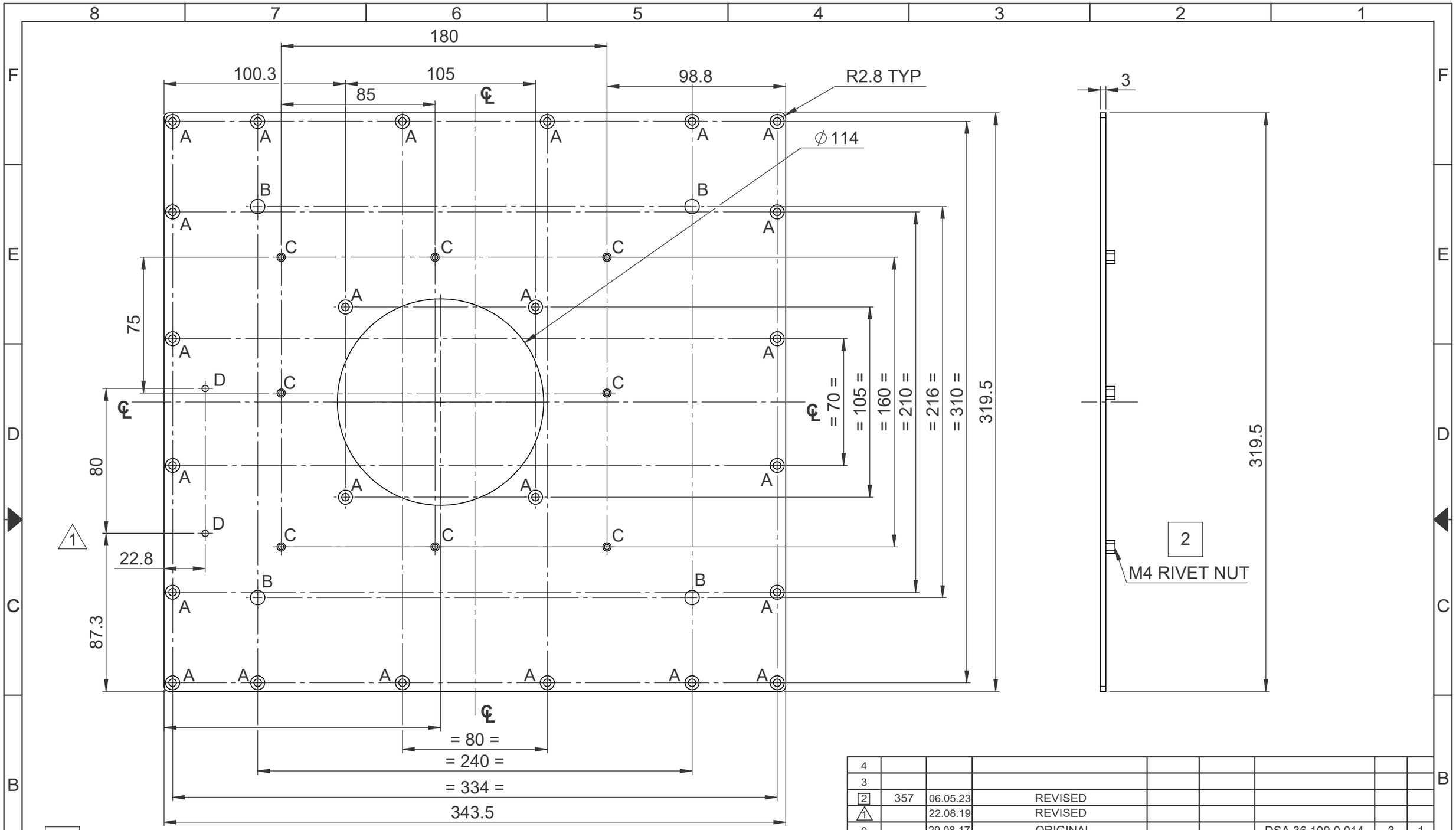

SLNO	REF	DESCRIPTION	QTY
1	A	∅4.2 ⌵ ∅7.8	24
2	B	∅8	4
3	C	M4 RIVET NUT	8
4	D	∅3.5	2

REV	CN.NO.	DATE	DESCRIPTION	CHECKED	APPROVED	NEXT ASSEMBLY	ITEM	QTY
4								
3								
2	357	06.05.23	REVISED					
1		22.08.19	REVISED					
0		29.08.17	ORIGINAL			DSA 36 109 0 014	3	1

MATERIAL	FINISH	PROJ.		PRJ.
ALUMINIUM HE-30	YELLOW CC COATING		TOL.GEN. ± IS:2102 TOL.AXIS. ± (MED)	109

DRAWN	CHECKED	APPROVED	DIMNS	SCALE	TITLE
MALIKSAD			mm	NTS	BOTTOM PLATE
DATE 22.08.19	DATE	DATE			

KERALA STATE ELECTRONICS DEVELOPMENT CORPORATION LIMITED

DRG. NUMBER: DPD 36 109 0 127

SIZE	ISSUE
A3	1
NO.OF SHEETS	1 / 2

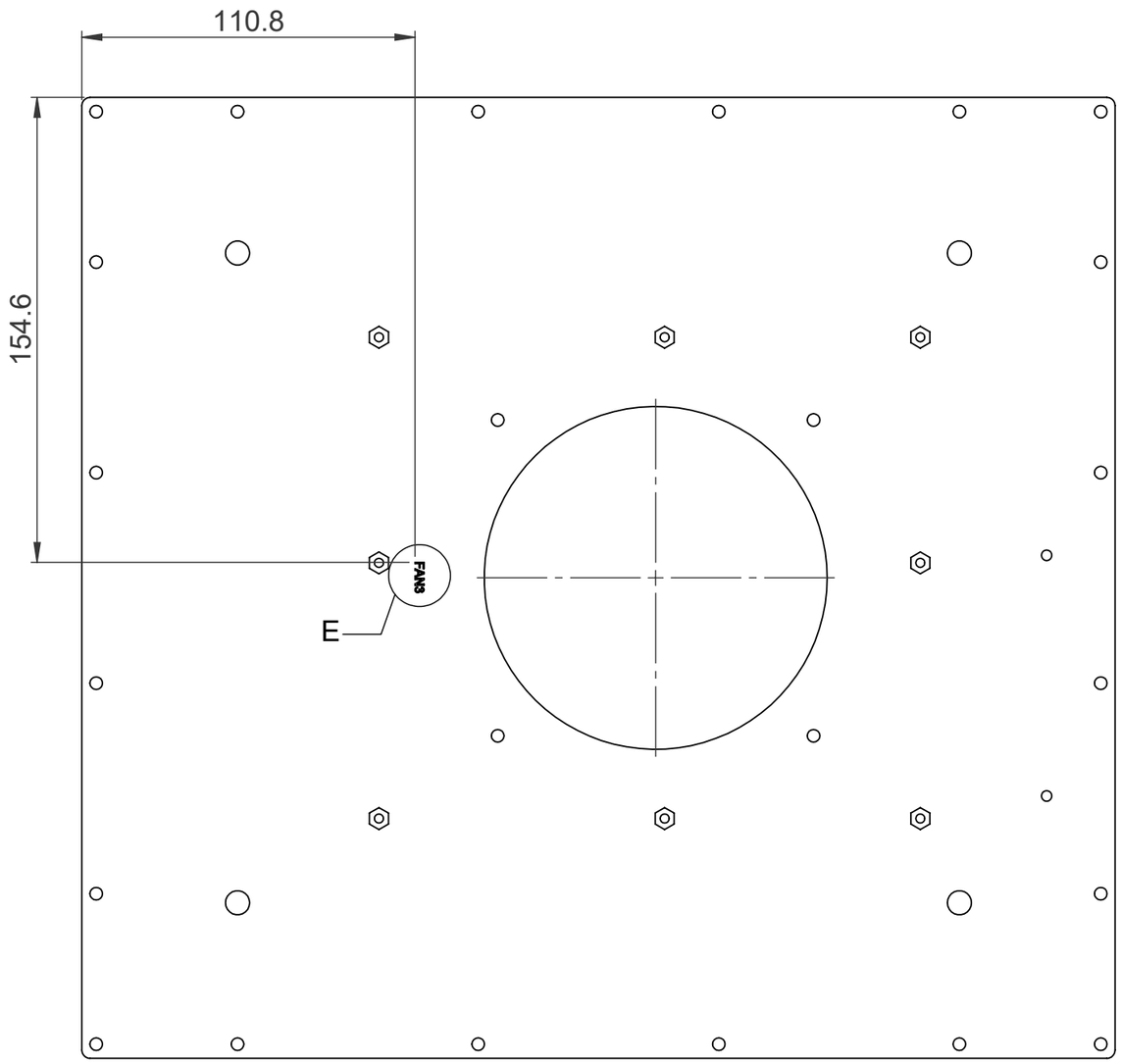

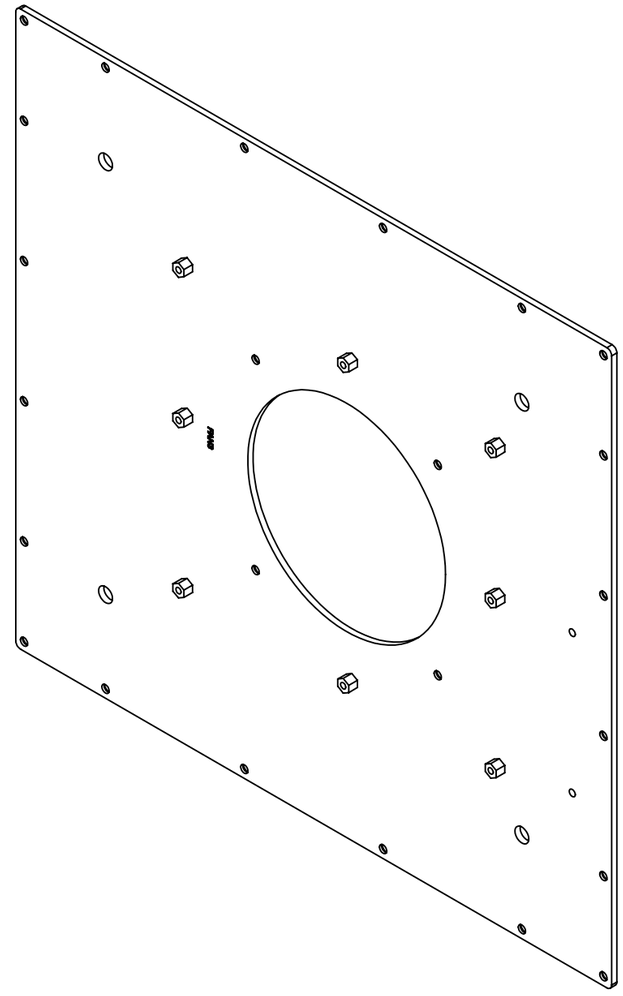

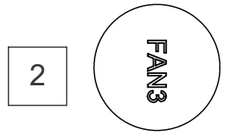

DETAIL E

NOTE:

1. AVOID SHARP EDGES AND CORNERS
2. 3x0.5⇩ TEXT TO BE ENGRAVED AND FILLED WITH BLACK PAINT

REV	CN.NO.	DATE	DESCRIPTION	CHECKED	APPROVED	NEXT ASSEMBLY	ITEM	QTY
4								
3								
2	357	06.05.23	REVISED					
1		22.08.19	REVISED					
0		29.08.17	ORIGINAL			DSA 36 109 0 014	3	1

MATERIAL: ALUMINIUM HE-30	FINISH: YELLOW CC COATING	PROJ.	TOL.GEN. ± IS:2102 TOL.AXIS. ± (MED)	PRJ. 109	
DRAWN: MALIKSAD	CHECKED	APPROVED	DIMNS: mm	SCALE: NTS	TITLE: BOTTOM PLATE
DATE 22.08.19	DATE	DATE	DRG. NUMBER: DPD 36 109 0 127	SIZE: A3	ISSUE: 1
KERALA STATE ELECTRONICS DEVELOPMENT CORPORATION LIMITED				NO.OF SHEETS: 2 / 2	

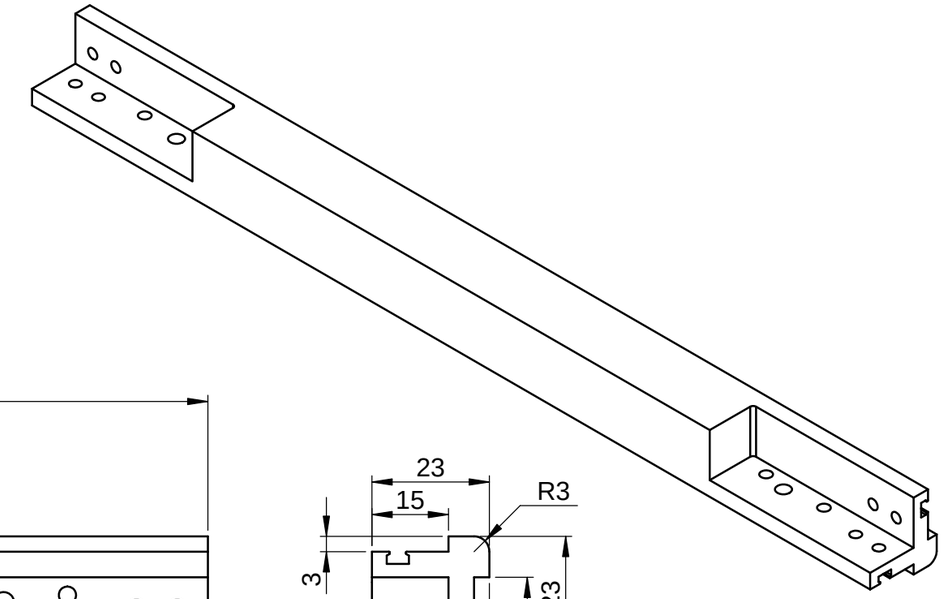

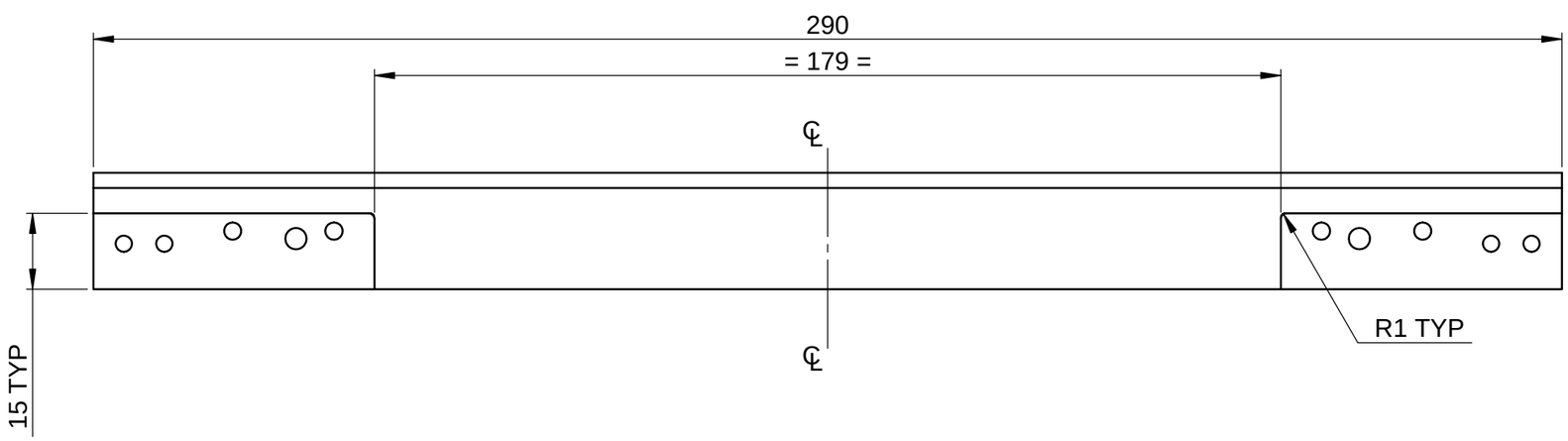

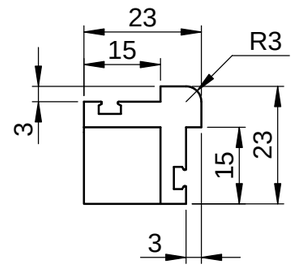

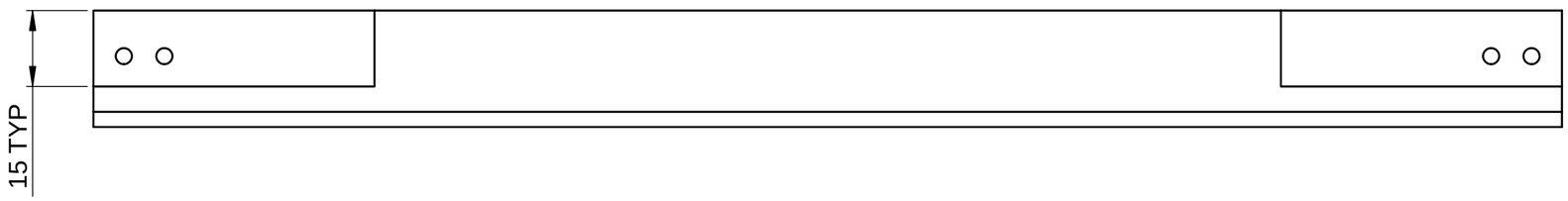

NOTE

1. AVOID SHARP CORNERS AND EDGES
2. ALL BURRS MUST BE REMOVED

SL NO	REF	DESCRIPTION	QTY
1	A	DRILL ∅3.2 ⌴ ∅6.2, ↧ 2.4	8
2	B	DRILL ∅3.2 ⌵ ∅ 6.3	4
3	C	DRILL ∅4.1 AND M4 HELICOIL TAP	2
4	D	DRILL ∅4.1, ↧15 AND M4 HELICOIL TAP	5

REV	CN.NO.	DATE	DESCRIPTION	CHECKED	APPROVED	NEXT ASSEMBLY	ITEM	QTY
4								
3								
2								
1								
0		19.08.17	ORIGINAL			DSA 36 109 0 020	22	1

MATERIAL: ALUMINIUM HE-30	FINISH: YELLOW CC COATING	PROJ.	TOL.GEN. ± IS:2102 TOL.AXIS. ± (MED)	PRJ. 109	
DRAWN: MALIKSAD	CHECKED	APPROVED	DIMNS: mm	SCALE: NTS	TITLE: BOTTOM REAR HT FRAME
DATE 19.08.17	DATE	DATE	DRG. NUMBER: DPD 36 109 0 173	SIZE: A3	ISSUE: 1
KERALA STATE ELECTRONICS DEVELOPMENT CORPORATION LIMITED.				NO.OF SHEETS: 1/2	

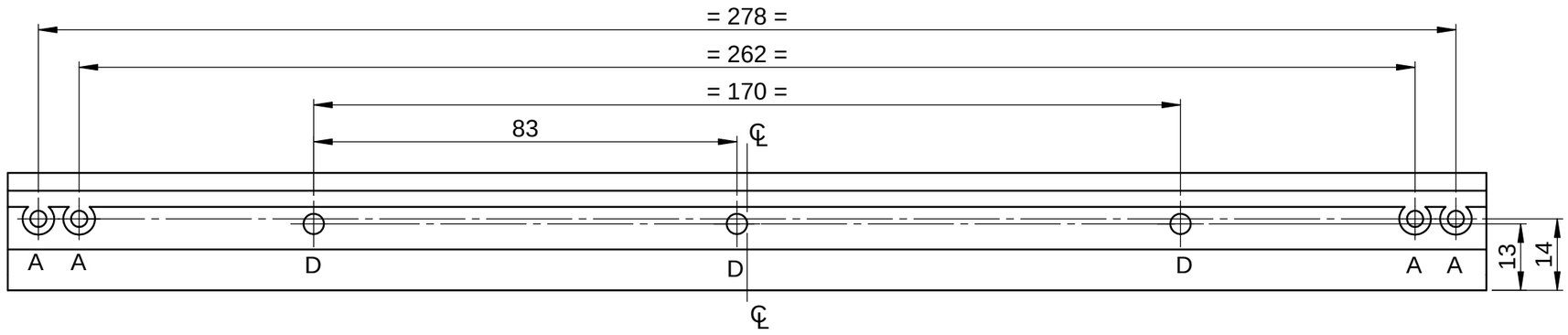

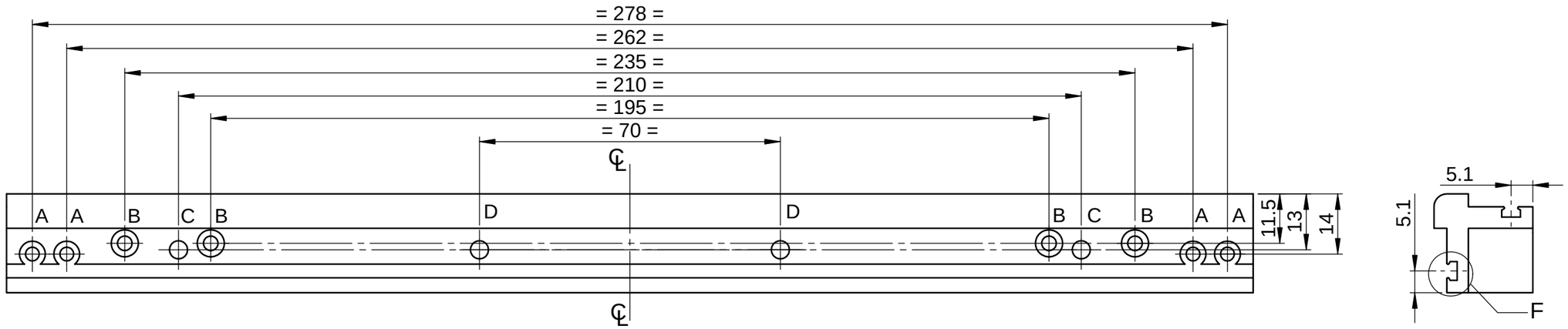

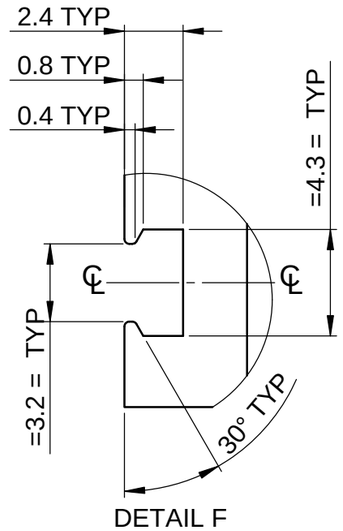

DETAIL F

REV	CN.NO.	DATE	DESCRIPTION	CHECKED	APPROVED	NEXT ASSEMBLY	ITEM	QTY
4								
3								
2								
1								
0		19.08.17	ORIGINAL			DSA 36 109 0 020	22	1

MATERIAL: ALUMINIUM HE-30	FINISH: YELLOW CC COATING	PROJ.	TOL.GEN. ± IS:2102 TOL.AXIS. ± (MED)	PRJ. 109		
DRAWN: MALIKSAD	CHECKED	APPROVED	DIMNS: mm	SCALE: NTS	TITLE: BOTTOM REAR HT FRAME	
DATE 19.08.17	DATE	DATE	DRG. NUMBER: DPD 36 109 0 173		SIZE: A3	ISSUE: 1
KERALA STATE ELECTRONICS DEVELOPMENT CORPORATION LIMITED.					NO.OF SHEETS: 2 / 2	

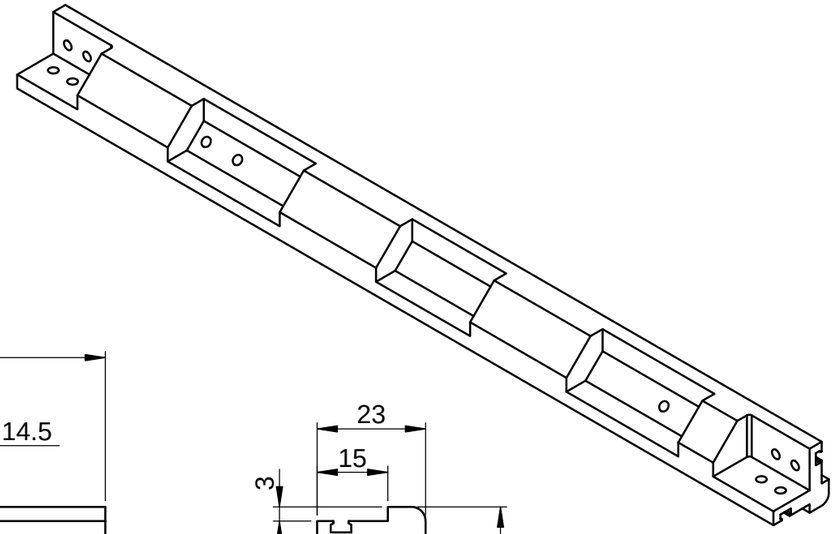

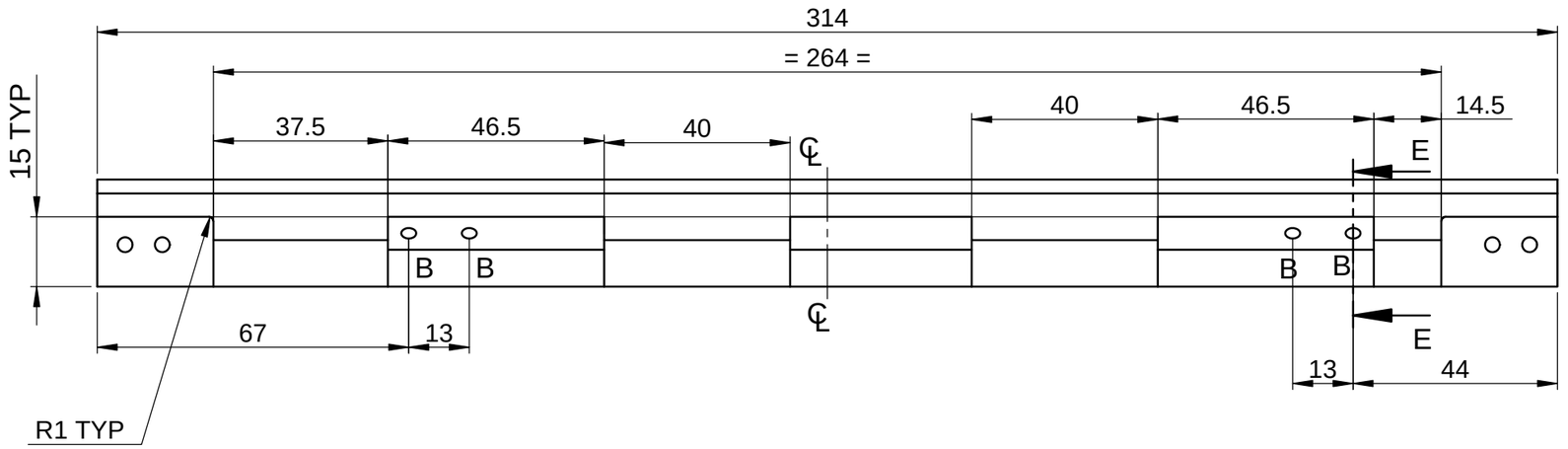

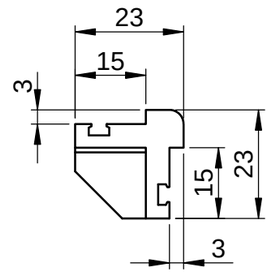

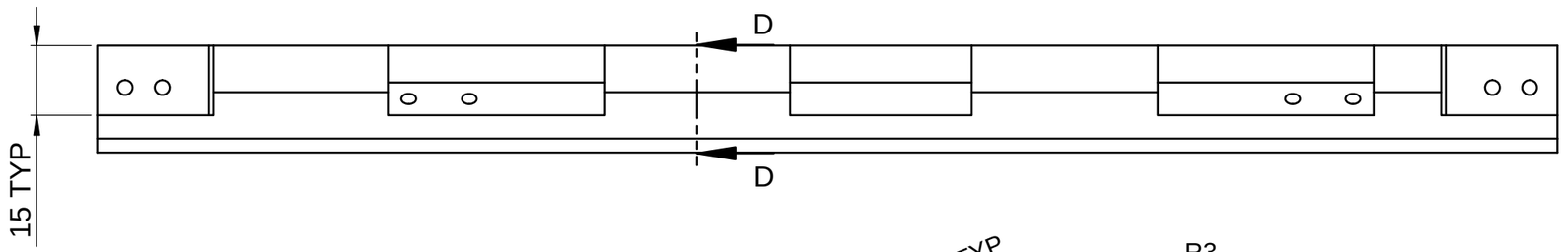

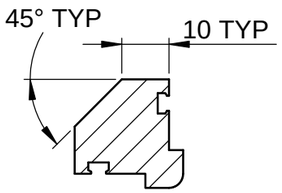

SECTION D-D

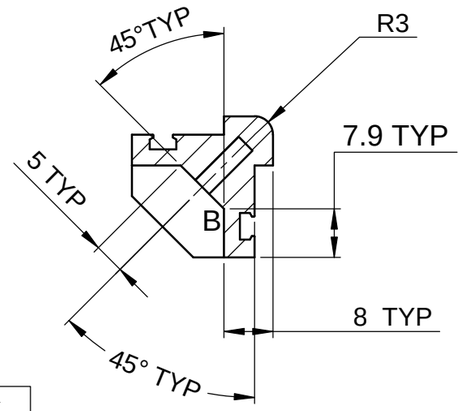

SECTION E-E

NOTE

1. AVOID SHARP CORNERS AND EDGES
2. ALL BURRS MUST BE REMOVED

SL NO	REF	DESCRIPTION	QTY
1	A	DRILL ⌀3.2 ⌴ ⌀6.2, ↧2.4	8
2	B	DRILL ⌀3.1, ↧10 AND M3 HELICOIL TAP	4
3	C	DRILL ⌀4.1, ↧5 AND M4 HELICOIL TAP	7

REV	CN.NO.	DATE	DESCRIPTION	CHECKED	APPROVED	NEXT ASSEMBLY	ITEM	QTY
4								
3								
2								
1								
0		19.08.17	ORIGINAL			DSA 36 109 0 020	11	1

MATERIAL: ALUMINIUM HE-30	FINISH: YELLOW CC COATING	PROJ.	TOL.GEN. ± IS:2102 TOL.AXIS. ± (MED)	PRJ. 109	
DRAWN: MALIKSAD	CHECKED	APPROVED	DIMNS: mm	SCALE: NTS	TITLE: BOTTOM RIGHT DEPTH FRAME
DATE 19.08.17	DATE	DATE	DRG. NUMBER: DPD 36 109 0 097	SIZE: A3	ISSUE: 1
KERALA STATE ELECTRONICS DEVELOPMENT CORPORATION LIMITED.				NO.OF SHEETS: 1/2	

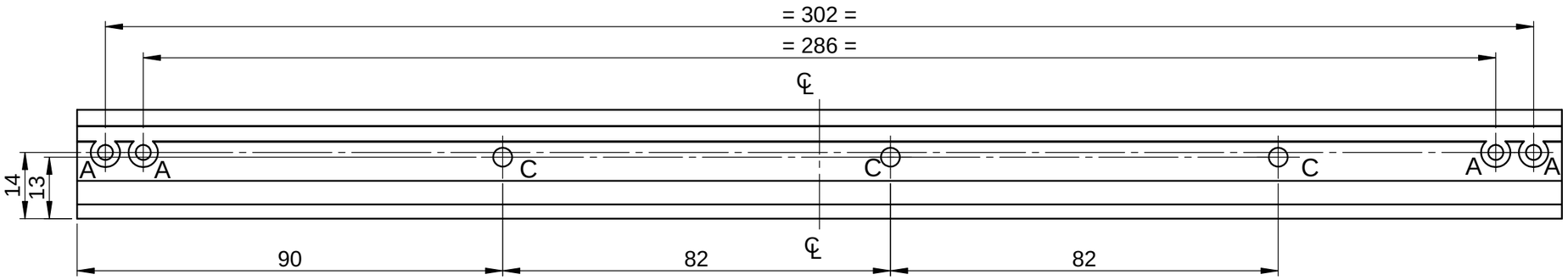

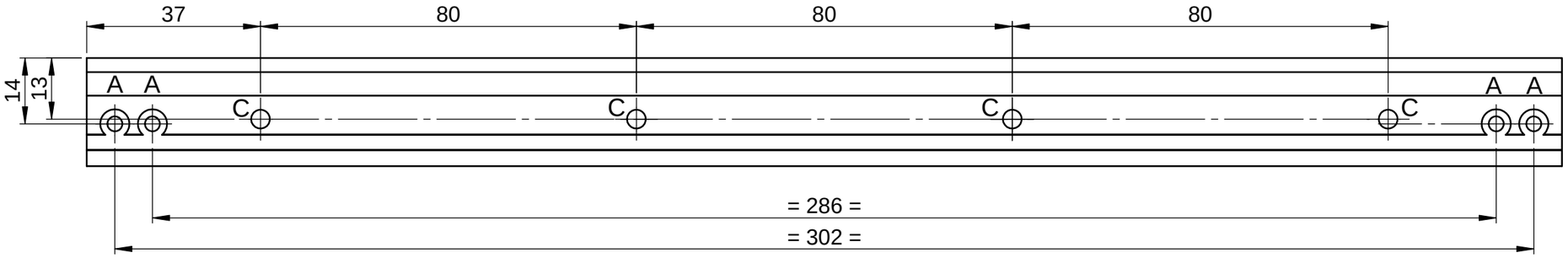

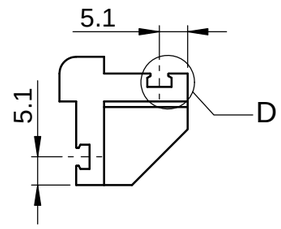

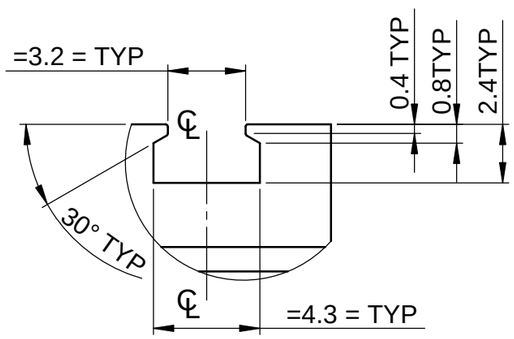

DETAIL D

REV	CN.NO.	DATE	DESCRIPTION	CHECKED	APPROVED	NEXT ASSEMBLY	ITEM	QTY
4								
3								
2								
1								
0		19.08.17	ORIGINAL			DSA 36 109 0 020	11	1

MATERIAL: ALUMINIUM HE-30	FINISH: YELLOW CC COATING	PROJ.	TOL.GEN. ± IS:2102 TOL.AXIS. ± (MED)	PRJ. 109	
DRAWN: MALIKSAD	CHECKED	APPROVED	DIMNS: mm / SCALE: NTS	TITLE: BOTTOM RIGHT DEPTH FRAME	
DATE 19.08.17	DATE	DATE			

KERALA STATE ELECTRONICS DEVELOPMENT CORPORATION LIMITED.

DRG. NUMBER: DPD 36 109 0 097

SIZE	ISSUE
A3	1
NO.OF SHEETS	2 / 2

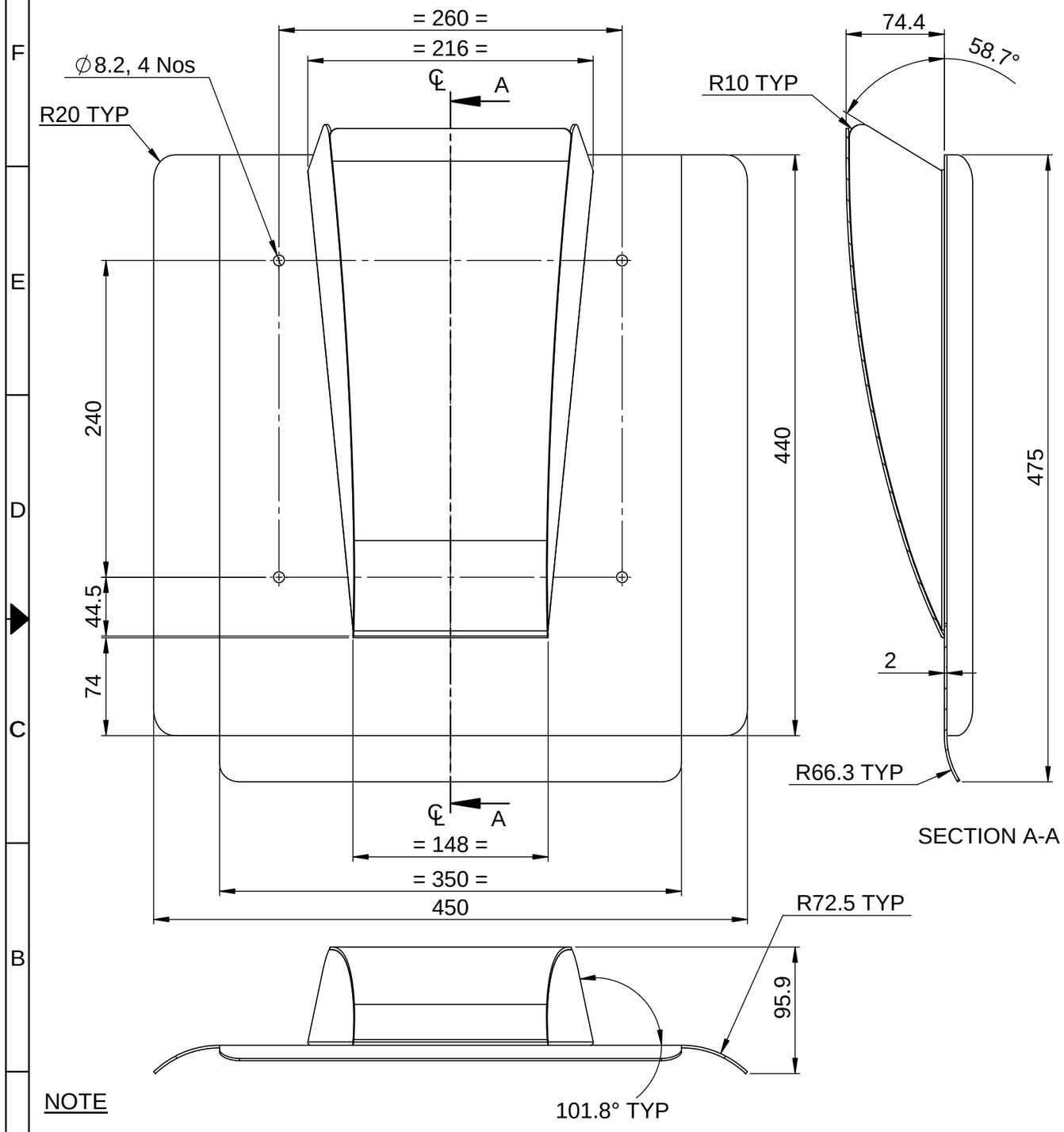

SECTION A-A

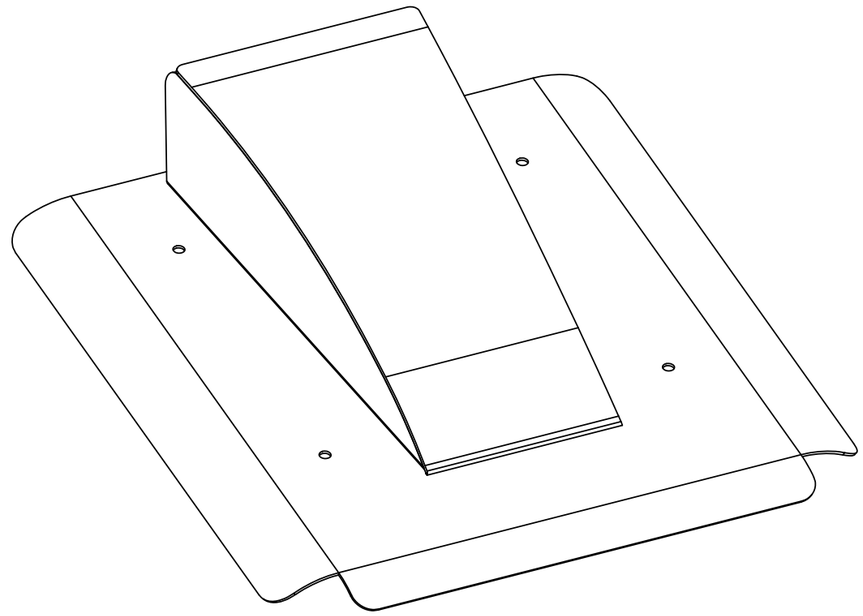

NOTE

1. AVOID SHARP CORNERS AND EDGES
2. ALL BURRS MUST BE REMOVED
3. DIMENSIONLESS FEATURES TO BE MEASURED FROM IGS FILE
4. ALL JOINTS TO BE WELDED AND ROUND SMOOTH

REV	CN.NO.	DATE	DESCRIPTION	CHECKED	APPROVED	NEXT ASSEMBLY	ITEM	QTY
4								
3								
2								
1								
0		19.08.16	ORIGINAL			DSA 36 109 0 018	1	1

MATERIAL: ALUMINIUM H32-5052	FINISH: YELLOW CC COATING	PROJ.	TOL.GEN. ± IS:2102 TOL.AXIS. ± (MED)	PRJ. 109	
DRAWN: MALIKSAD	CHECKED	APPROVED	DIMNS: mm	SCALE: NTS	TITLE: CANOPY COVER
DATE 19.08.16	DATE	DATE	DRG. NUMBER: DPD 36 109 0 072	SIZE: A3	ISSUE: 1
KERALA STATE ELECTRONICS DEVELOPMENT CORPORATION LIMITED.				NO.OF SHEETS: 1 / 1	

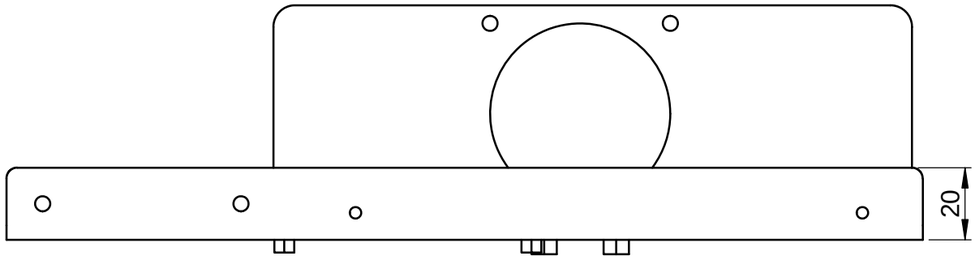

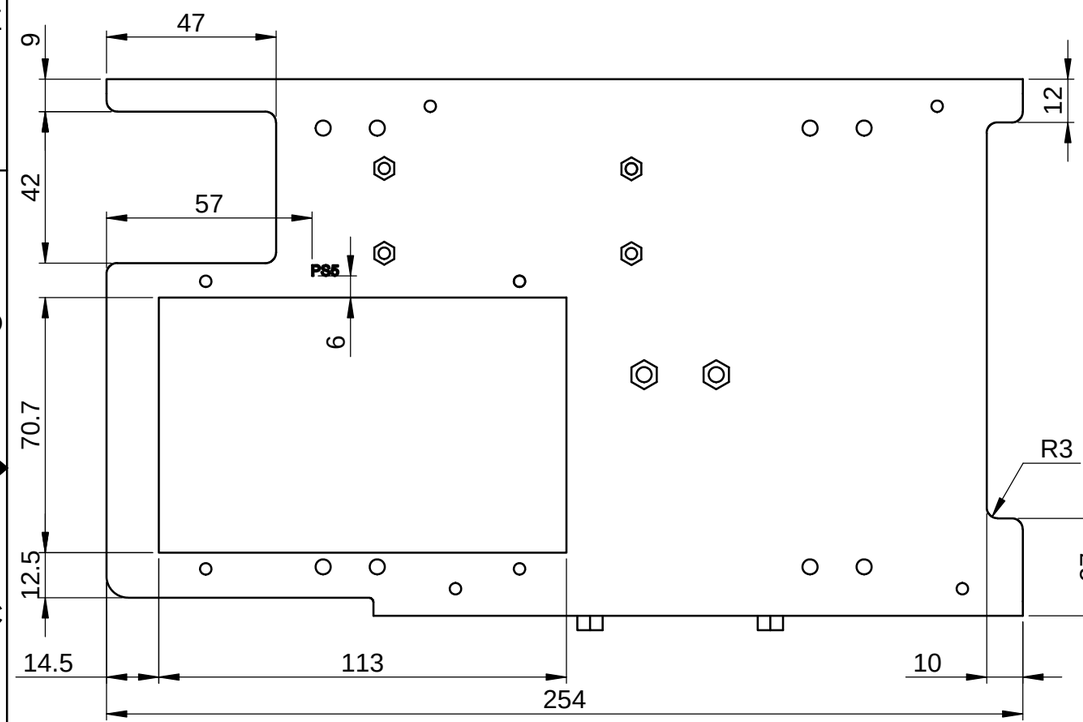

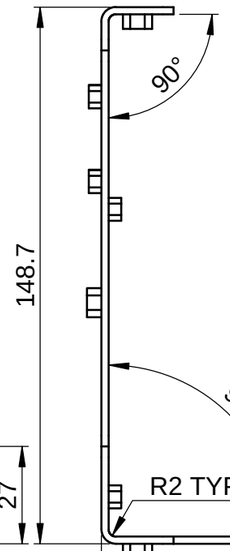

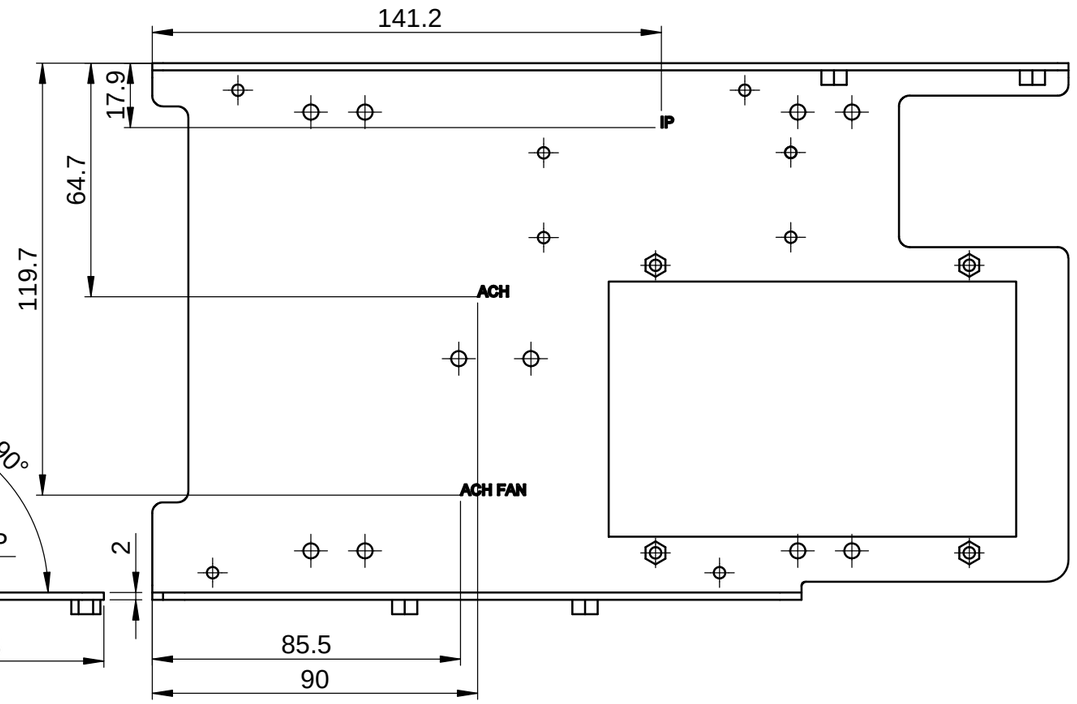

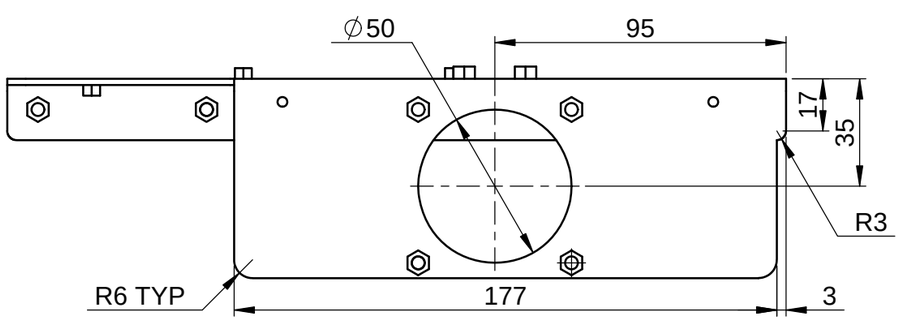

REV	CN.NO.	DATE	DESCRIPTION	CHECKED	APPROVED	NEXT ASSEMBLY	ITEM	QTY
4								
3								
2								
1								
0		19.08.17	ORIGINAL			DSA 36 109 0 012	3	1

MATERIAL: 2 mm SS 316 SHEET	FINISH: --	PROJ.	TOL.GEN. ± IS:2102 TOL.AXIS. ± (MED)	PRJ. 109	
DRAWN: MALIKSAD	CHECKED	APPROVED	DIMNS: mm	SCALE: NTS	TITLE: CARD CAGE LEFT SHEET
DATE 19.08.17	DATE	DATE	DRG. NUMBER: DPD 36 109 0 033	SIZE: A3	ISSUE: 1
KERALA STATE ELECTRONICS DEVELOPMENT CORPORATION LIMITED.				NO.OF SHEETS: 1 / 2	

SL NO	REF	DESCRIPTION	QTY
1	A	∅4.2	8
2	B	M4 RIVET NUT	8
3	C	∅3.2	8
4	D	M3 RIVET NUT	8

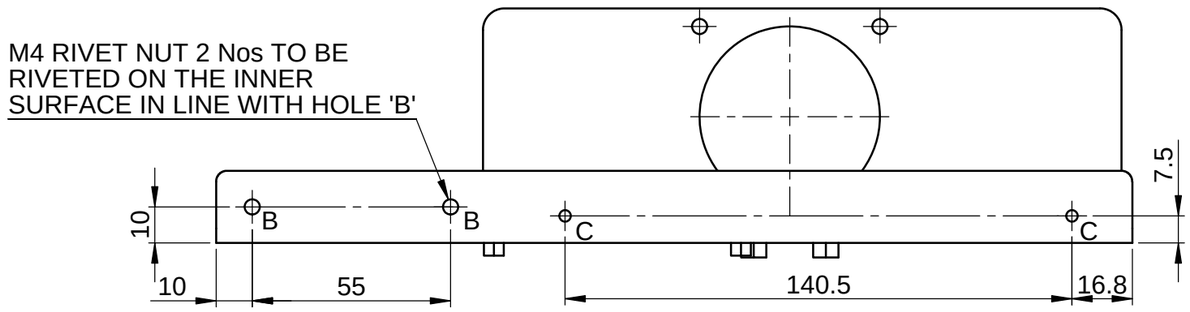

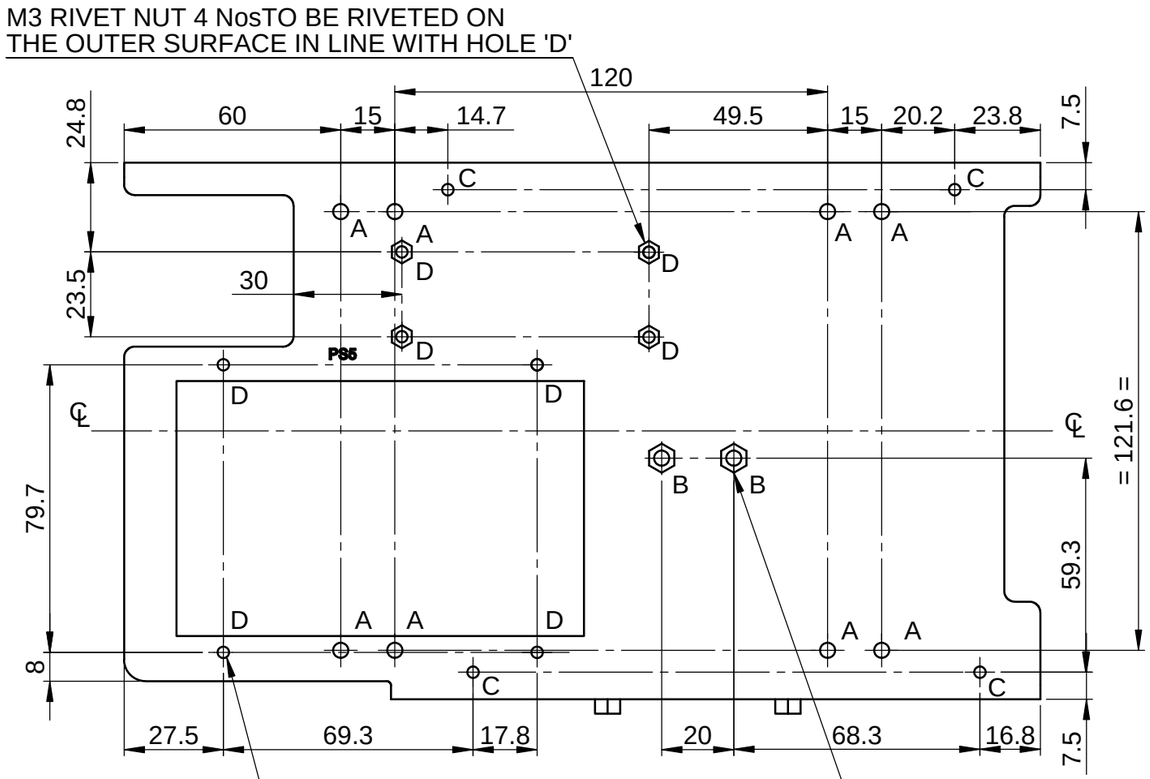

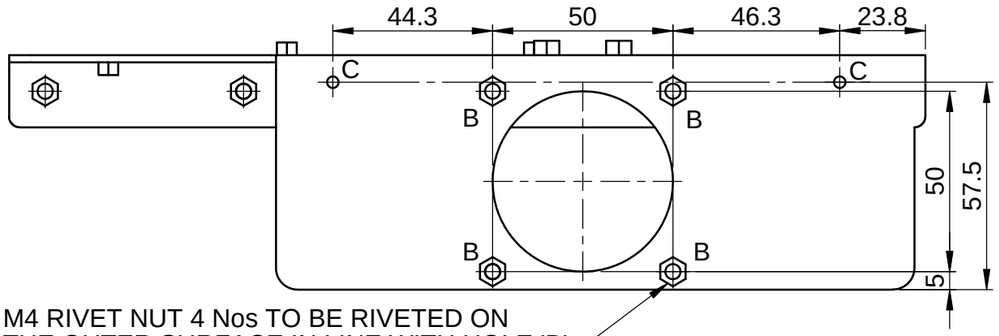

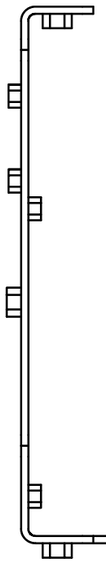

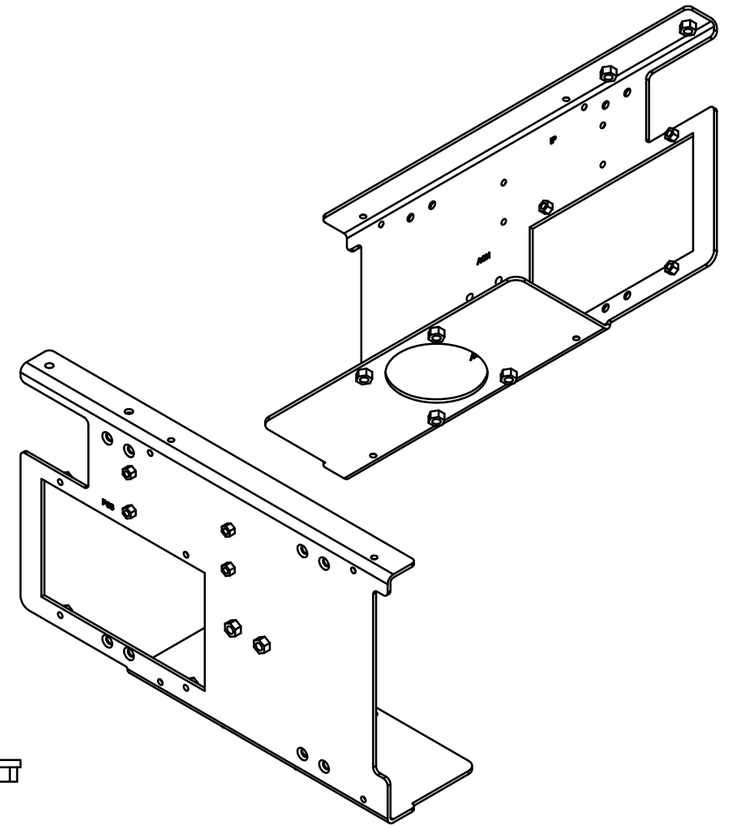

NOTE

1. AVOID SHARP CORNERS AND EDGES
2. 3x0.5↓ TEXT TO BE ENGRAVED AND FILLED WITH BLACK PAINT

REV	CN.NO.	DATE	DESCRIPTION	CHECKED	APPROVED	NEXT ASSEMBLY	ITEM	QTY
4								
3								
2								
1								
0		19.08.17	ORIGINAL			DSA 36 109 0 012	3	1

MATERIAL: 2 mm SS 316 SHEET	FINISH: --	PROJ.	TOL.GEN. ± IS:2102 TOL.AXIS. ± (MED)	PRJ. 109	
DRAWN: MALIKSAD	CHECKED	APPROVED	DIMNS: mm	SCALE: NTS	TITLE: CARD CAGE LEFT SHEET
DATE 19.08.17	DATE	DATE	DRG. NUMBER: DPD 36 109 0 033	SIZE: A3	ISSUE: 1
KERALA STATE ELECTRONICS DEVELOPMENT CORPORATION LIMITED				NO.OF SHEETS: 2 / 2	

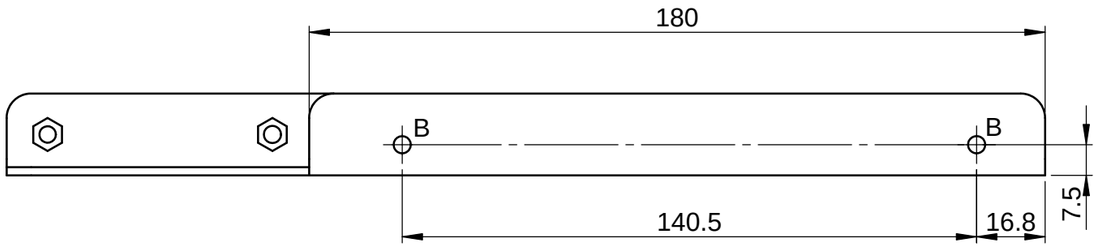

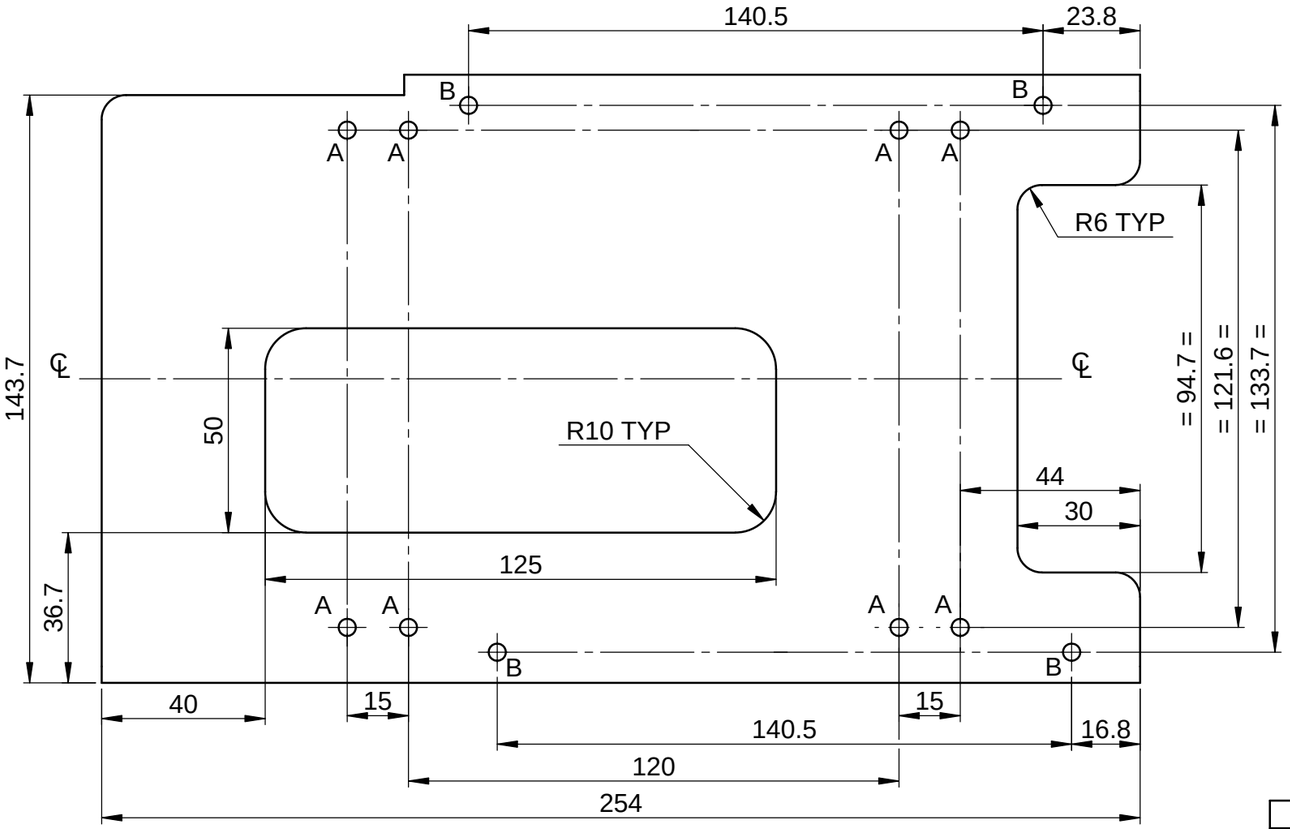

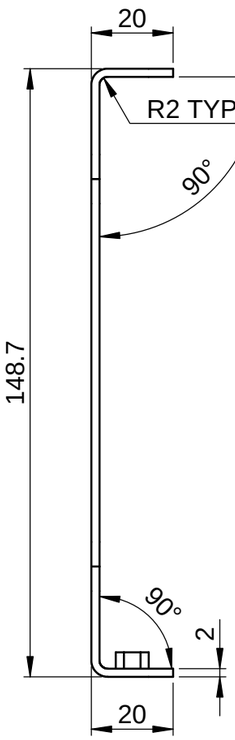

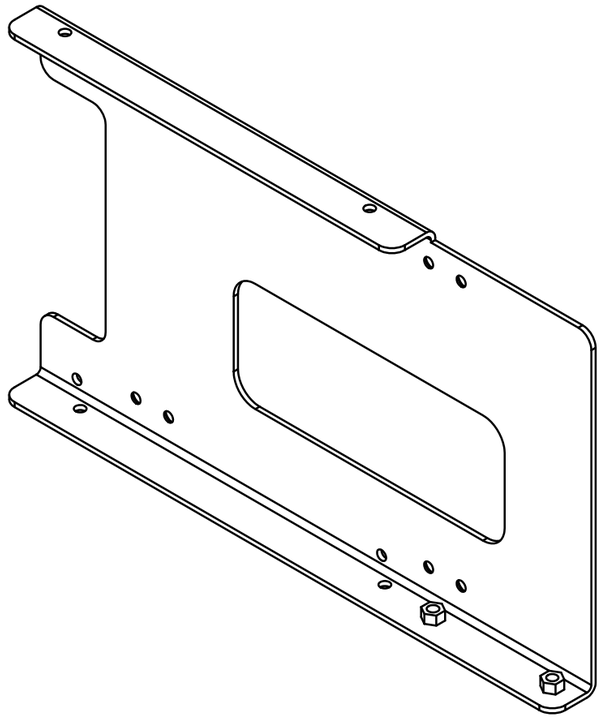

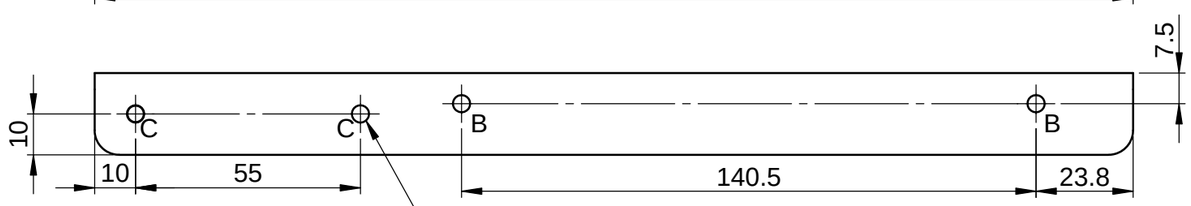

NOTE:-

1. AVOID SHARP EDGES AND CORNERS
2. ALL BURRS MUST BE REMOVED

SL NO	REF	DESCRIPTION	QTY
1	A	∅4.2	8
2	B	∅3.2	8
3	C	M4 RIVET NUT	2

REV	CN.NO.	DATE	DESCRIPTION	CHECKED	APPROVED	NEXT ASSEMBLY	ITEM	QTY
4								
3								
2								
1								
0		11.10.17	ORIGINAL			DSA 36 109 0 012	16	1

MATERIAL: 2mm SS 316 SHEET	FINISH: --	PROJ.	TOL.GEN. ± IS:2102 TOL.AXIS. ± (MED)	PRJ. 109	
DRAWN: MALIKSAD	CHECKED	APPROVED	DIMNS: mm	SCALE: NTS	TITLE: CARD CAGE RIGHT PLATE
DATE 11.10.17	DATE	DATE	DRG. NUMBER: DPD 36 109 0 129	SIZE: A3	ISSUE: 1
KERALA STATE ELECTRONICS DEVELOPMENT CORPORATION LIMITED				NO.OF SHEETS: 1/1	

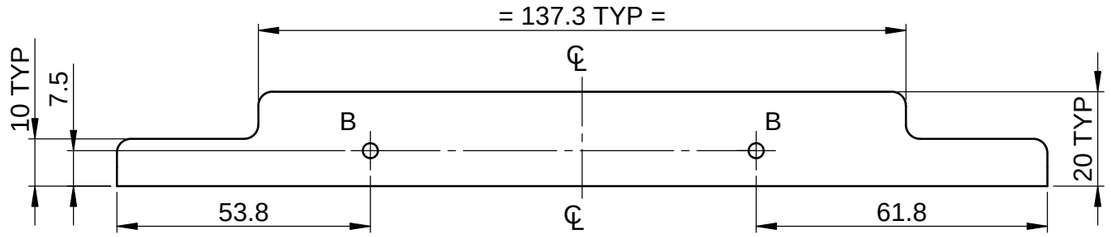

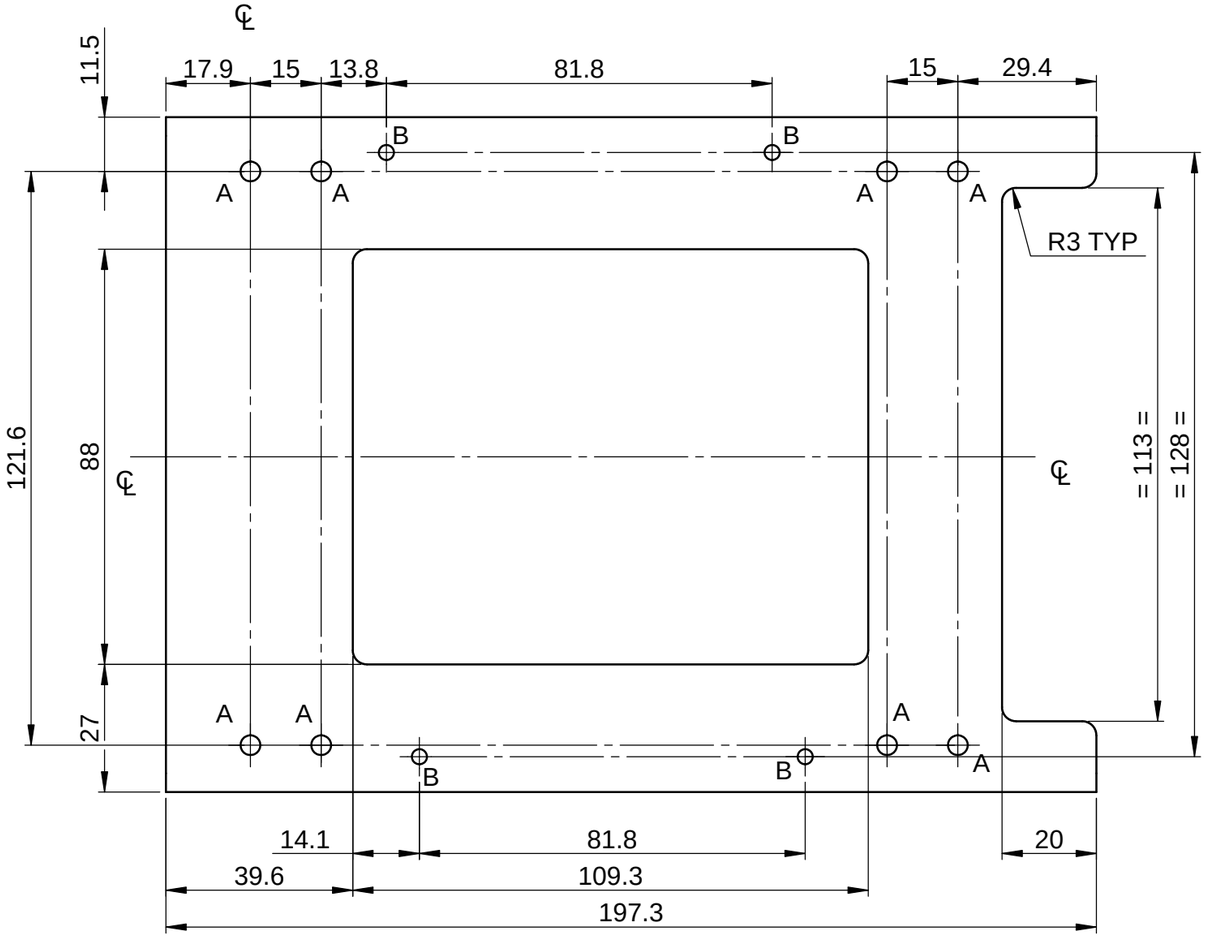

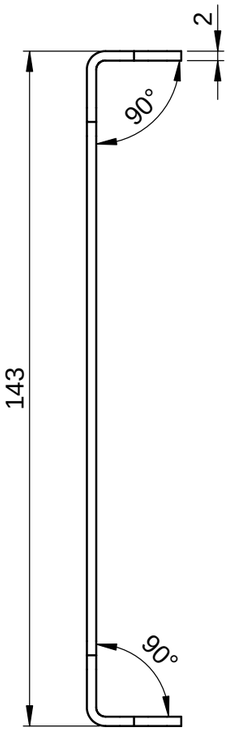

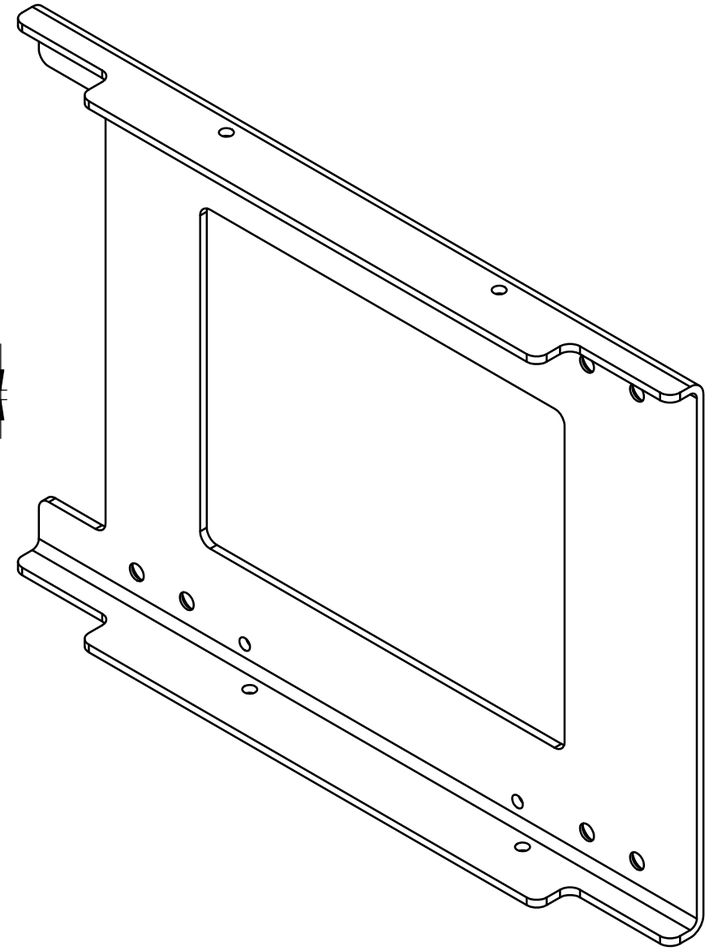

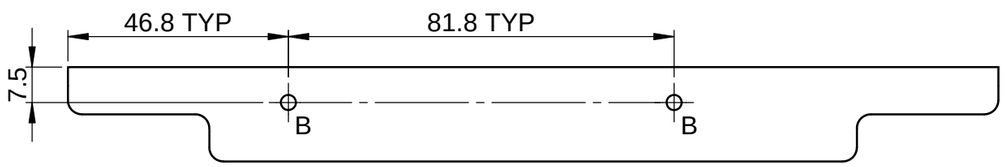

NOTE

1. AVOID SHARP CORNERS AND EDGES
2. ALL BURRS MUST BE REMOVED

SL NO	REF	DESCRIPTION	QTY
1	A	∅4.2	8
2	B	∅3.2	8

REV	CN.NO.	DATE	DESCRIPTION	CHECKED	APPROVED	NEXT ASSEMBLY	ITEM	QTY
4								
3								
2								
1								
0		19.08.17	ORIGINAL			DSA 36 102 0 018	3	1

MATERIAL: 2mm SS 316 SHEET	FINISH: --	PROJ.	TOL.GEN. ± IS:2102 TOL.AXIS. ± (MED)	PRJ. 109	
DRAWN: MALIKSAD	CHECKED	APPROVED	DIMNS: mm	SCALE: NTS	TITLE: CARD GUIDE LEFT SHEET
DATE 19.08.17	DATE	DATE	DRG. NUMBER: DPD 36 109 0 066	SIZE: A3	ISSUE: 1
KERALA STATE ELECTRONICS DEVELOPMENT CORPORATION LIMITED				NO.OF SHEETS: 1 / 1	

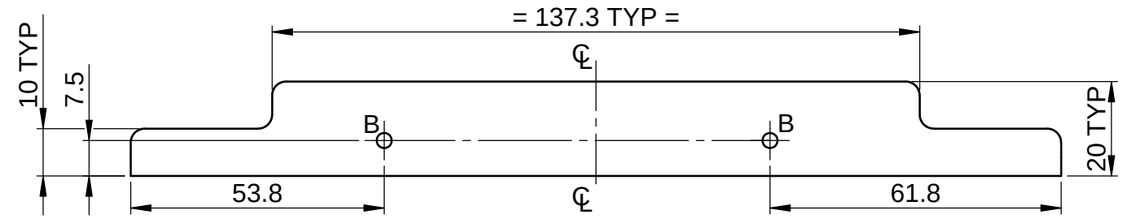

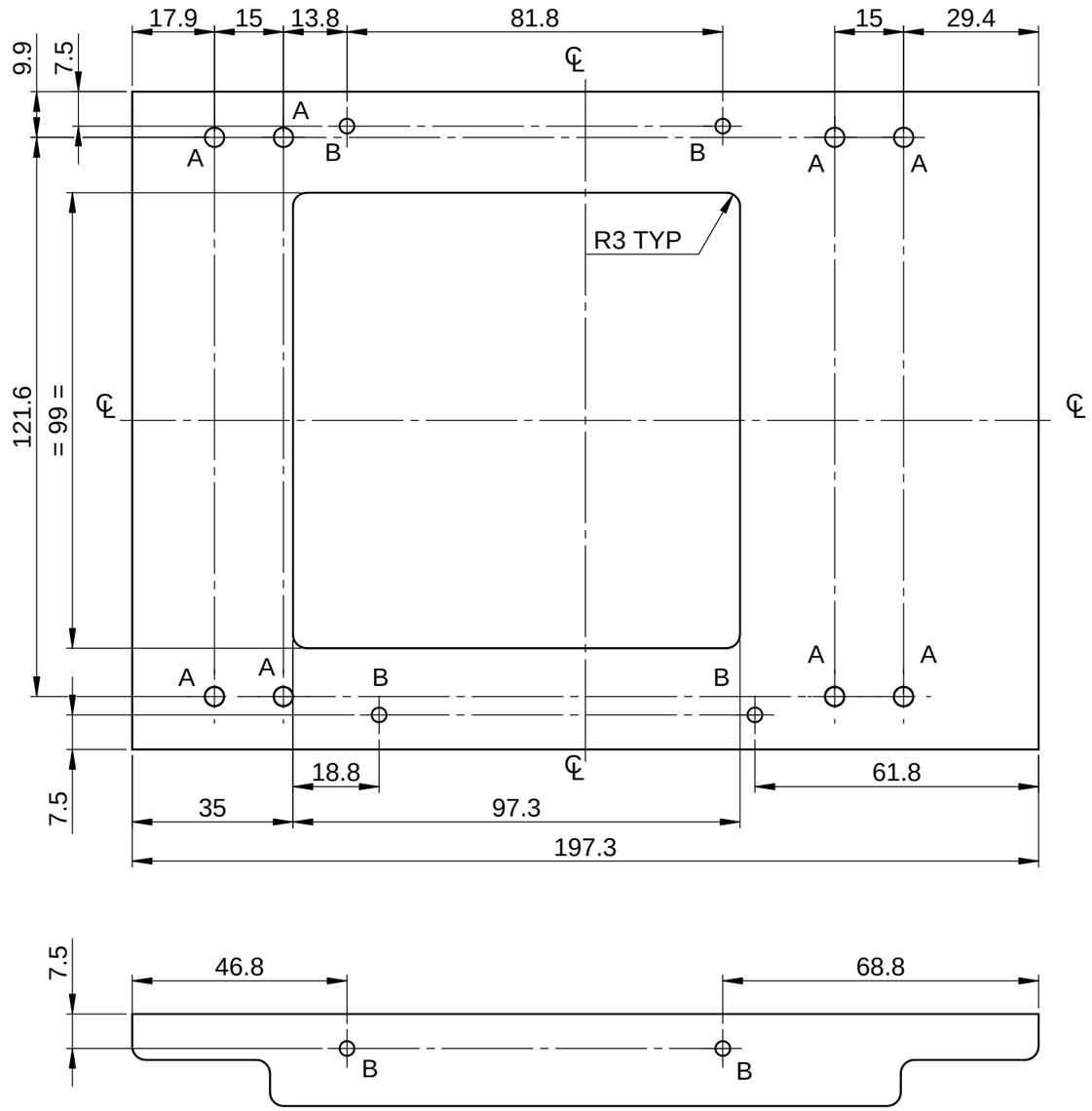

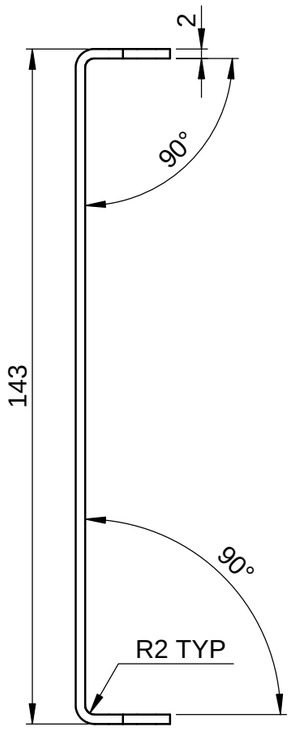

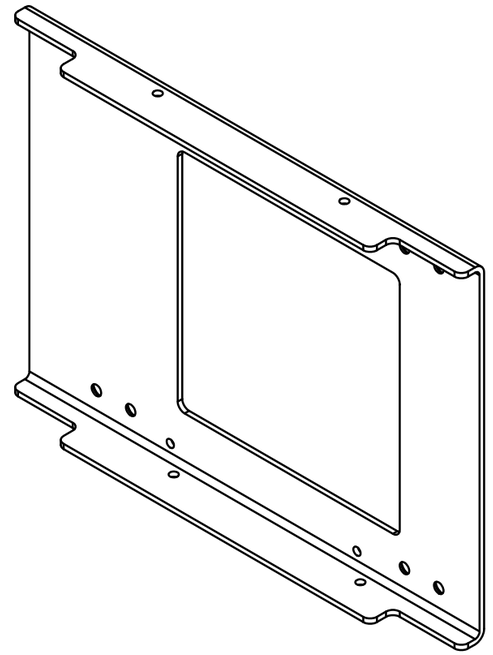

NOTE

1. AVOID SHARP CORNERS AND EDGES
2. ALL BURRS MUST BE REMOVED

SL NO	REF	DESCRIPTION	QTY
1	A	∅4.2 ⌵ ∅6.8	8
2	B	∅3.2	8

REV	CN.NO.	DATE	DESCRIPTION	CHECKED	APPROVED	NEXT ASSEMBLY	ITEM	QTY
4								
3								
2								
1								
0		19.08.17	ORIGINAL			DSA 36 109 0 018	10	1

MATERIAL: 2 mm SS 316 SHEET	FINISH: --	PROJ.	TOL.GEN. ± IS:2102 TOL.AXIS. ± (MED)	PRJ. 109	
DRAWN: MALIKSAD	CHECKED	APPROVED	DIMNS: mm	SCALE: NTS	TITLE: CARD GUIDE RIGHT SHEET
DATE 19.08.17	DATE	DATE	DRG. NUMBER: DPD 36 109 0 070	SIZE: A3	ISSUE: 1
KERALA STATE ELECTRONICS DEVELOPMENT CORPORATION LIMITED				NO.OF SHEETS: 1/1	

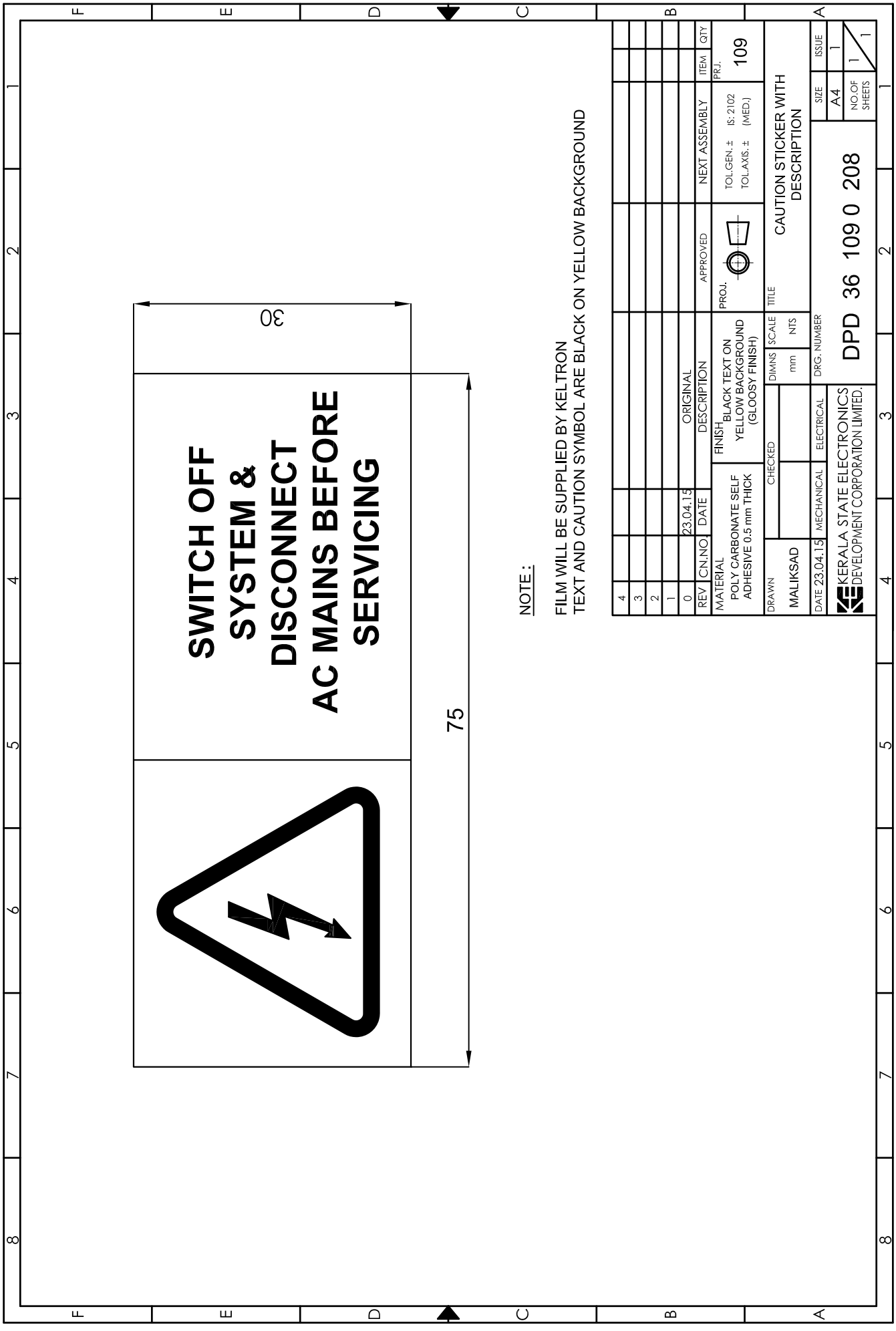
SWITCH OFF
SYSTEM &
DISCONNECT
AC MAINS BEFORE
SERVICING
30
75
NOTE :
FILM WILL BE SUPPLIED BY KELTRON
TEXT AND CAUTION SYMBOL ARE BLACK ON YELLOW BACKGROUND
4
3
2
1
0
REV
CN.NO
DATE
ORIGINAL
23.04.15
DESCRIPTION
MATERIAL
POLY CARBONATE SELF
ADHESIVE 0.5 mm THICK
FINISH
BLACK TEXT ON
YELLOW BACKGROUND
(GLOOSY FINISH)
APPROVED
PROJ.
NEXT ASSEMBLY
ITEM
QTY
PRJ.
109
TOL.GEN. ±
TOL.AXIS. ±
IS: 2102
(MED.)
DRAWN
MALIKSAD
DATE 23.04.15
CHECKED
MECHANICAL
ELECTRICAL
DIMNS
mm
SCALE
NTS
DRG. NUMBER
TITLE
CAUTION STICKER WITH
DESCRIPTION
KERALA STATE ELECTRONICS
DEVELOPMENT CORPORATION LIMITED.
DPD 36 109 0 208
SIZE
A4
ISSUE
1
NO.OF
SHEETS
1
1

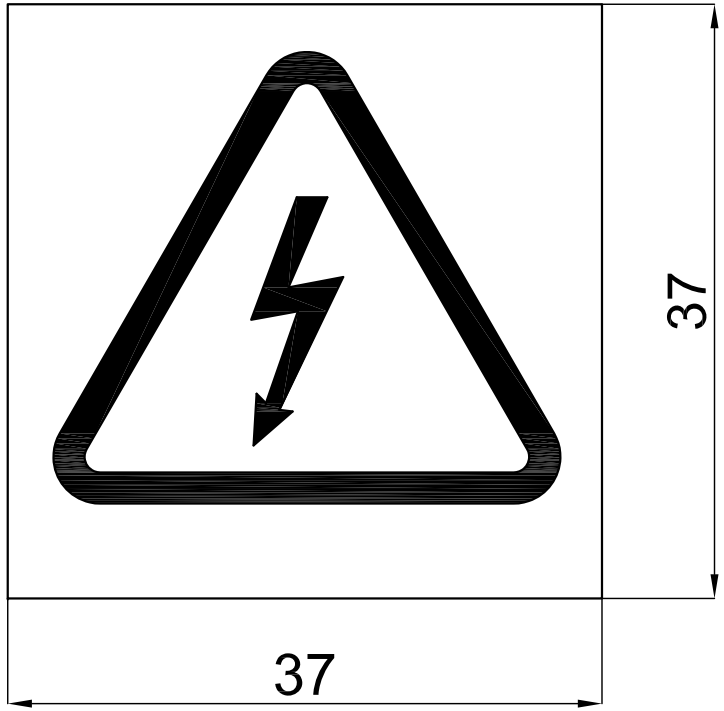

NOTE :

FILM WILL BE SUPPLIED BY KELTRON
TEXT AND CAUTION SYMBOL ARE BLACK ON YELLOW BACKGROUND

REV	CN.NO.	DATE	DESCRIPTION	APPROVED	NEXT ASSEMBLY	ITEM	QTY
4							
3							
2							
1							
0		23.04.15	ORIGINAL				

MATERIAL POLY CARBONATE SELF ADHESIVE 0.5 mm THICK	FINISH BLACK TEXT ON YELLOW BACKGROUND (GLOOSY FINISH)	PROJ.	TOL.GEN. ± IS: 2102 TOL.AXIS. ± (MED.)	PRJ. 109

DRAWN	CHECKED		DIMNS	SCALE	TITLE
MALIKSAD			mm	NTS	CAUTION STICKER
DATE 23.04.15	MECHANICAL	ELECTRICAL	DRG. NUMBER		SIZE A4 / ISSUE 1
KERALA STATE ELECTRONICS DEVELOPMENT CORPORATION LIMITED.			DPD 36 109 0 207		NO.OF SHEETS 1/1

RESTRICTED

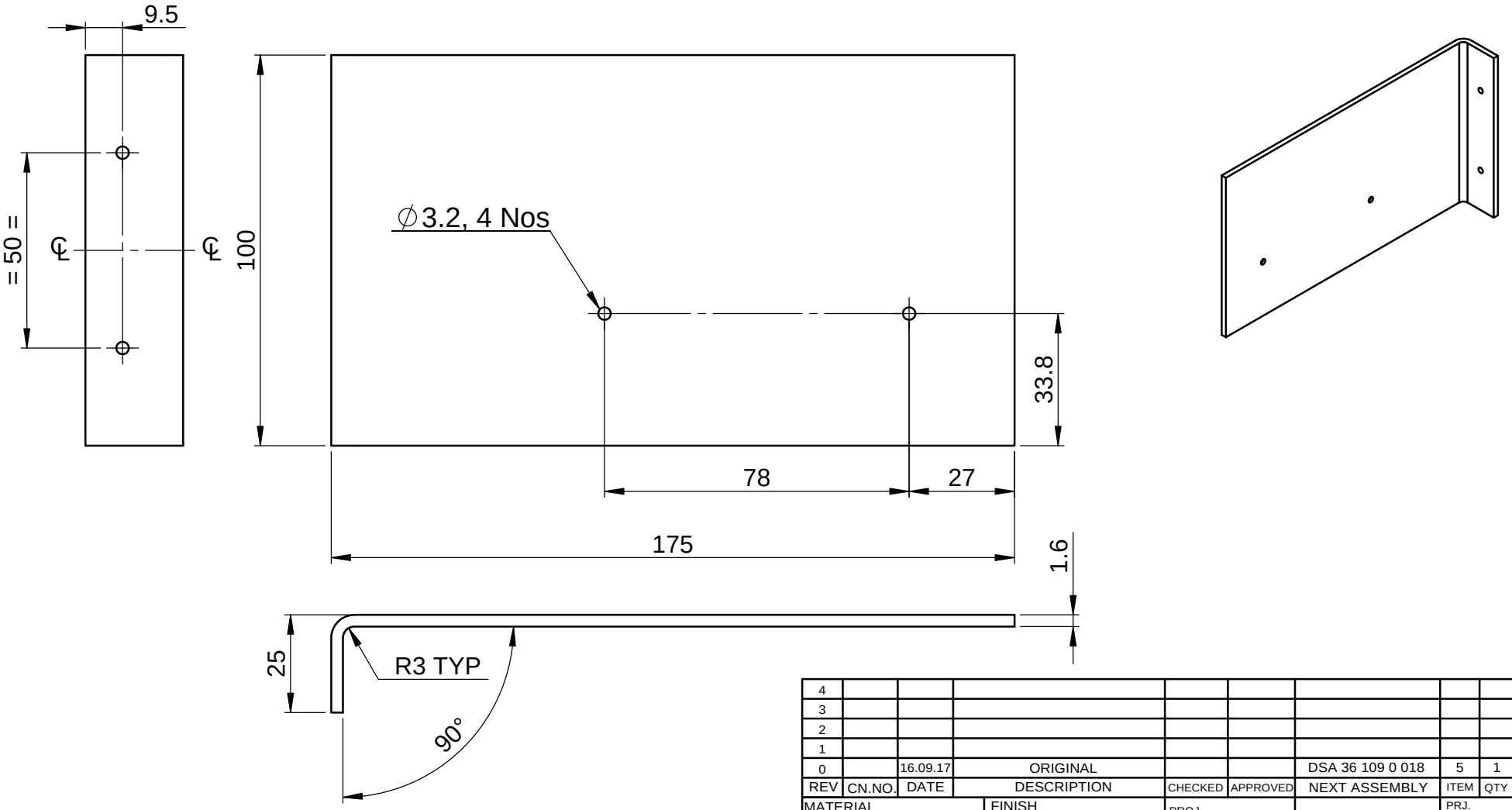

NOTE

AVOID SHARP EDGES AND CORNERS

REV	CN.NO.	DATE	DESCRIPTION	CHECKED	APPROVED	NEXT ASSEMBLY	ITEM	QTY
4								
3								
2								
1								
0		16.09.17	ORIGINAL			DSA 36 109 0 018	5	1

MATERIAL	FINISH	PROJ.		PRJ.
1.6 mm SS 316 SHEET	--		TOL.GEN. ± IS: 2102 TOL.AXIS. ± (MED.)	109

DRAWN	CHECKED	APPROVED	DIMNS	SCALE	TITLE
MALIKSAD			mm	NTS	CLAMP FOR PS1 POWER SUPPLY
DATE 16.09.17	DATE	DATE	DRG. NUMBER		SIZE / ISSUE

KERALA STATE ELECTRONICS DEVELOPMENT CORPORATION LIMITED

DPD 36 109 0 067

SIZE: A4 | ISSUE: 1

NO.OF SHEETS: 1 / 1

RESTRICTED

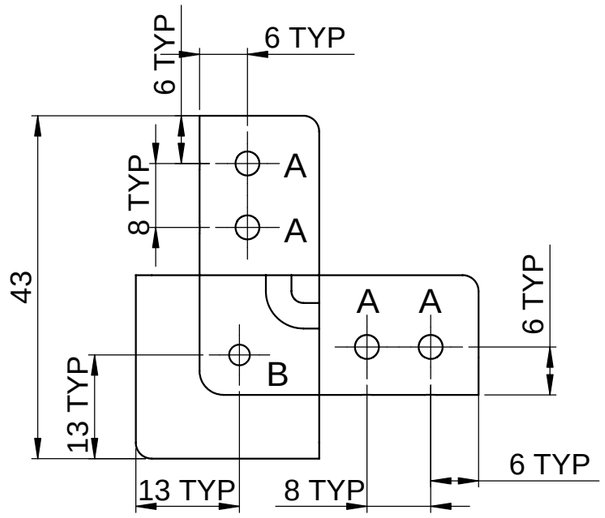

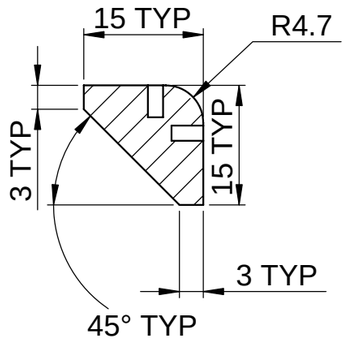

SECTION A-A

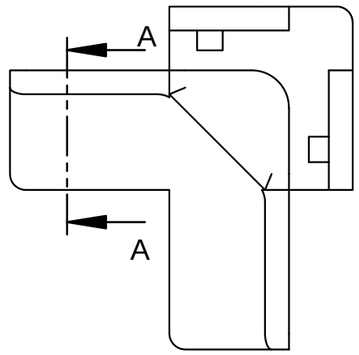

REAR VIEW

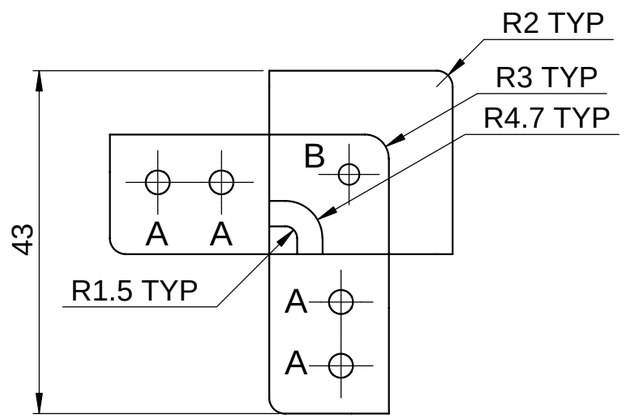

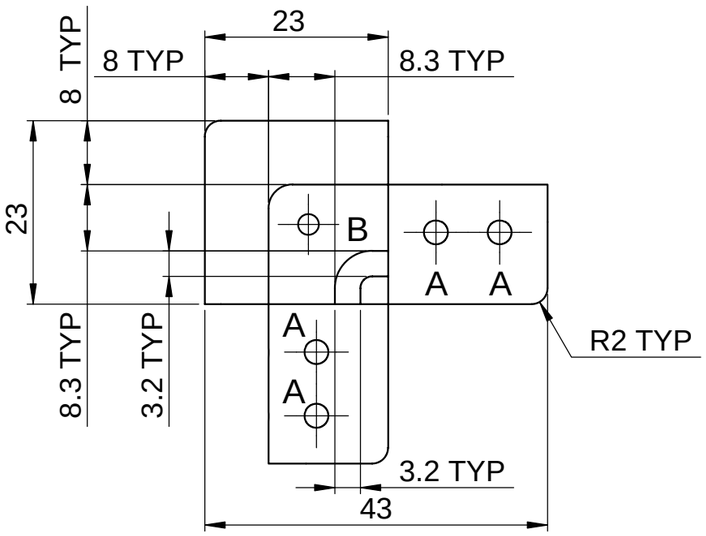

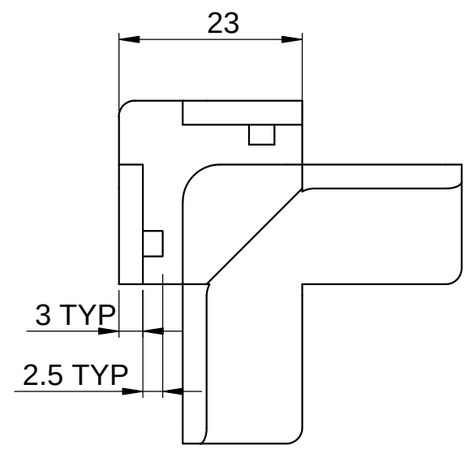

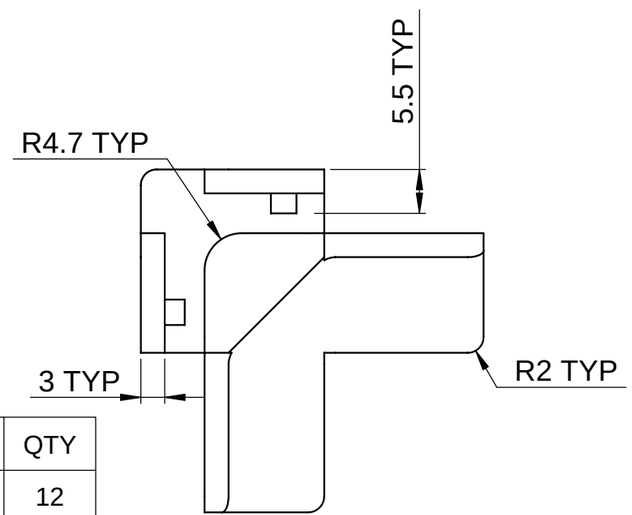

NOTE

1. AVOID SHARP EDGES AND CORNERS
2. ALL BURRS MUST BE REMOVED

SL NO	REF	DESCRIPTION	QTY
3	A	DRILL ⌀3.1, ↧4 AND M3 HELICOIL TAP	12
6	B	DRILL ⌀4.1, ↧6 AND M4 HELICOIL TAP	3

REV	CN.NO.	DATE	DESCRIPTION	CHECKED	APPROVED	NEXT ASSEMBLY	ITEM	QTY
4								
3								
2								
1								
0		25.08.17	ORIGINAL			DSA 36 109 0 020	1	8

MATERIAL	FINISH	PROJ.		PRJ.
ALUMINIUM HE-30	YELLOW CC COATING		TOL.GEN. ± IS:2102 TOL.AXIS. ± (MED)	109

DRAWN	CHECKED	APPROVED	DIMNS	SCALE	TITLE
MALIKSAD			mm	NTS	CORNER CONNECTOR

DATE 25.08.17	DATE	DATE	DRG. NUMBER	SIZE	ISSUE
KERALA STATE ELECTRONICS DEVELOPMENT CORPORATION LIMITED.			DPD 36 109 0 087	A3	1
				NO.OF SHEETS	1 / 2

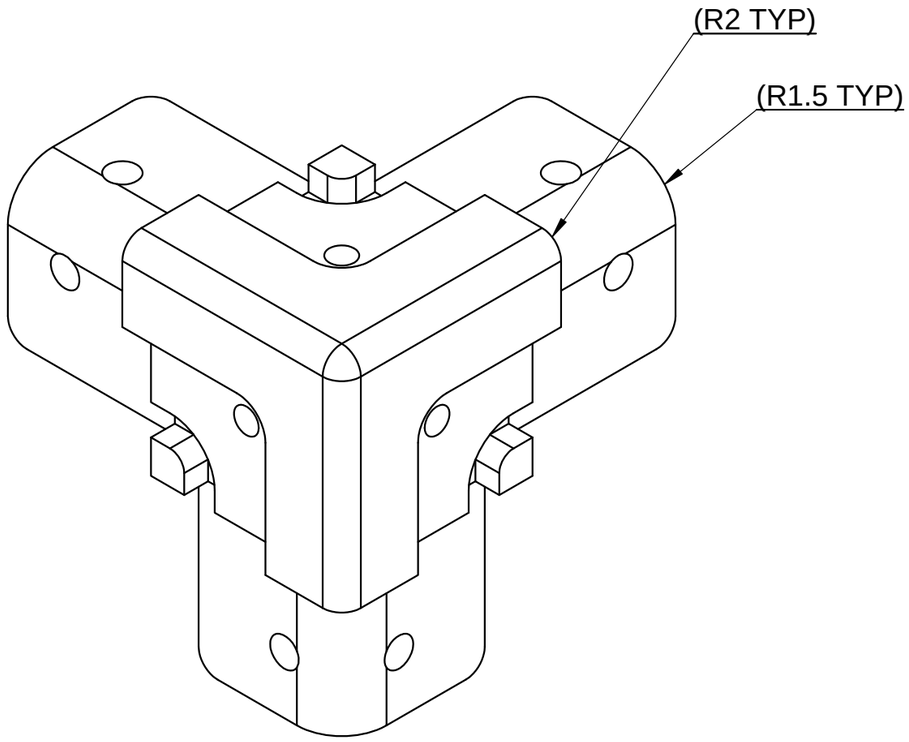

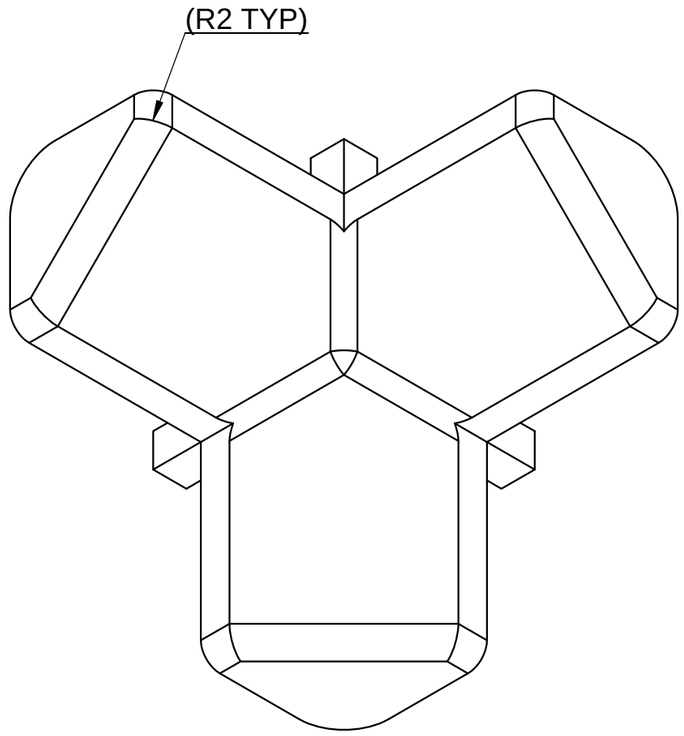

REV	CN.NO.	DATE	DESCRIPTION	CHECKED	APPROVED	NEXT ASSEMBLY	ITEM	QTY
4								
3								
2								
1								
0		25.08.17	ORIGINAL			DSA 36 109 0 020	1	8

MATERIAL: ALUMINIUM HE-30	FINISH: YELLOW CC COATING	PROJ.	TOL.GEN. ± IS:2102 TOL.AXIS. ± (MED)	PRJ. 109	
DRAWN: MALIKSAD	CHECKED	APPROVED	DIMNS: mm	SCALE: NTS	TITLE: CORNER CONNECTOR
DATE 25.08.17	DATE	DATE	DRG. NUMBER: DPD 36 109 0 087	SIZE: A3	ISSUE: 1
KERALA STATE ELECTRONICS DEVELOPMENT CORPORATION LIMITED.				NO.OF SHEETS: 2 / 2	

RESTRICTED

RESTRICTED

SL NO	REF	DESCRIPTION	QTY
1	A	∅8.2	1
2	B	∅6	4

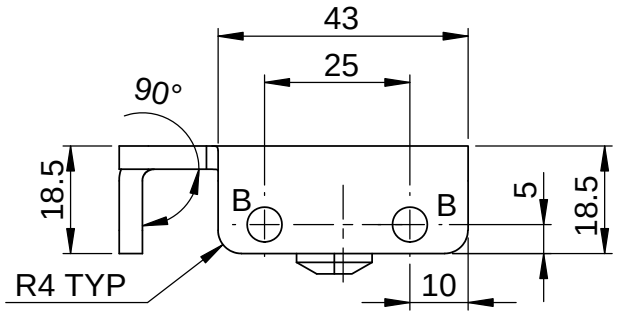

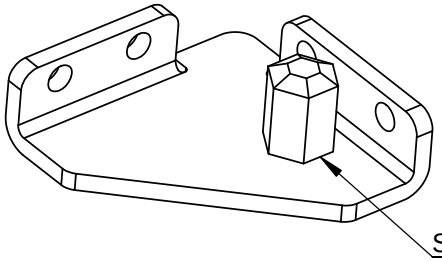

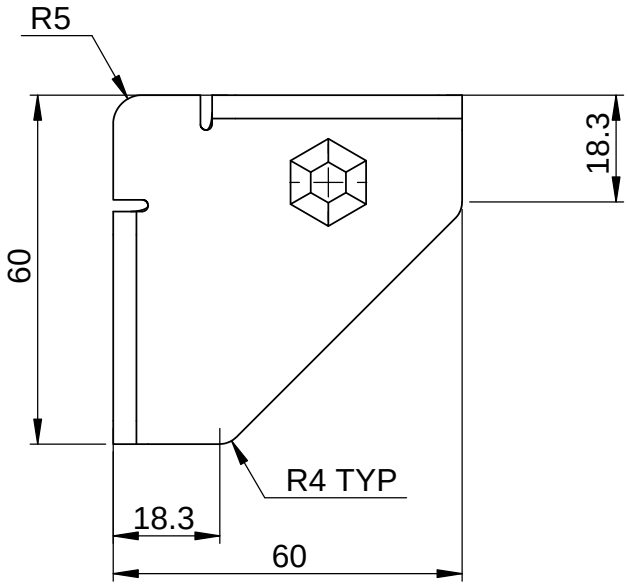

BOTTOM VIEW

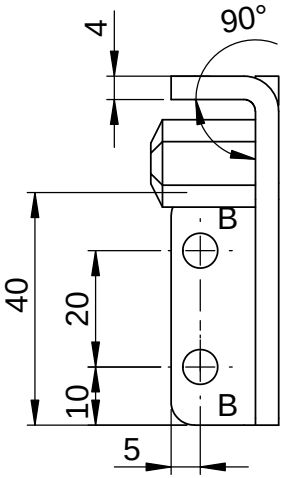

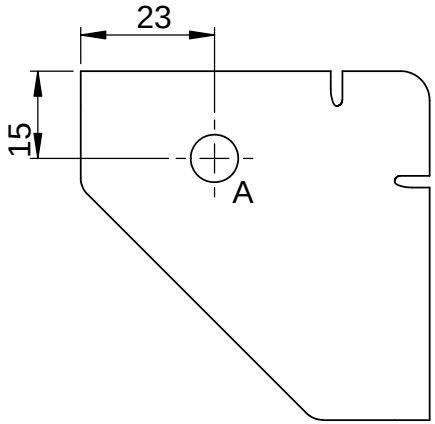

NOTE

1. AVOID SHARP CORNERS AND EDGES
2. BURRS MUST BE REMOVED
3. M8x15mm HEIGHT SS BLIND NUT TO BE WELDED ON THE BOTTOM SIDE OF GUSSET IN LINE WITH HOLE 'A'

REV	CN.NO.	DATE	DESCRIPTION	CHECKED	APPROVED	NEXT ASSEMBLY	ITEM	QTY
4								
3								
2								
1								
0		12.08.17	ORIGINAL			DSA 36 109 0 018	2	2

MATERIAL	FINISH	PROJ.	TOL.GEN. ± IS: 2102 TOL.AXIS. ± (MED.)	PRJ.
SS 316	--			109

DRAWN	CHECKED	APPROVED	DIMNS	SCALE	TITLE
MALIKSAD			mm	NTS	CORNER GUSSET-1

DATE	DATE	DATE	DRG. NUMBER	SIZE	ISSUE
12.08.17			DPD 36 109 0 088	A4	1

KERALA STATE ELECTRONICS DEVELOPMENT CORPORATION LIMITED

NO.OF SHEETS 1 / 1

RESTRICTED

RESTRICTED

SL NO	REF	DESCRIPTION	QTY
1	A	∅8.2	1
2	B	∅6	4

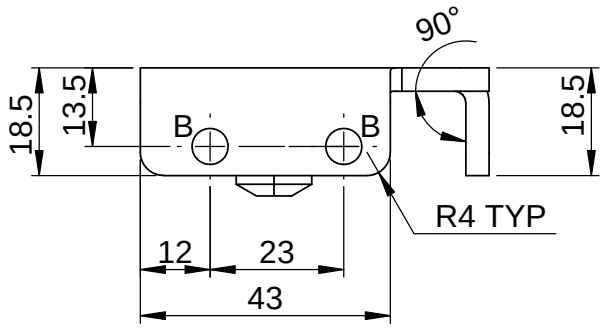

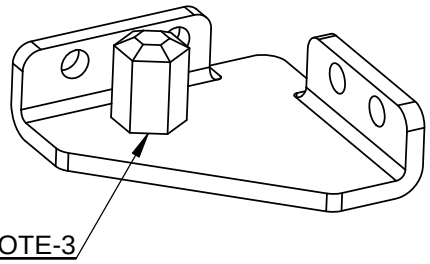

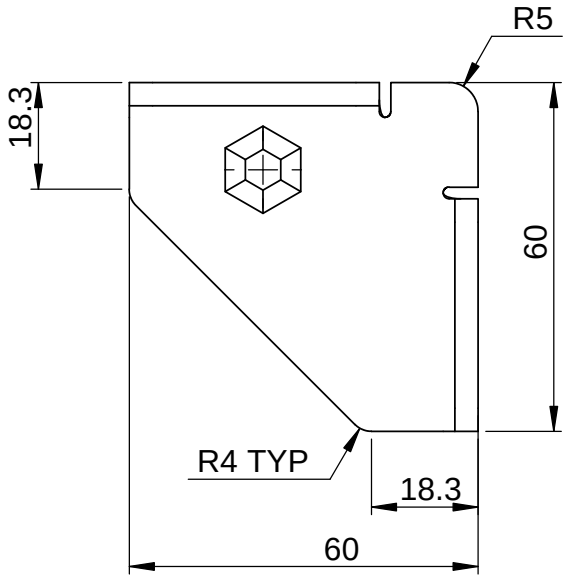

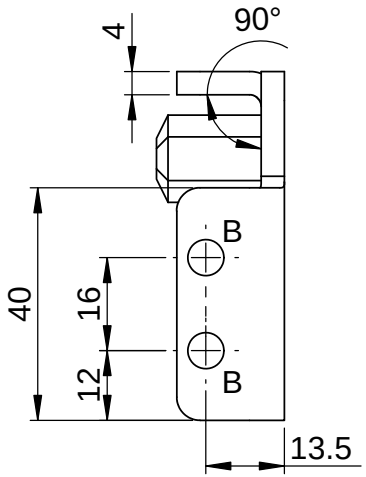

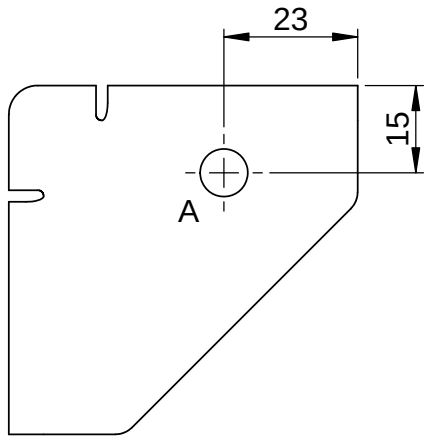

NOTE

1. AVOID SHARP CORNERS AND EDGES
2. BURRS MUST BE REMOVED
3. M8x15mm HEIGHT SS BLIND NUT TO BE WELDED ON THE BOTTOM SIDE OF GUSSET IN LINE WITH HOLE 'A'

REV	CN.NO.	DATE	DESCRIPTION	CHECKED	APPROVED	NEXT ASSEMBLY	ITEM	QTY
4								
3								
2								
1								
0		12.08.17	ORIGINAL			DSA 36 109 0 020	4	2

MATERIAL	FINISH	PROJ.		PRJ.
SS 316	--		TOL.GEN. ± IS: 2102 TOL.AXIS. ± (MED.)	109

DRAWN	CHECKED	APPROVED	DIMNS	SCALE	TITLE
MALIKSAD			mm	NTS	CORNER GUSSET-2
DATE 12.08.17	DATE	DATE	DRG. NUMBER		SIZE: A4 / ISSUE: 1
KERALA STATE ELECTRONICS DEVELOPMENT CORPORATION LIMITED			DPD 36 109 0 090		NO.OF SHEETS: 1 / 1

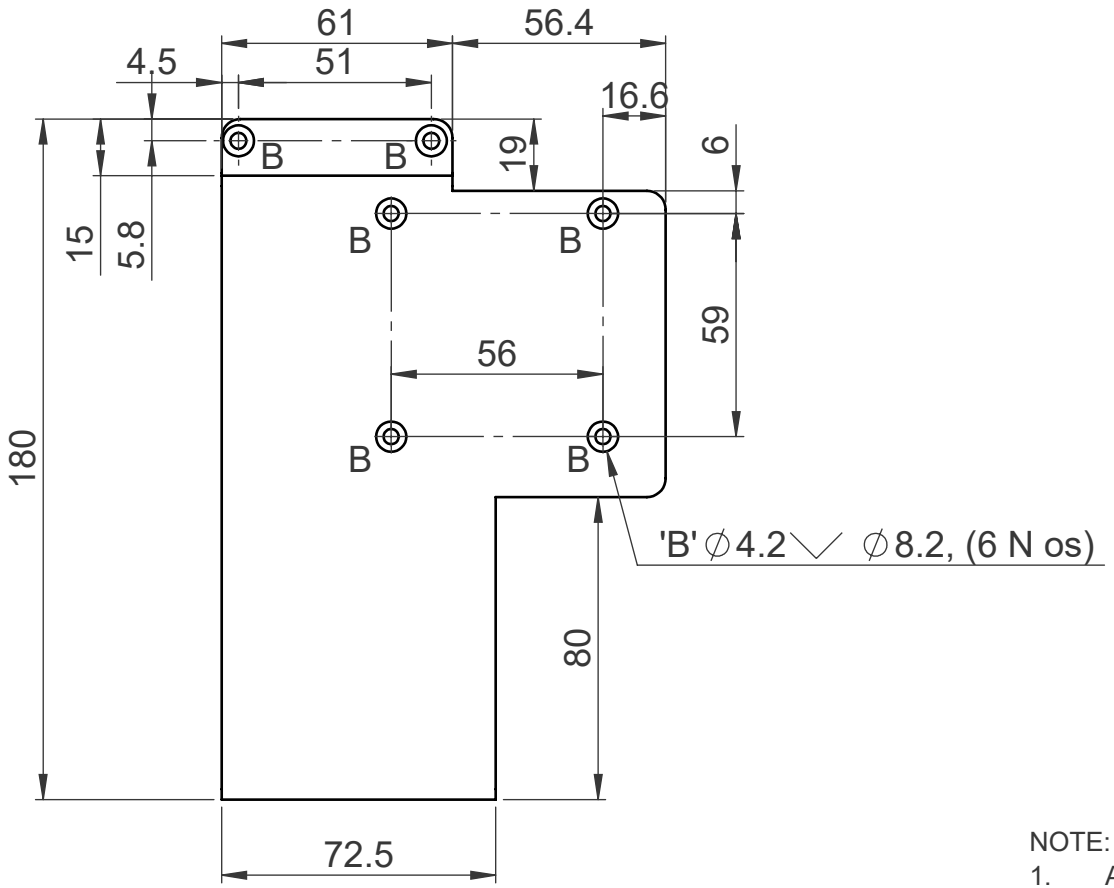

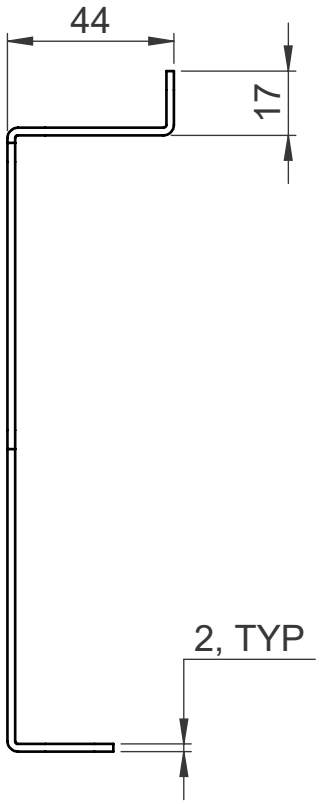

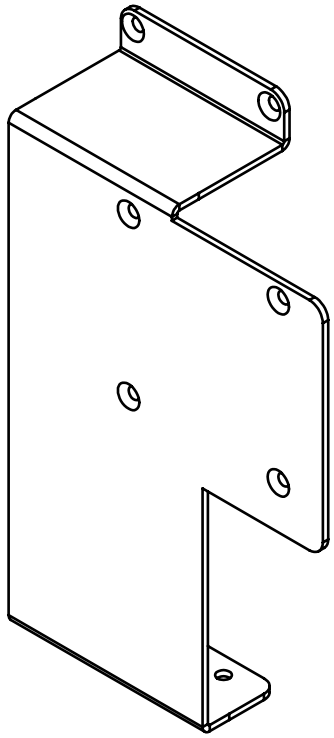

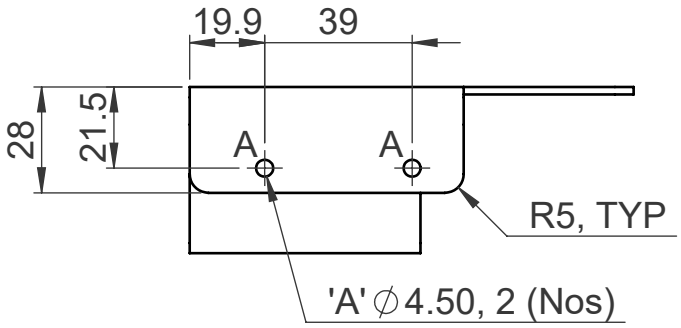

NOTE:
1. AVOID SHARP EDGES AND CORNERS

REV	CN.NO.	DATE	DESCRIPTION	CHECKED	APPROVED	NEXT ASSEMBLY	ITEM	QTY
4								
3								
2								
1								
0		03.07.23	ORIGINAL			-	-	-

MATERIAL: ALUMINIUM ALLOY 5052-H32	FINISH: YELLOW CC COATING	PROJ.	TOL.GEN. ± IS: 2102 TOL.AXIS. ± (MED.)	PRJ. 109	
DRAWN: NANDHU	CHECKED	APPROVED	DIMNS: mm / SCALE: NTS	TITLE: DC-DC CONVERTER FIXING PLATE	
DATE 03.07.23	DATE	DATE	DRG. NUMBER: DPD 36 109 0 347	SIZE: A4	ISSUE: 1
KERALA STATE ELECTRONICS DEVELOPMENT CORPORATION LIMITED				NO.OF SHEETS: 1 / 1	

RESTRICTED

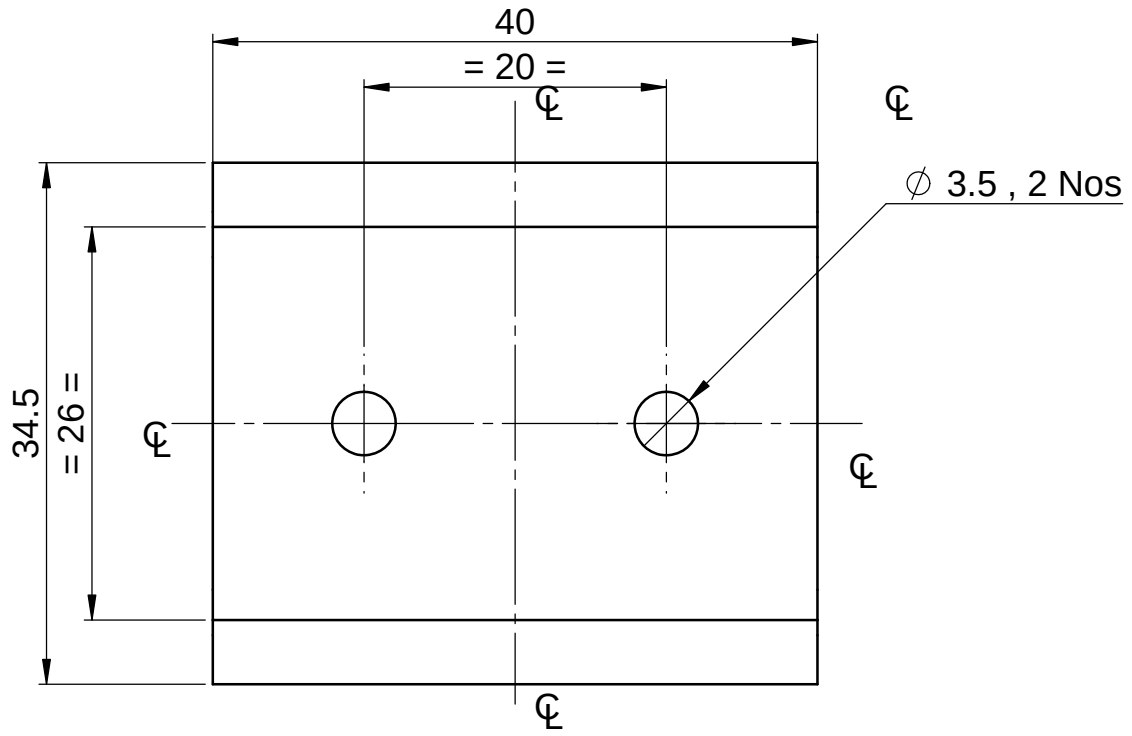

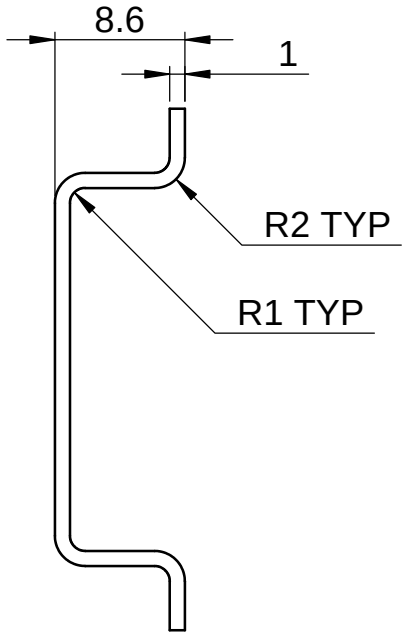

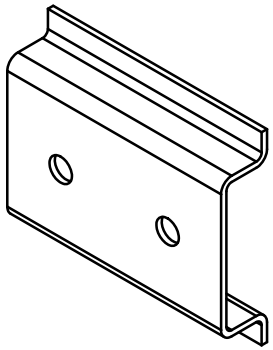

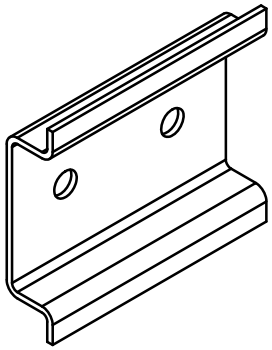

NOTE

1. AVOID SHARP CORNERS AND EDGES

REV	CN.NO.	DATE	DESCRIPTION	CHECKED	APPROVED	NEXT ASSEMBLY	ITEM	QTY
4								
3								
2								
1								
0		10.11.16	ORIGINAL			DSA 36 109 0 012		1

MATERIAL	FINISH	PROJ.		PRJ.
1 mm SS 316 SHEET	-		TOL.GEN. ± IS: 2102 TOL.AXIS. ± (MED.)	109

DRAWN	CHECKED	APPROVED	DIMNS	SCALE	TITLE
MALIKSAD			mm	NTS	DIN RAIL
DATE 10.11.16	DATE	DATE	DRG. NUMBER		SIZE / ISSUE
KERALA STATE ELECTRONICS DEVELOPMENT CORPORATION LIMITED			DPD 36 109 0 119		A4 / 1
					NO.OF SHEETS 1 / 1

RESTRICTED

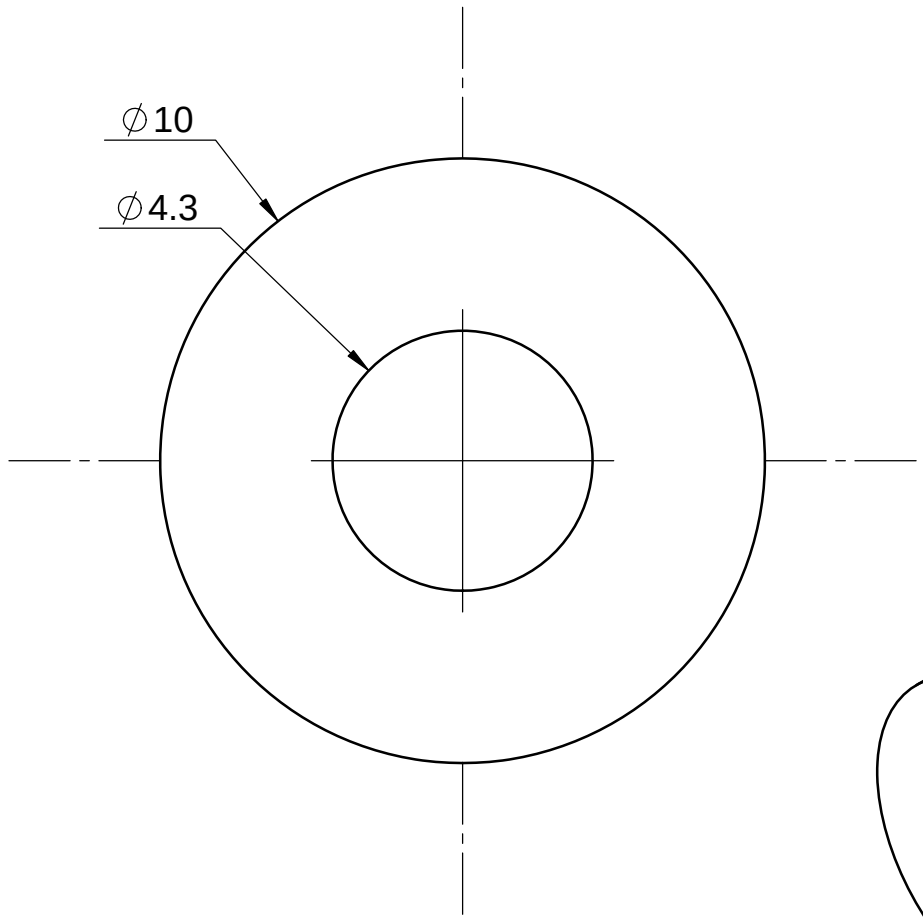

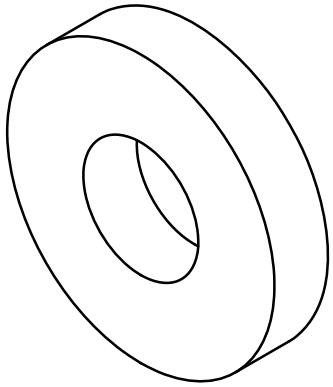

REV	CN.NO.	DATE	DESCRIPTION	CHECKED	APPROVED	NEXT ASSEMBLY	ITEM	QTY
4								
3								
2								
1								
0		13.11.19	ORIGINAL			-	-	-

MATERIAL	FINISH	PROJ.		PRJ.
SS-316	-		TOL.GEN. ± IS:2102 TOL.AXIS. ± (MED)	109

DRAWN	CHECKED	APPROVED	DIMNS	SCALE	TITLE
MALIKSAD	MANJULAL	VK	mm	NTS	DOOR LOCKING LEVER WASHER

DATE 13.11.19	DATE	DATE	DRG. NUMBER	SIZE	ISSUE
KERALA STATE ELECTRONICS DEVELOPMENT CORPORATION LIMITED			DPD 36 109 0 278	A4	1
				NO.OF SHEETS	1 / 1

RESTRICTED

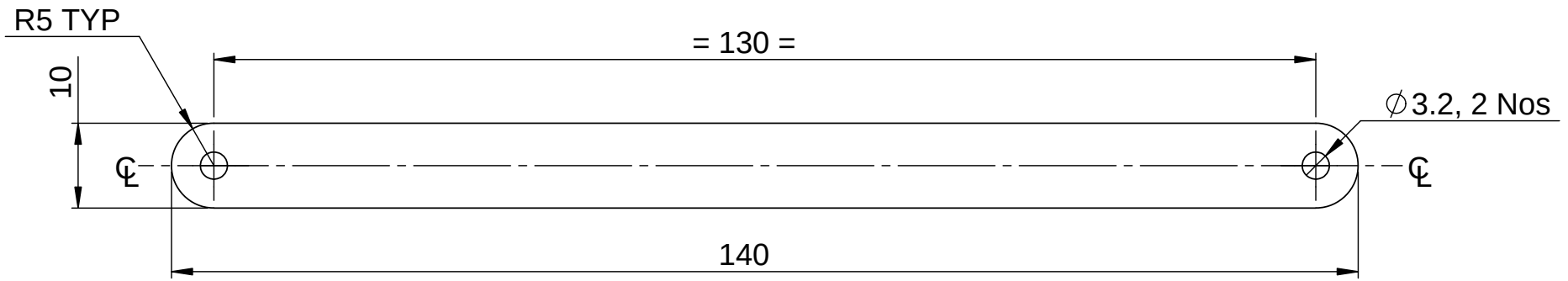

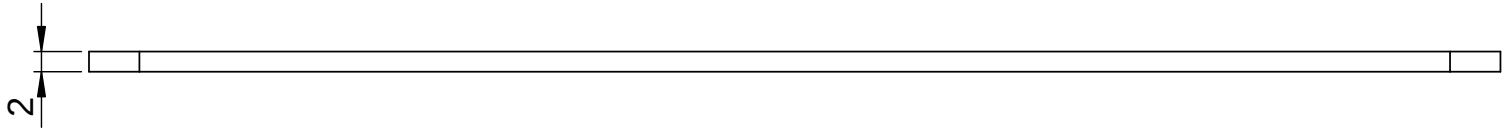

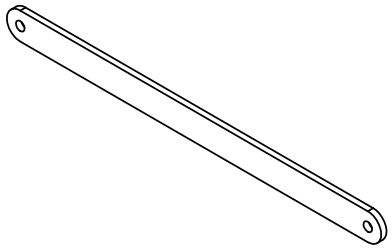

NOTE:

AVOID SHARP EDGES AND CORNERS

REV	CN.NO.	DATE	DESCRIPTION	CHECKED	APPROVED	NEXT ASSEMBLY	ITEM	QTY
4								
3								
2								
1								
0		18.11.17	ORIGINAL			DSA 36 109 0 011	05	01

MATERIAL	FINISH	PROJ.		PRJ.
SS 316 2mm SHEET	-		TOL.GEN. ± IS: 2102 TOL.AXIS. ± (MED.)	109

DRAWN	CHECKED	APPROVED	DIMNS	SCALE	TITLE
MALIKSAD			mm	NTS	DOOR STOPPER LEVER
DATE 18.11.17	DATE	DATE	DRG. NUMBER		SIZE: A4 / ISSUE: 1
KERALA STATE ELECTRONICS DEVELOPMENT CORPORATION LIMITED			DPD 36 109 0 039		NO.OF SHEETS: 1 / 1

RESTRICTED

RESTRICTED

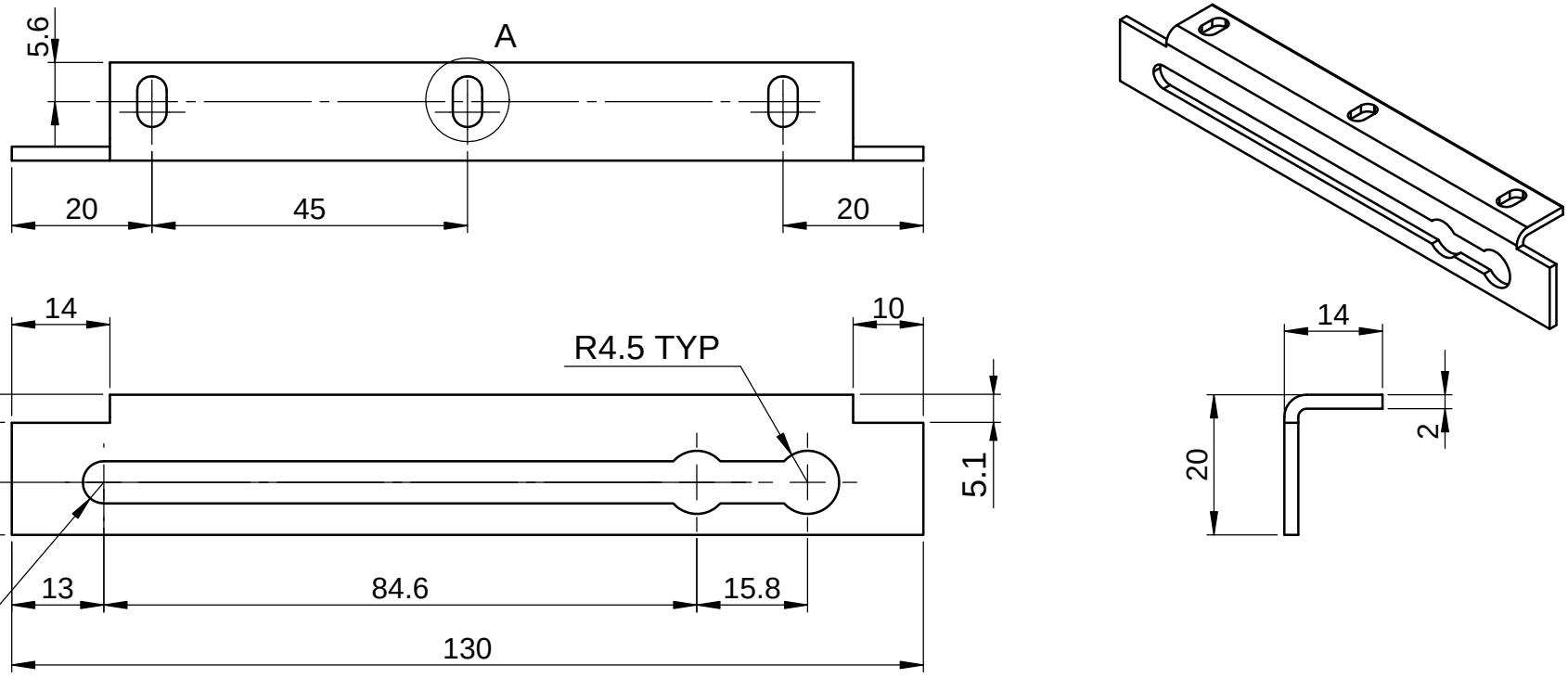

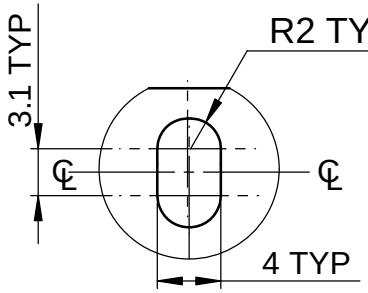

DETAIL A

NOTE:

1. AVOID SHARP EDGES AND CORNERS
2. ALL BURRS MUST BE REMOVED

4								
3								
2								
1								
0		10.10.17	ORIGINAL			DSA 36 109 0 020	20	1
REV	CN.NO.	DATE	DESCRIPTION	CHECKED	APPROVED	NEXT ASSEMBLY	ITEM	QTY

MATERIAL: SS 316	FINISH: --	PROJ.	TOL.GEN. ± IS: 2102 TOL.AXIS. ± (MED.)	PRJ. 109	
DRAWN: MALIKSAD	CHECKED	APPROVED	DIMNS: mm	SCALE: NTS	TITLE: DOOR STOPPER GUIDE
DATE 10.10.17	DATE	DATE	DRG. NUMBER: DPD 36 109 0 112	SIZE: A4	ISSUE: 1
KERALA STATE ELECTRONICS DEVELOPMENT CORPORATION LIMITED				NO.OF SHEETS: 1 / 1	

RESTRICTED

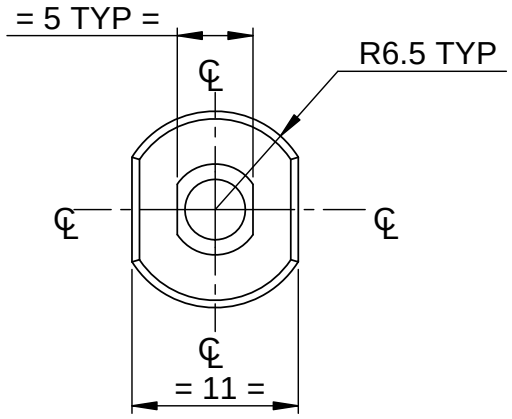

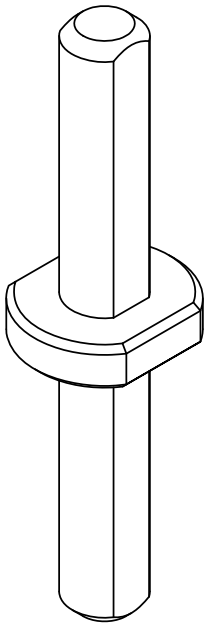

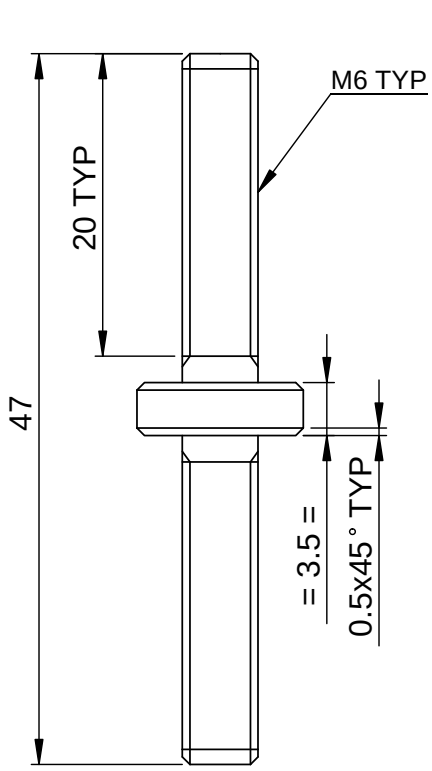

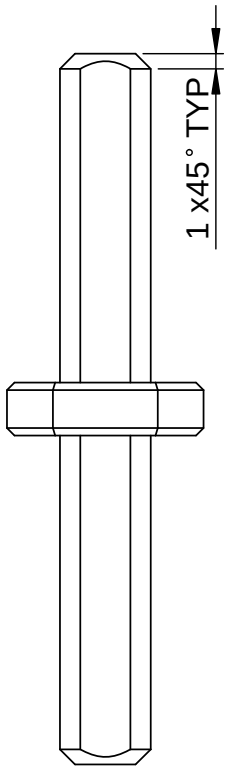

REV	CN.NO.	DATE	DESCRIPTION	CHECKED	APPROVED	NEXT ASSEMBLY	ITEM	QTY
4								
3								
2								
1								
0		18.09.17	ORIGINAL			DSA 36 109 0 016	3	1

MATERIAL	FINISH	PROJ.		PRJ.
BRASS	--		TOL.GEN. ± IS:2102 TOL.AXIS. ± (MED)	109

DRAWN	CHECKED	APPROVED	DIMNS	SCALE	TITLE
MALIKSAD			mm	NTS	EARTH STUD
DATE 18.09.17	DATE	DATE			

KERALA STATE ELECTRONICS DEVELOPMENT CORPORATION LIMITED.

DRG. NUMBER: DPD 36 109 0 115

SIZE	ISSUE
A4	1
NO.OF SHEETS	1 / 1

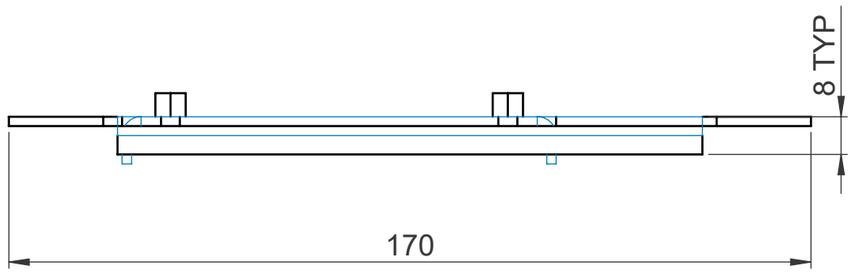

DETAIL C

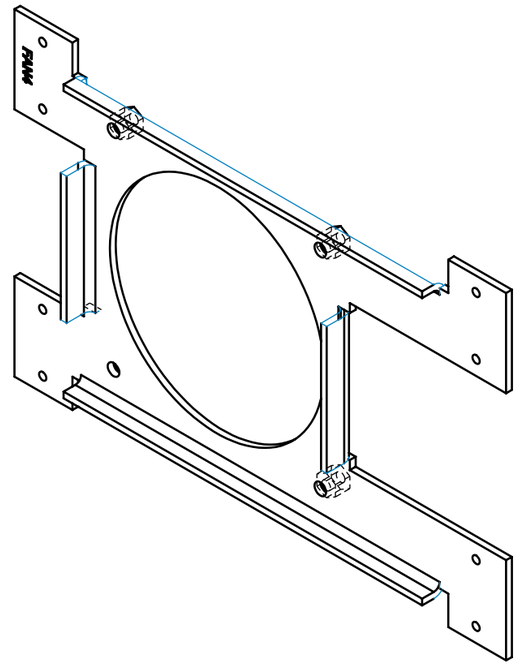

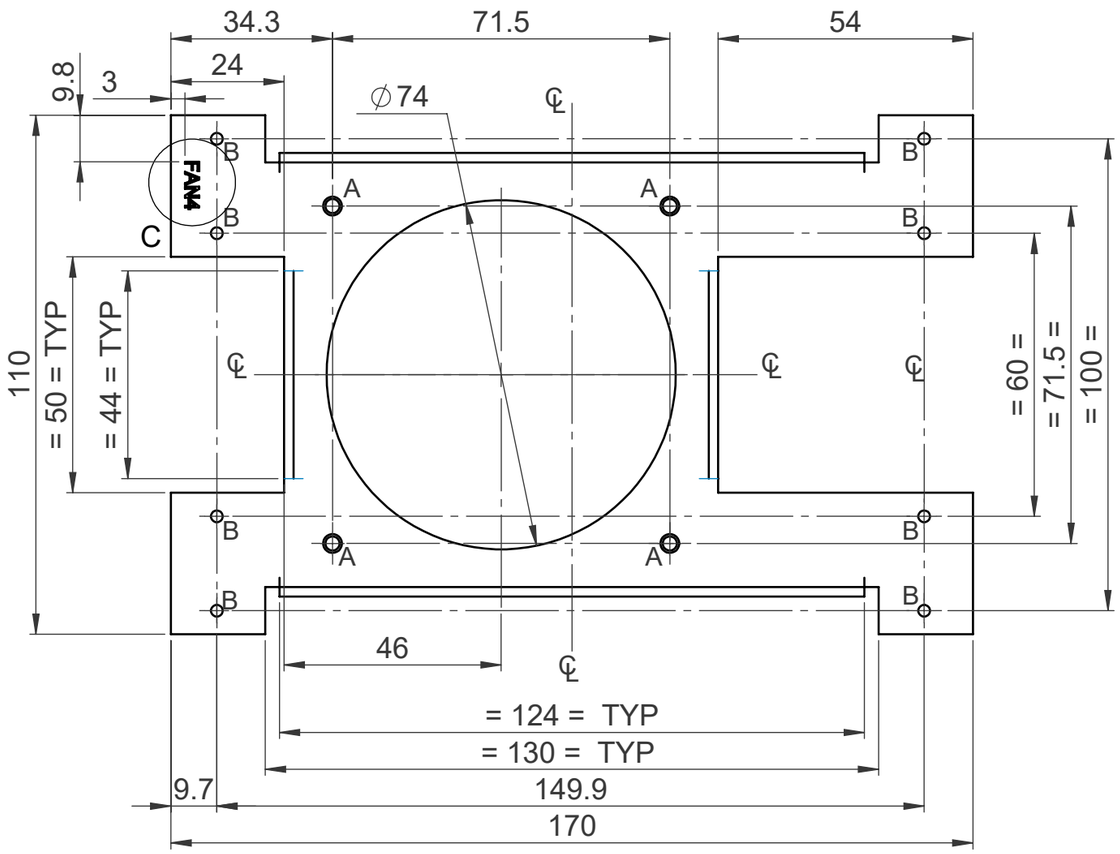

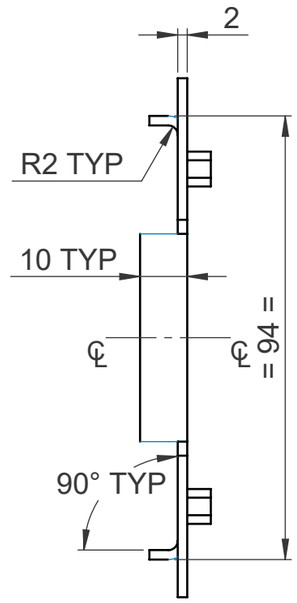

NOTE

1. AVOID SHARP CORNERS AND EDGES
2. ALL BURRS MUST BE REMOVED

2

SL NO	REF	DESCRIPTION	QTY
1	A	M4 RIVET NUT	4
2	B	∅2.5	8

REV	CN.NO.	DATE	DESCRIPTION	CHECKED	APPROVED	NEXT ASSEMBLY	ITEM	QTY
4								
3								
2								
⚠	357	06.05.23	REVISED					
0		19.08.17	ORIGINAL			DSA 36 109 0 012	18	1

MATERIAL	FINISH	PROJ.		PRJ.
ALUMINIUM H32-5052	YELLOW CC COATING		TOL.GEN. ± IS:2102 TOL.AXIS. ± (MED)	109

DRAWN	CHECKED	APPROVED	DIMNS	SCALE	TITLE
MALIKSAD			mm	NTS	FAN CLAMP
DATE 06.05.23	DATE	DATE			

KERALA STATE ELECTRONICS DEVELOPMENT CORPORATION LIMITED

DRG. NUMBER: DPD 36 109 0 069

SIZE	ISSUE
A3	1
NO.OF SHEETS	1 / 1

RESTRICTED

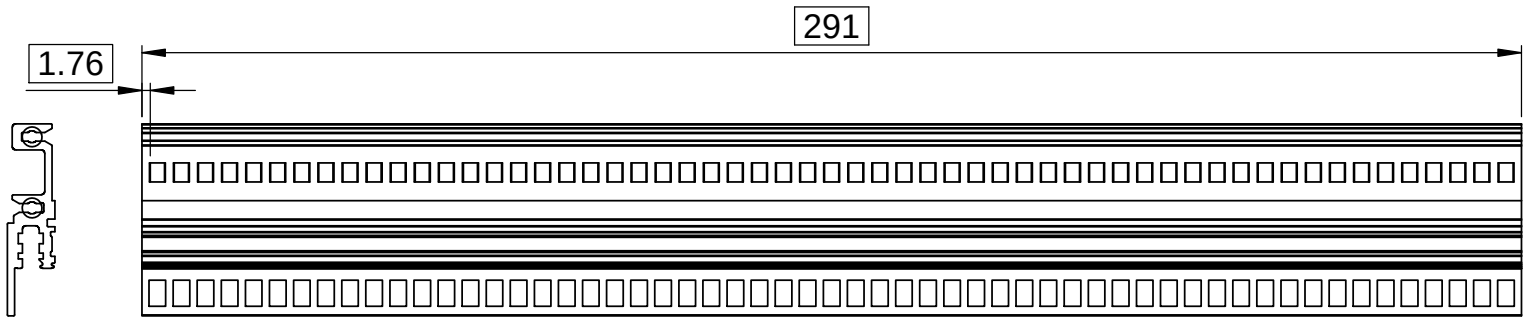

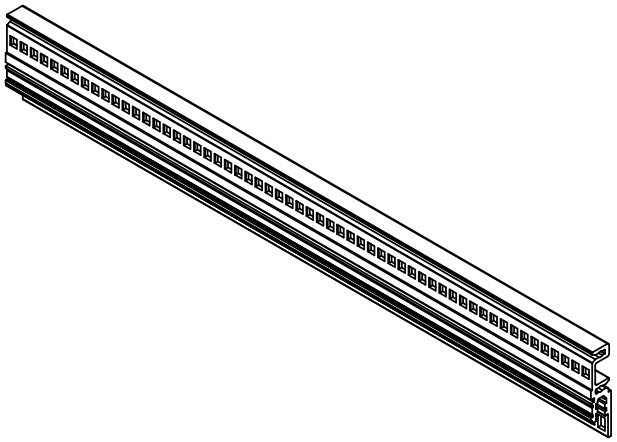

NOTE:

AVOID SHARP EDGES AND CORNERS

REV	CN.NO.	DATE	DESCRIPTION	CHECKED	APPROVED	NEXT ASSEMBLY	ITEM	QTY
4								
3								
2								
1								
0		19.08.17	ORIGINAL			DSA 36 109 0 012	36	1

MATERIAL	FINISH	PROJ.	TOL.GEN. ± IS: 2102 TOL.AXIS. ± (MED.)	PRJ.
STANDARD PROFILE SCHROFF PART NO:34560-363	-			109

DRAWN	CHECKED	APPROVED	DIMNS	SCALE	TITLE
MALIKSAD			mm	NTS	FRONT BOTTOM PROFILE
DATE 19.08.17	DATE	DATE	DRG. NUMBER		SIZE A4 / ISSUE 1
KERALA STATE ELECTRONICS DEVELOPMENT CORPORATION LIMITED			DPD 36 109 0 230		NO.OF SHEETS 1 / 1

RESTRICTED

RESTRICTED

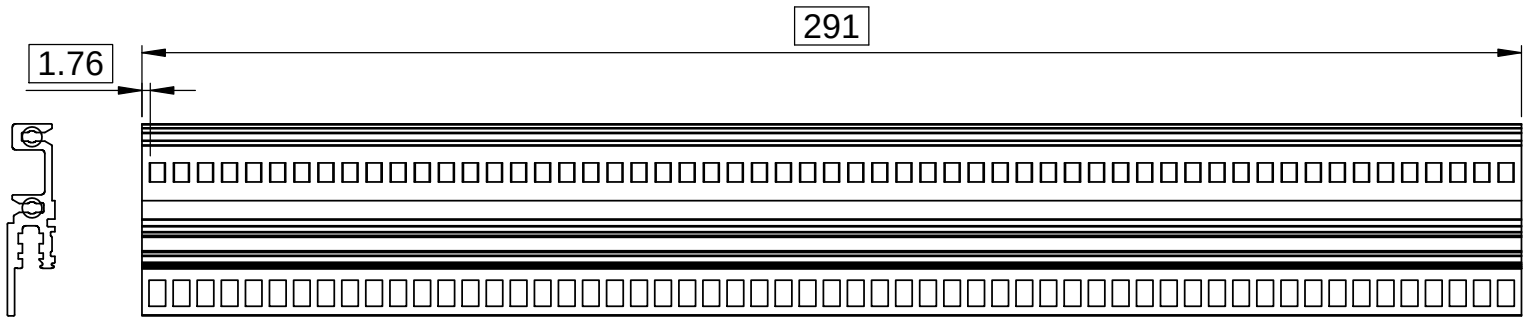

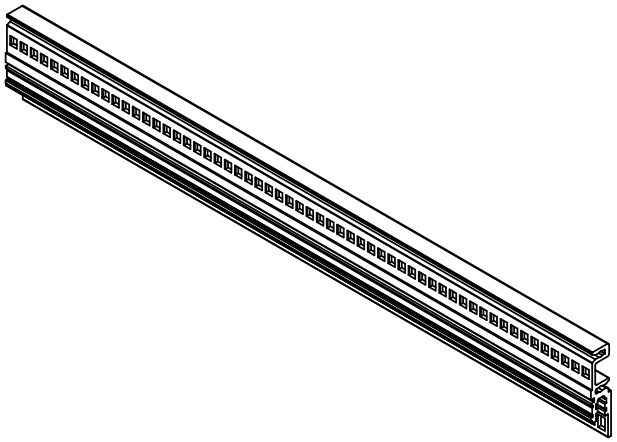

NOTE:

AVOID SHARP EDGES AND CORNERS

REV	CN.NO.	DATE	DESCRIPTION	CHECKED	APPROVED	NEXT ASSEMBLY	ITEM	QTY
4								
3								
2								
1								
0		19.08.17	ORIGINAL			DSA 36 109 0 013	31	1

MATERIAL	FINISH	PROJ.		PRJ.
STANDARD PROFILE SCHROFF PART NO:34560-363	-		TOL.GEN. ± IS: 2102 TOL.AXIS. ± (MED.)	109

DRAWN	CHECKED	APPROVED	DIMNS	SCALE	TITLE
MALIKSAD			mm	NTS	FRONT BOTTOM PROFILE
DATE 19.08.17	DATE	DATE	DRG. NUMBER		SIZE A4 / ISSUE 1
KERALA STATE ELECTRONICS DEVELOPMENT CORPORATION LIMITED			DPD 36 109 0 229		NO.OF SHEETS 1 / 1

RESTRICTED

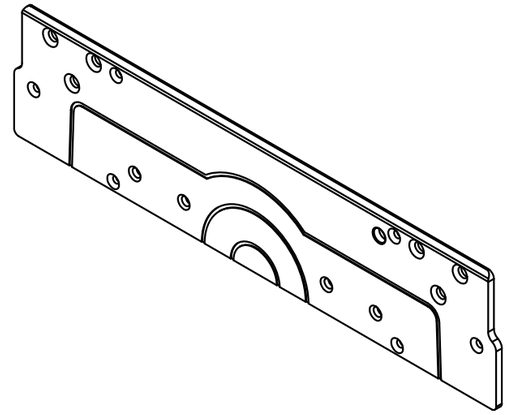

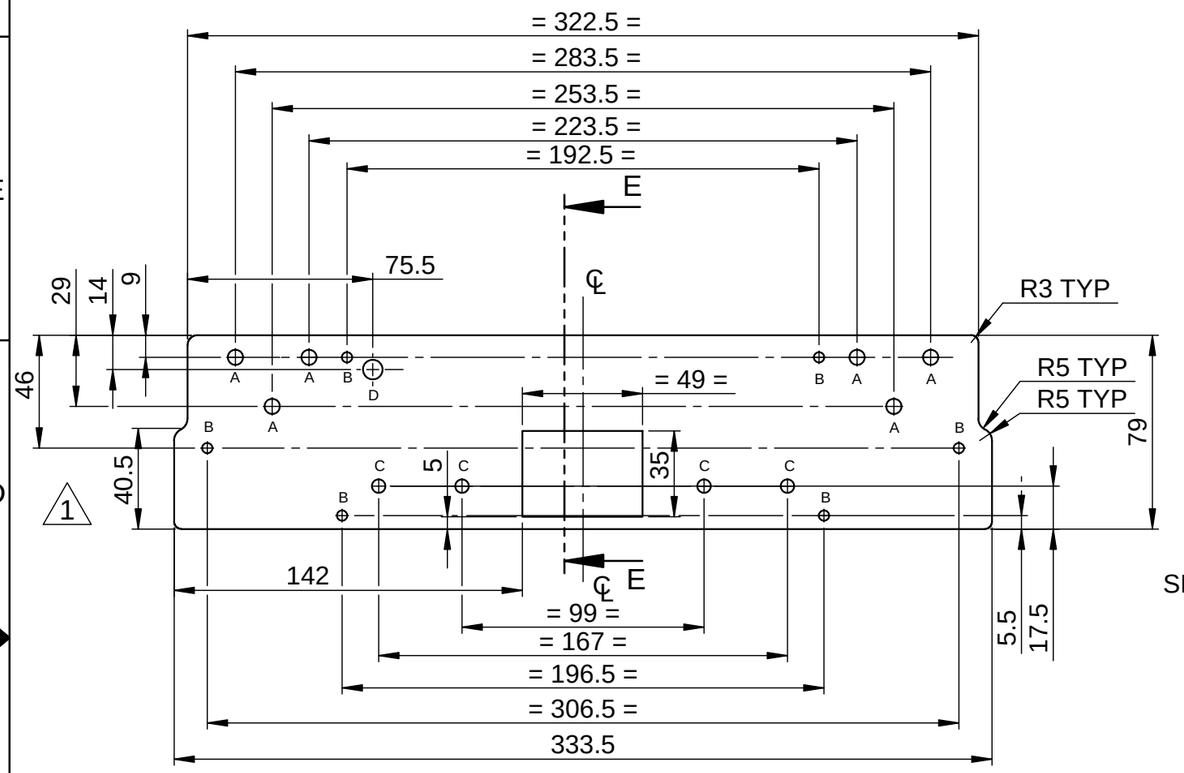

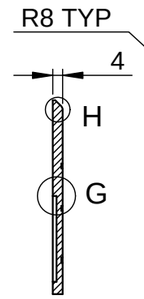

SECTION E-E

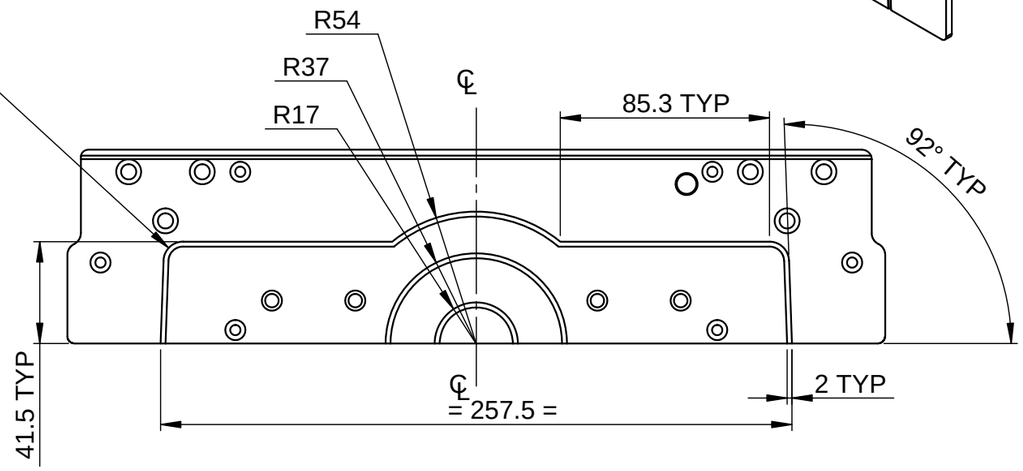

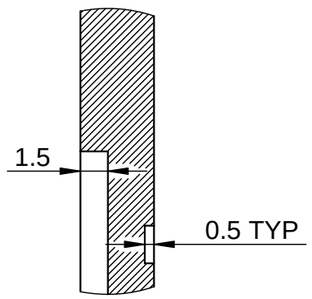

DETAIL G

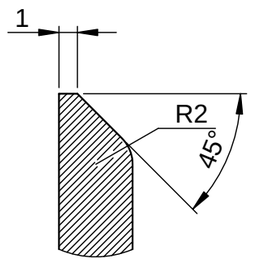

DETAIL H

SL NO	REF	DESCRIPTION	QTY
1	A	∅6.2 ⌵ ∅10.2	6
2	B	∅4.2 ⌵ ∅8.2	6
3	C	∅5.5 ⌵ ∅8.2	4
4	D	∅8	1

NOTE:

1. AVOID SHARP EDGES AND CORNERS.
2. DIMENSIONLESS FEATURES TO BE MEASURED FROM IGS

REV	CN.NO.	DATE	DESCRIPTION	CHECKED	APPROVED	NEXT ASSEMBLY	ITEM	QTY
4								
3								
2								
1		22.08.19	REVISED					
0		09.06.17	ORIGINAL			DSA 36 109 0 022	7	1

MATERIAL: ALUMINIUM HE-30	FINISH: YELLOW CC COATING	PROJ.	TOL.GEN. ± IS:2102 TOL.AXIS. ± (MED)	PRJ. 109	
DRAWN: MALIKSAD	CHECKED	APPROVED	DIMNS: mm / SCALE: NTS	TITLE: FRONT INTERMEDIATE PLATE	
DATE 22.08.19	DATE	DATE	DRG. NUMBER: DPD 36 109 0 106	SIZE: A3	ISSUE: 1
KERALA STATE ELECTRONICS DEVELOPMENT CORPORATION LIMITED.				NO.OF SHEETS: 1 / 1	

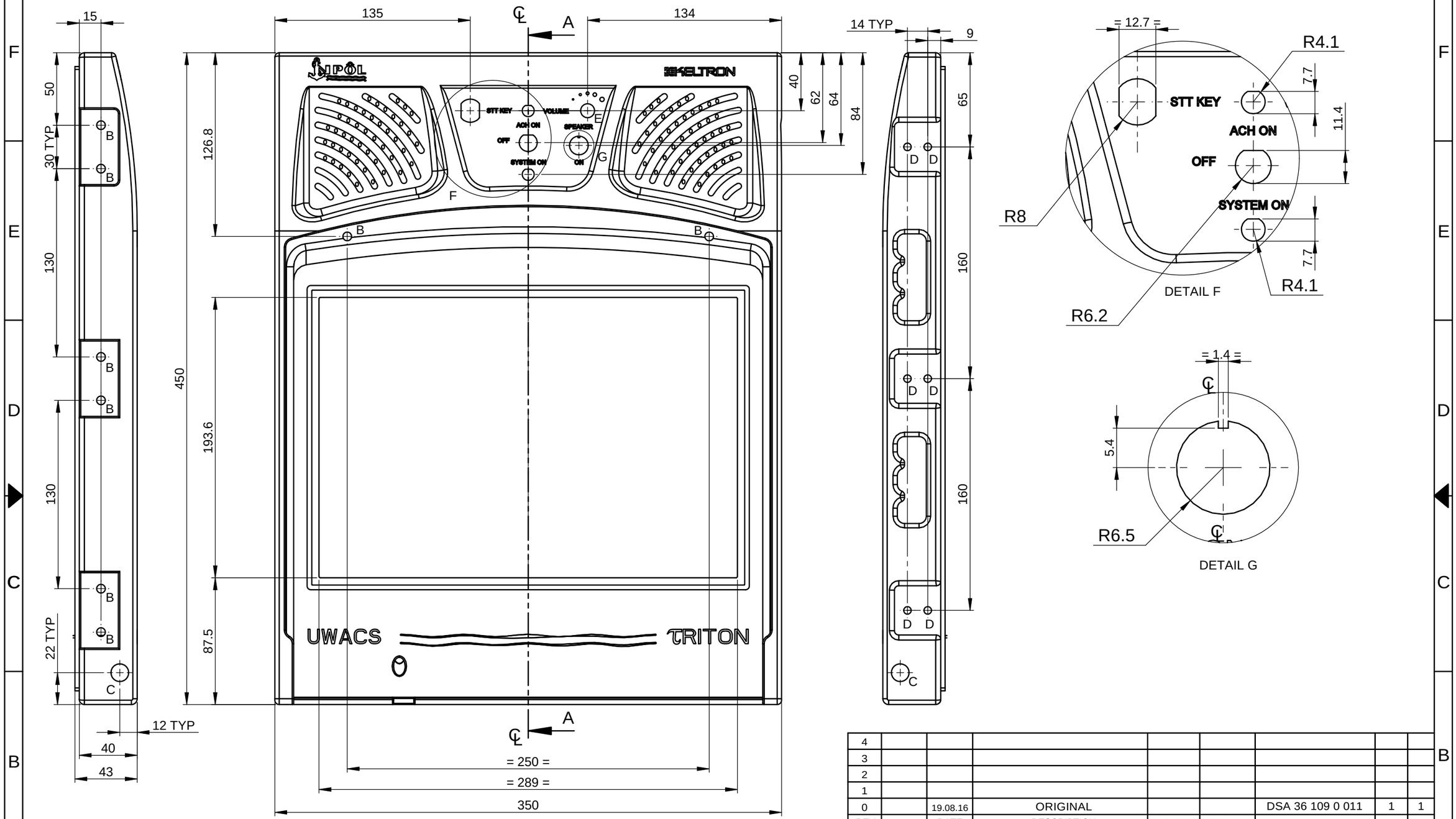

NOTE

1. AVOID SHARP CORNERS AND EDGES
2. ALL BURRS MUST BE REMOVED
3. DIMENSIONLESS FEATURES TO BE MEASURED FROM IGS FILE

REV	CN.NO.	DATE	DESCRIPTION	CHECKED	APPROVED	NEXT ASSEMBLY	ITEM	QTY
4								
3								
2								
1								
0		19.08.16	ORIGINAL			DSA 36 109 0 011	1	1

MATERIAL: ALUMINIUM HE-30	FINISH: YELLOW CC COATING	PROJ.	TOL.GEN. ± IS:2102 TOL.AXIS. ± (MED)	PRJ. 109	
DRAWN: MALIKSAD	CHECKED	APPROVED	DIMNS: mm	SCALE: NTS	TITLE: FRONT PLATE
DATE 19.08.16	DATE	DATE	DRG. NUMBER: DPD 36 109 0 114	SIZE: A3	ISSUE: 1
KERALA STATE ELECTRONICS DEVELOPMENT CORPORATION LIMITED.				NO.OF SHEETS: 1 / 3	

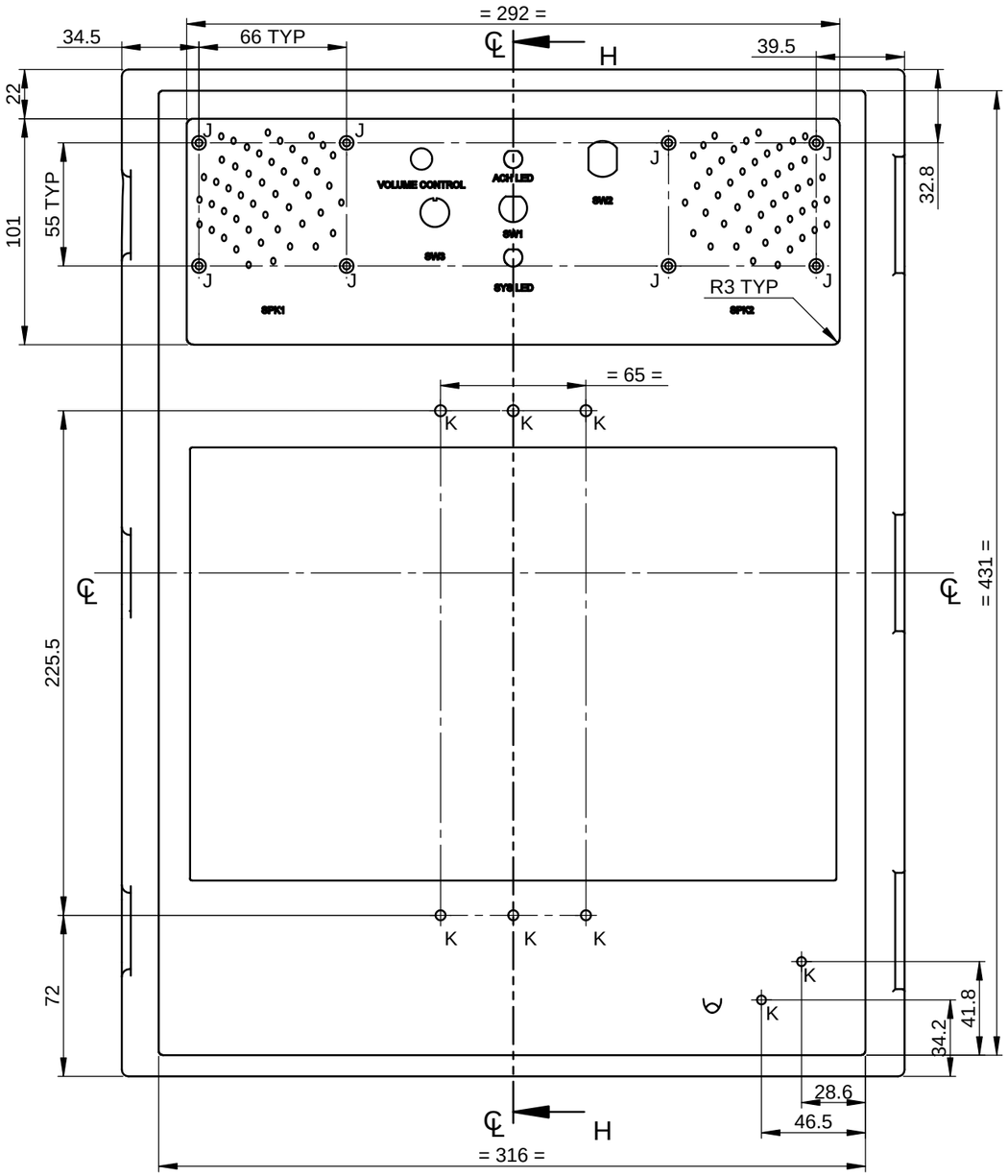

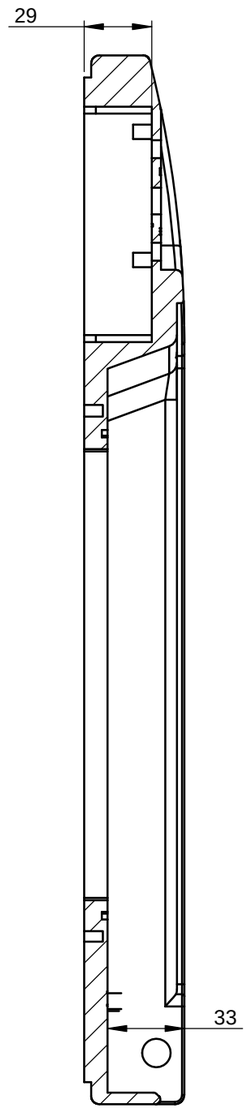

SECTION H-H

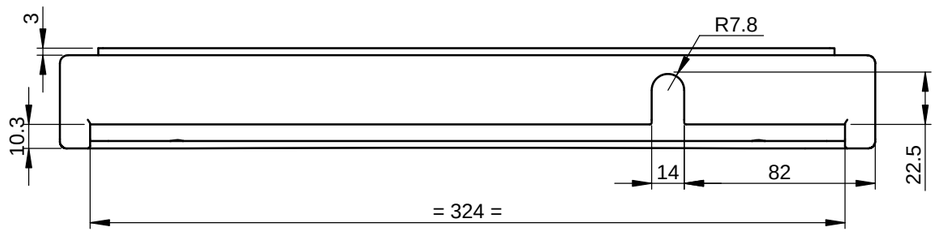

SL NO	REF	DESCRIPTION	QTY
1	B	DRILL ∅6.2↧14, M6 HELICOIL TAP	8
2	C	∅12.2	2
5	D	DRILL ∅5.2↧10, M5 HELICOIL TAP	6
6	E	∅9.6	1
7	J	DRILL ∅3.1↧8, M3 HELICOIL TAP	8
8	K	DRILL ∅4.1↧8, M4 HELICOIL TAP	8

REV	CN.NO.	DATE	DESCRIPTION	CHECKED	APPROVED	NEXT ASSEMBLY	ITEM	QTY
4								
3								
2								
1								
0		19.08.16	ORIGINAL			DSA 36 109 0 011	1	1

MATERIAL: ALUMINIUM HE-30	FINISH: YELLOW CC COATING	PROJ.	TOL.GEN. ± IS:2102 TOL.AXIS. ± (MED)	PRJ. 109	
DRAWN: MALIKSAD	CHECKED	APPROVED	DIMNS: mm	SCALE: NTS	TITLE: FRONT PLATE
DATE 19.08.16	DATE	DATE			

KERALA STATE ELECTRONICS DEVELOPMENT CORPORATION LIMITED.

DRG. NUMBER: DPD 36 109 0 114

SIZE	ISSUE
A3	1
NO.OF SHEETS	2 / 3

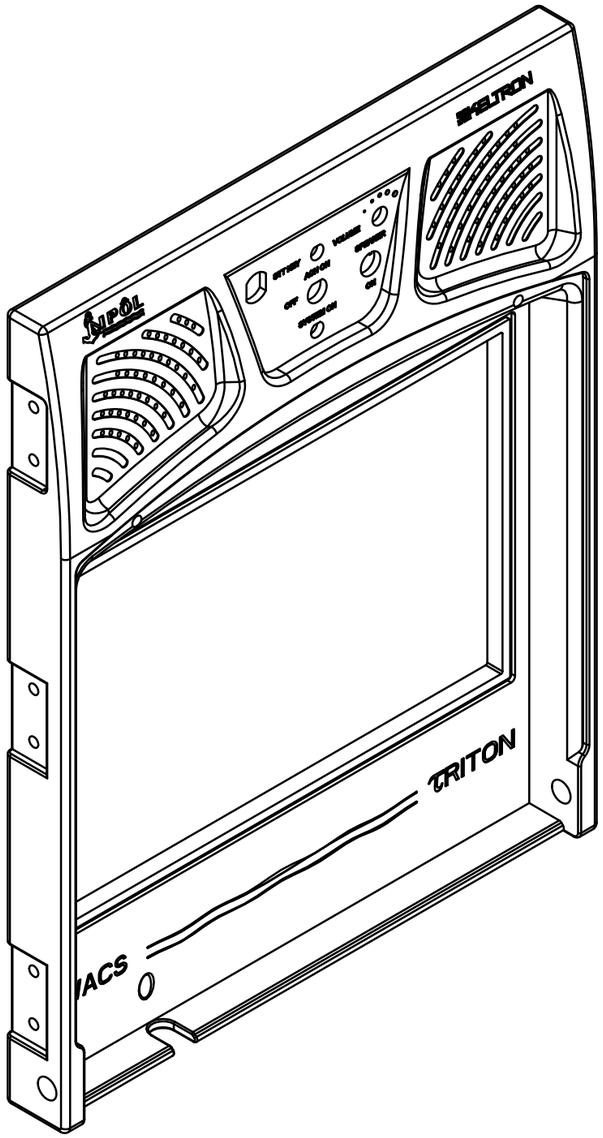

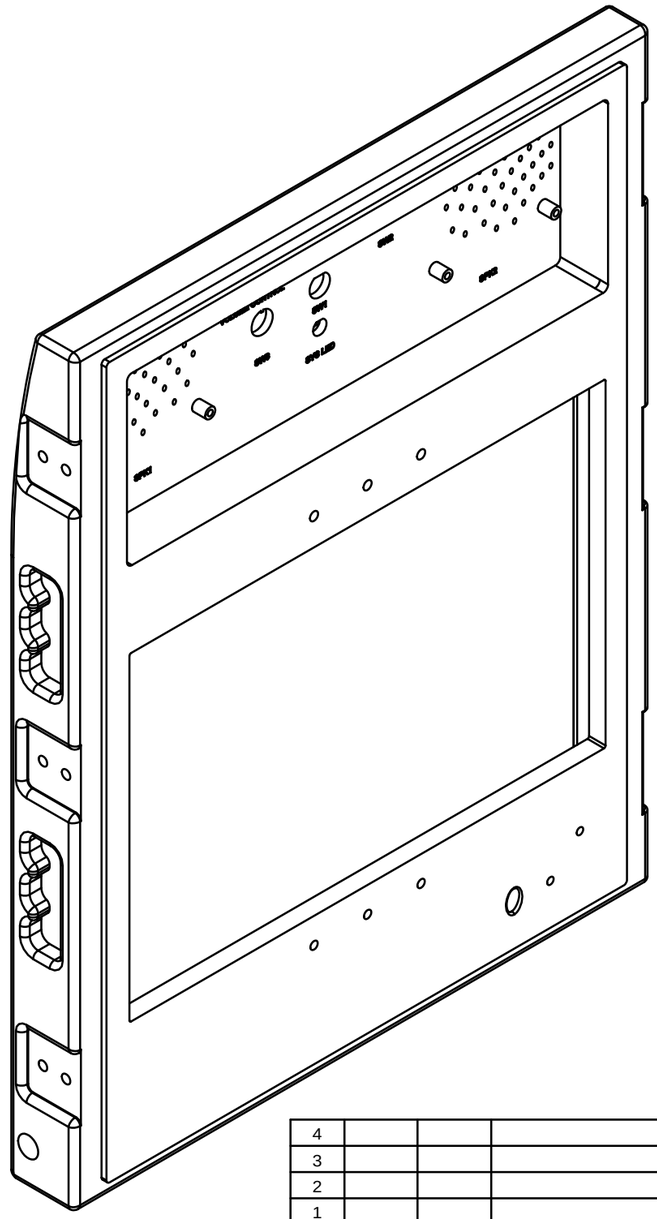

4								
3								
2								
1								
0		19.08.16	ORIGINAL			DSA 36 109 0 011	1	1
REV	CN.NO.	DATE	DESCRIPTION	CHECKED	APPROVED	NEXT ASSEMBLY	ITEM	QTY

MATERIAL: ALUMINIUMHE-30	FINISH: YELLOW CC COATING	PROJ.	TOL.GEN. ± IS:2102 TOL.AXIS. ± (MED)	PRJ. 109		
DRAWN: MALIKSAD	CHECKED	APPROVED	DIMNS: mm	SCALE: NTS	TITLE: FRONT PLATE	
DATE 19.08.16	DATE	DATE				
KERALA STATE ELECTRONICS DEVELOPMENT CORPORATION LIMITED.			DRG. NUMBER: DPD 36 109 0 114		SIZE: A3	ISSUE: 1
					NO.OF SHEETS: 3 / 3	

RESTRICTED

RESTRICTED

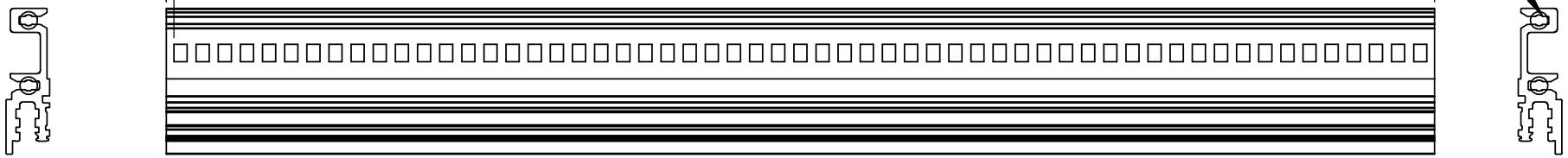

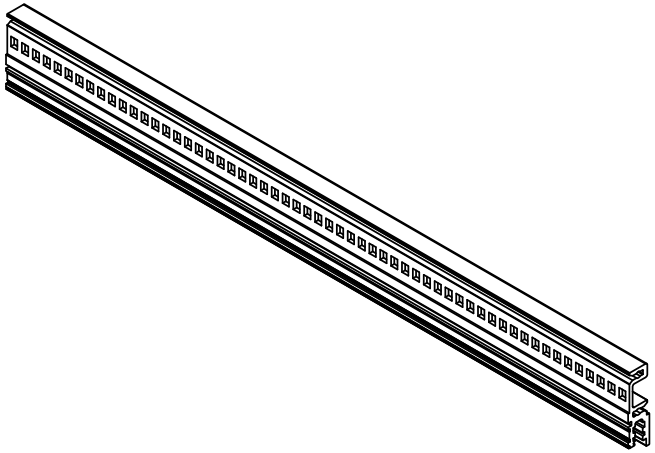

NOTE:

AVOID SHARP EDGES AND CORNERS

REV	CN.NO.	DATE	DESCRIPTION	CHECKED	APPROVED	NEXT ASSEMBLY	ITEM	QTY
4								
3								
2								
1								
0		19.08.17	ORIGINAL			DSA 36 109 0 012	9	1

MATERIAL: STANDARD PROFILE SCHROFF PART NO:34560-263	FINISH: -	PROJ.	TOL.GEN. ± IS: 2102 TOL.AXIS. ± (MED.)	PRJ. 109	
DRAWN: MALIKSAD	CHECKED	APPROVED	DIMNS: mm / SCALE: NTS	TITLE: FRONT TOP PROFILE	
DATE: 19.08.17	DATE	DATE	DRG. NUMBER: DPD 36 109 0 231	SIZE: A4	ISSUE: 1
KERALA STATE ELECTRONICS DEVELOPMENT CORPORATION LIMITED				NO.OF SHEETS: 1 / 1	

RESTRICTED

RESTRICTED

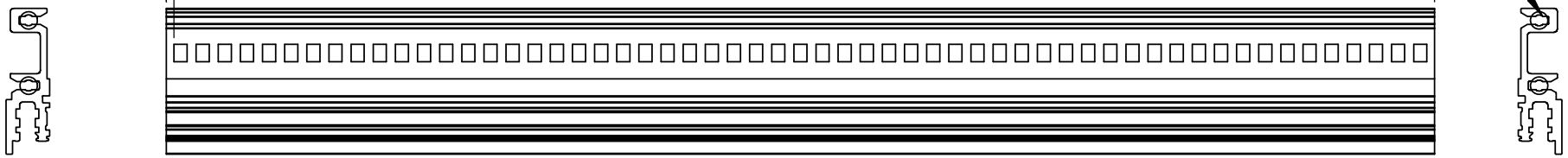

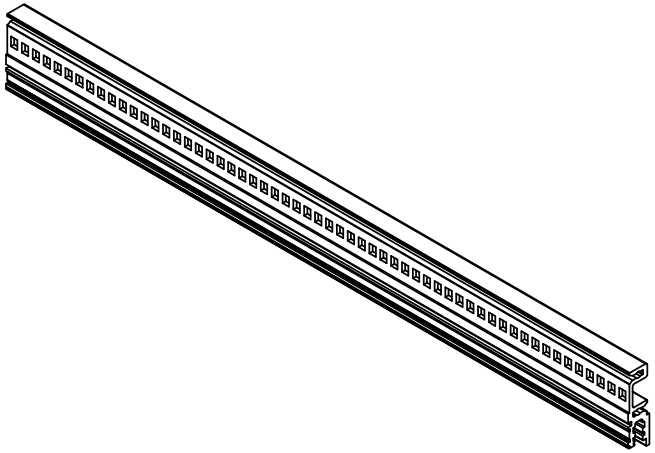

NOTE:

AVOID SHARP EDGES AND CORNERS

REV	CN.NO.	DATE	DESCRIPTION	CHECKED	APPROVED	NEXT ASSEMBLY	ITEM	QTY
4								
3								
2								
1								
0		19.08.17	ORIGINAL			DSA 36 109 0 013	8	1

MATERIAL	FINISH	PROJ.		PRJ.
STANDARD PROFILE SCHROFF PART NO:34560-263	-		TOL.GEN. ± IS: 2102 TOL.AXIS. ± (MED.)	109

DRAWN	CHECKED	APPROVED	DIMNS	SCALE	TITLE
MALIKSAD			mm	NTS	FRONT TOP PROFILE
DATE 19.08.17	DATE	DATE	DRG. NUMBER		SIZE: A4 / ISSUE: 1
KERALA STATE ELECTRONICS DEVELOPMENT CORPORATION LIMITED			DPD 36 109 0 228		NO.OF SHEETS: 1 / 1

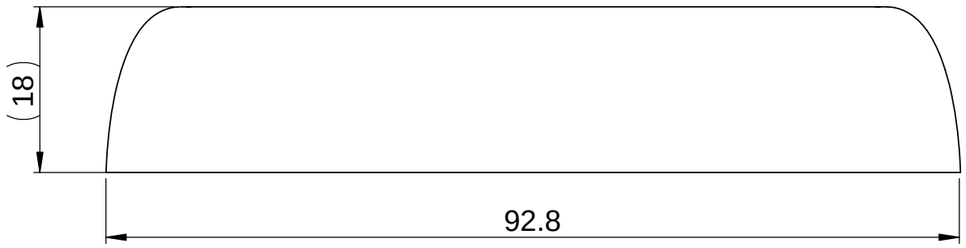

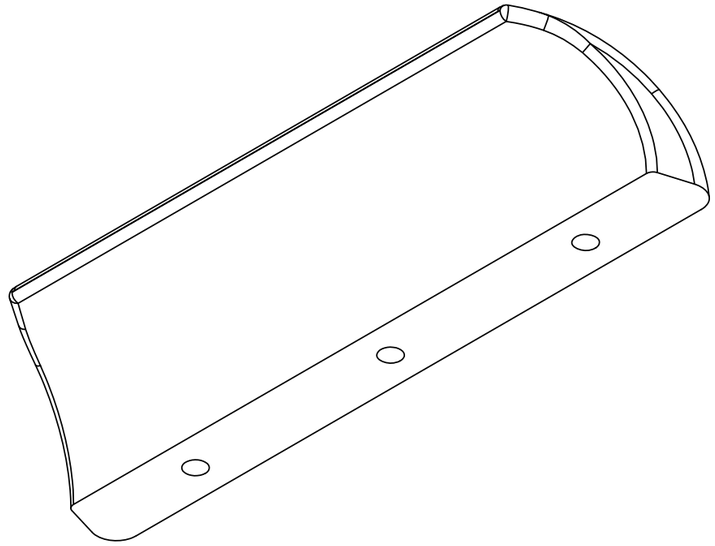

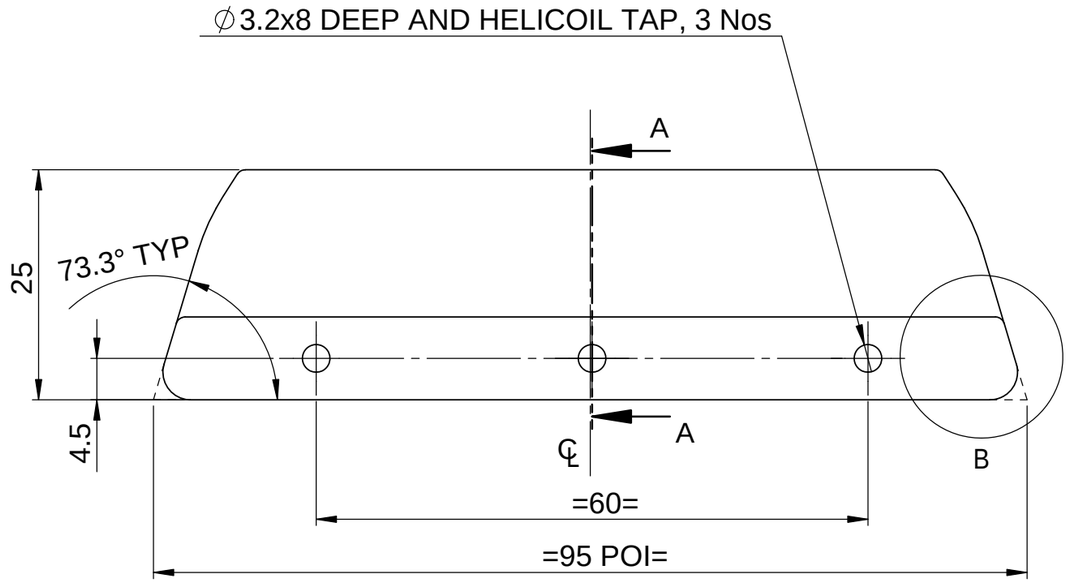

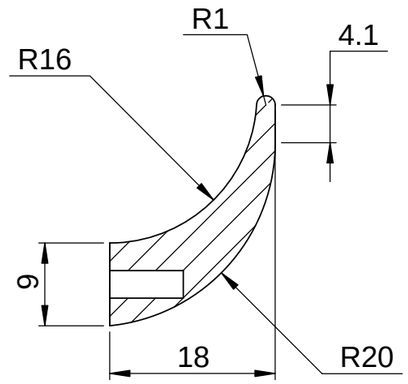

SECTION A-A

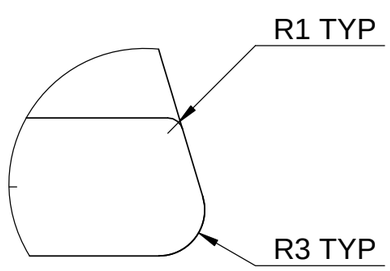

DETAIL B

NOTE

1. AVOID SHARP CORNERS AND EDGES
2. ALL BURRS MUST BE REMOVED

REV	CN.NO.	DATE	DESCRIPTION	CHECKED	APPROVED	NEXT ASSEMBLY	ITEM	QTY
4								
3								
2								
1								
0		04.08.16	ORIGINAL			DSA 36 109 0 022	6	1

MATERIAL: ALUMINIUM HE-30	FINISH: CC COATING	PROJ.	TOL.GEN. ± IS:2102 TOL.AXIS. ± (MED)	PRJ. 109	
DRAWN: THUSHANTH	CHECKED	APPROVED	DIMNS: mm	SCALE: NTS	TITLE: HANDLE
DATE: 04.08.16	DATE	DATE	DRG. NUMBER: DPD 36 109 0 107	SIZE: A3	ISSUE: 1
KERALA STATE ELECTRONICS DEVELOPMENT CORPORATION LIMITED				NO.OF SHEETS: 1 / 1	

RESTRICTED

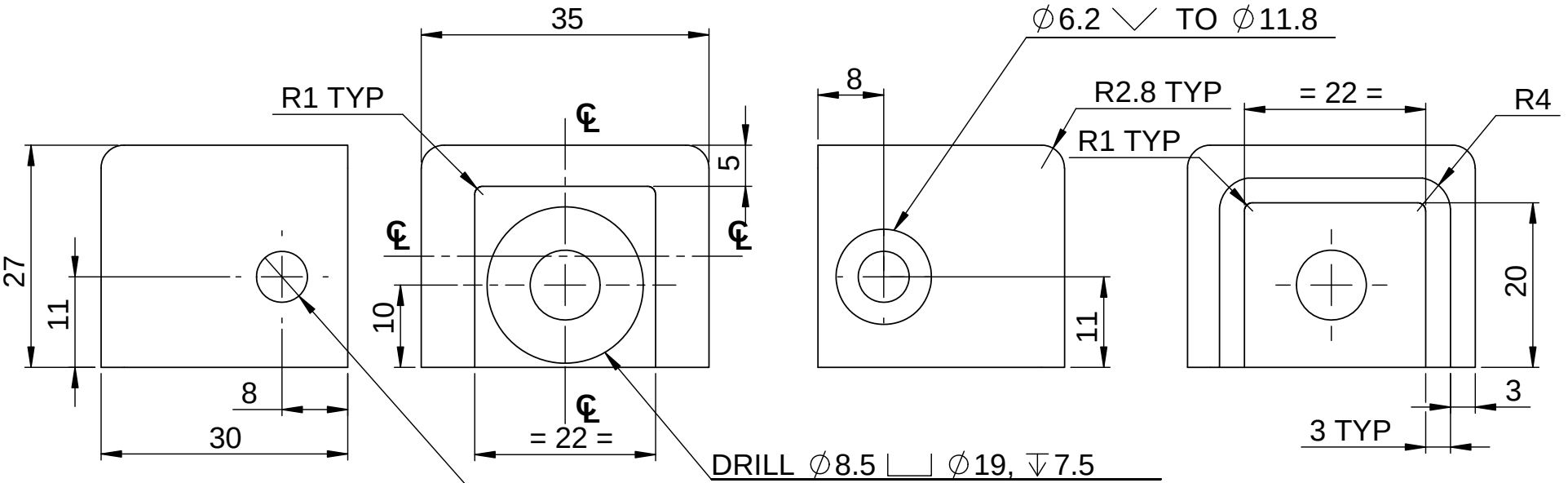

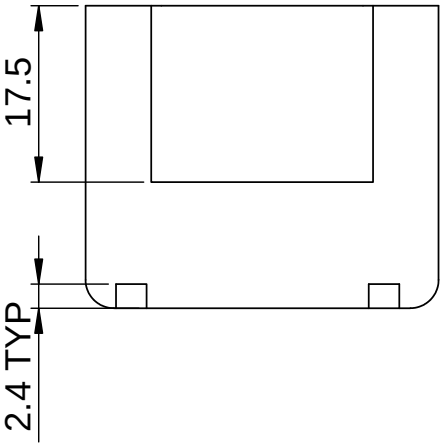

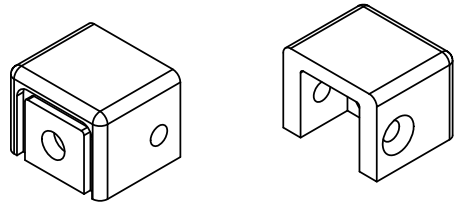

NOTE:

AVOID SHARP EDGES AND CORNERS

REV	CN.NO.	DATE	DESCRIPTION	CHECKED	APPROVED	NEXT ASSEMBLY	ITEM	QTY
4								
3								
2								
1						DSA 36 109 0 015	7	1
0		29.08.17	ORIGINAL			DSA 36 109 0 019	18	1

MATERIAL: ALUMINIUM HE-30	FINISH: YELLOW CC CAOTING	PROJ.	TOL.GEN. ± IS: 2102 TOL.AXIS. ± (MED.)	PRJ. 109

DRAWN	CHECKED	APPROVED	DIMNS	SCALE	TITLE
MALIKSAD			mm	NTS	HANDLE HOLDER-2
DATE 29.08.17	DATE	DATE	DRG. NUMBER		SIZE A4 / ISSUE 1
KERALA STATE ELECTRONICS DEVELOPMENT CORPORATION LIMITED			DPD 36 109 0 047		NO.OF SHEETS 1 / 1

RESTRICTED

RESTRICTED

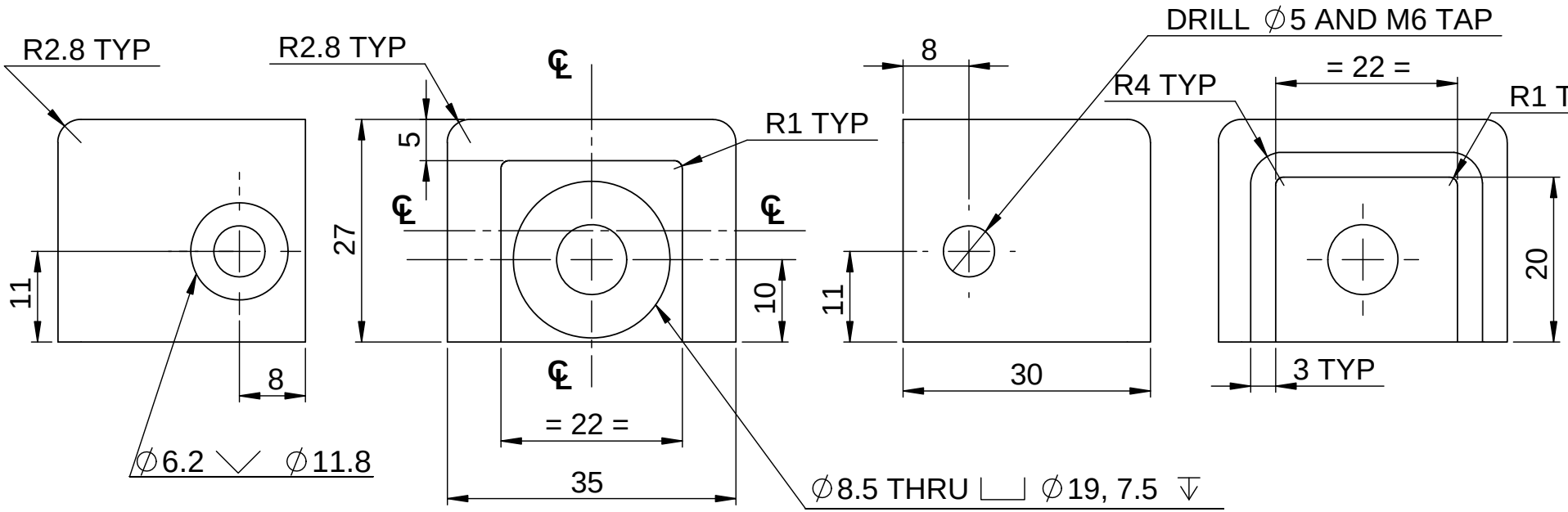

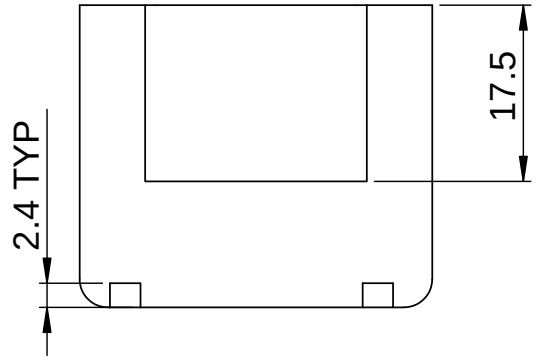

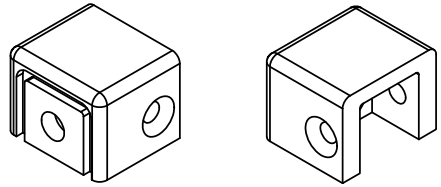

NOTE:

AVOID SHARP EDGES AND CORNERS

REV	CN.NO.	DATE	DESCRIPTION	CHECKED	APPROVED	NEXT ASSEMBLY	ITEM	QTY
4								
3								
2								
1						DSA 36 109 0 015	7	1
0		29.08.17	ORIGINAL			DSA 36 109 0 019	18	1

MATERIAL	FINISH	PROJ.		PRJ.
ALUMINIUM HE-30	YELLOW CC CAOTING		TOL.GEN. ± IS: 2102 TOL.AXIS. ± (MED.)	109

DRAWN	CHECKED	APPROVED	DIMNS	SCALE	TITLE
MALIKSAD			mm	NTS	HANDLE HOLDER-1
DATE 29.08.17	DATE	DATE	DRG. NUMBER		SIZE: A4 / ISSUE: 1
KERALA STATE ELECTRONICS DEVELOPMENT CORPORATION LIMITED			DPD 36 109 0 046		NO.OF SHEETS: 1 / 1

RESTRICTED

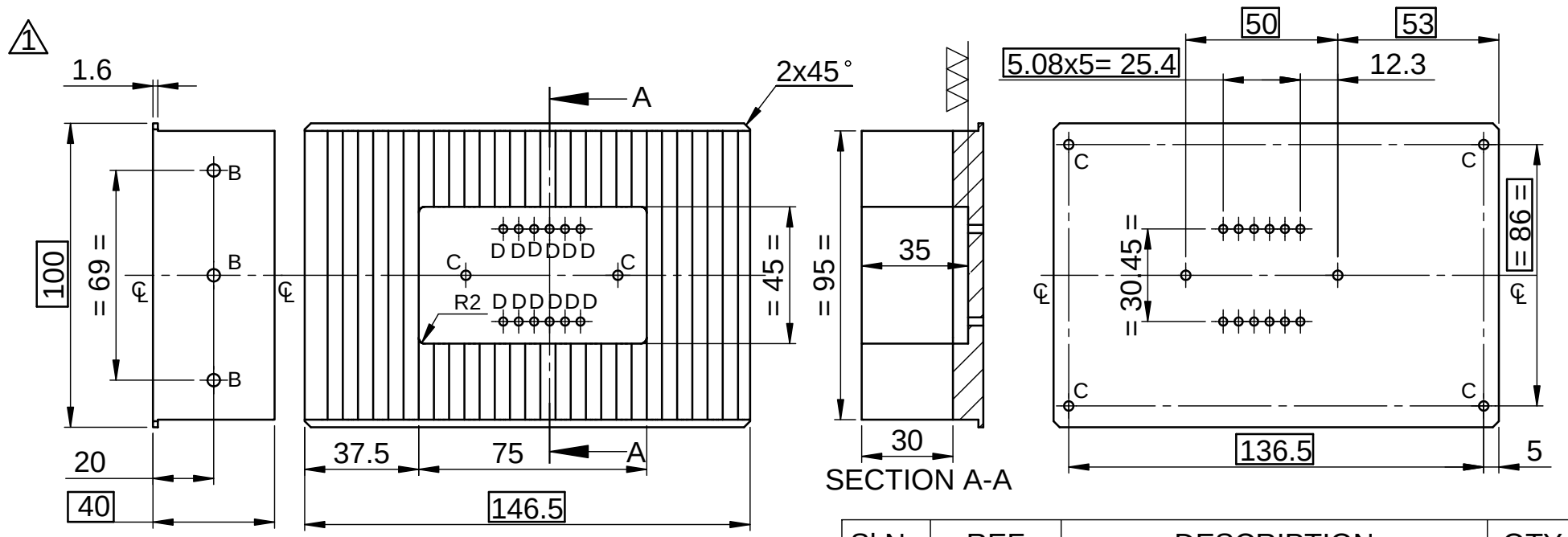

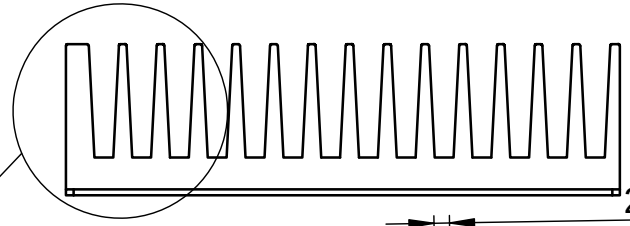

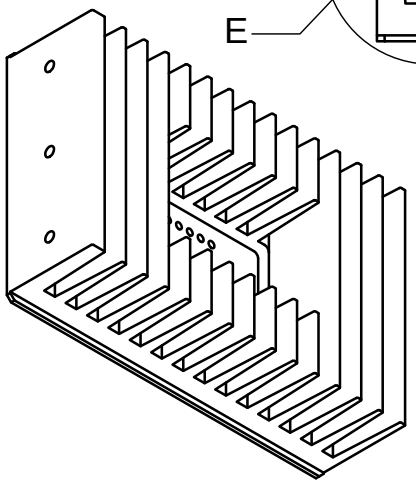

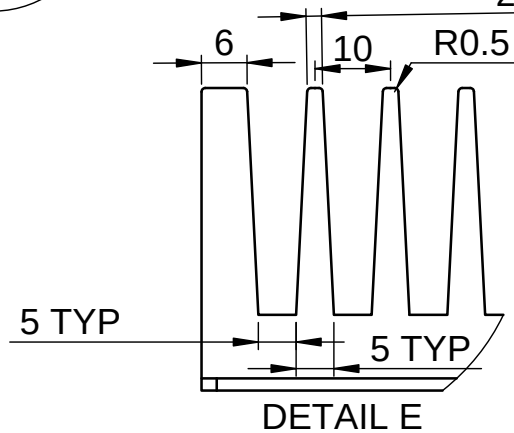

DETAIL E

Sl No	REF	DESCRIPTION	QTY
1	B	DRILL ∅4.1x5↧, M4 HELICOIL TAP	3
2	C	DRILL ∅3.1x5↧, M3 HELICOIL TAP	6
3	D	DRILL ∅2.7	12

REV	CN.NO.	DATE	DESCRIPTION	CHECKED	APPROVED	NEXT ASSEMBLY	ITEM	QTY
4								
3								
2								
1		02.01.20	REVISED					
0		25.03.13	ORIGINAL			-	-	-

MATERIAL: ALUMINIUM 6061-T6 / 6082-T6	FINISH: BLACK ANODISED	PROJ.	TOL.GEN. ± IS: 2102 TOL.AXIS. ± (MED.)	PRJ. 109	
DRAWN: MALIKSAD	CHECKED	APPROVED	DIMNS: mm	SCALE: NTS	TITLE: HEAT SINK SK85/100SA
DATE 02.01.20	DATE	DATE	DRG. NUMBER: DPD 36 109 0 001	SIZE: A4	ISSUE: 1
KERALA STATE ELECTRONICS DEVELOPMENT CORPORATION LIMITED				NO.OF SHEETS: 1 / 1	

RESTRICTED

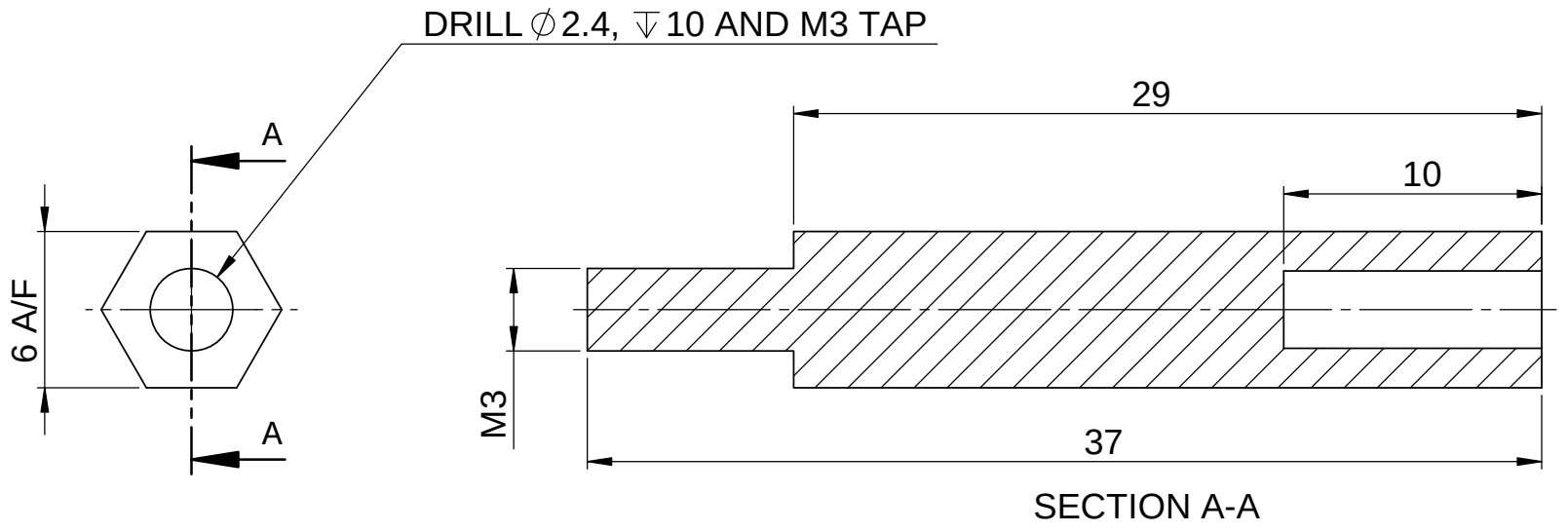

SECTION A-A

NOTE:

AVOID SHARP EDGES AND CORNERS

REV	CN.NO.	DATE	DESCRIPTION	CHECKED	APPROVED	NEXT ASSEMBLY	ITEM	QTY
4								
3								
2								
1								
0		29.07.17	ORIGINAL			DSA 36 109 0 011	10	04

MATERIAL: SS 316 HEXAGONAL ROD A/F 6mm	FINISH: --	PROJ.	TOL.GEN. ± IS: 2102 TOL.AXIS. ± (MED.)	PRJ. 109	
DRAWN: MALIKSAD	CHECKED	APPROVED	DIMNS: mm / SCALE: NTS	TITLE: HEX STUD	
DATE 29.07.17	DATE	DATE	DRG. NUMBER: DPD 36 109 0 068	SIZE: A4	ISSUE: 1
KERALA STATE ELECTRONICS DEVELOPMENT CORPORATION LIMITED				NO.OF SHEETS: 1 / 1	

RESTRICTED

RESTRICTED

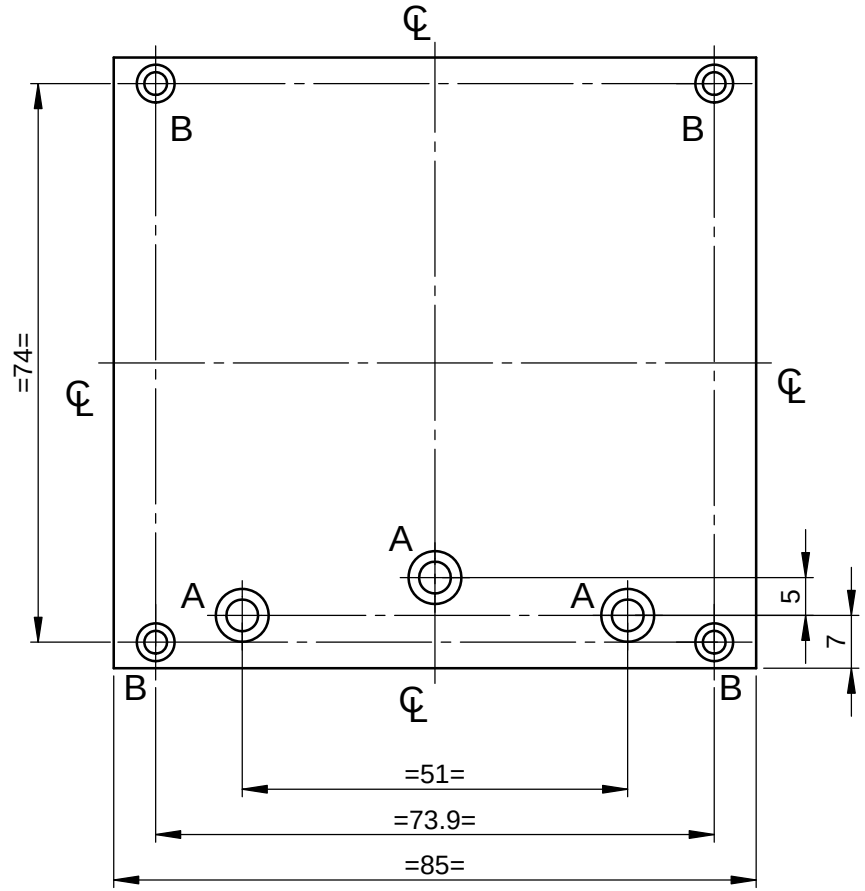

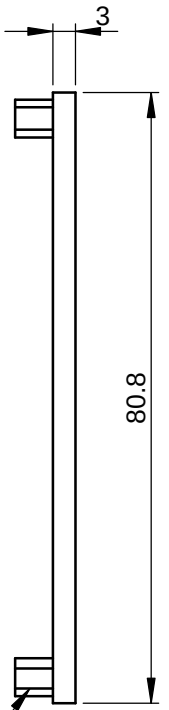

M3 RIVET NUT TO BE RIVETED ON
THE REAR SIDE OF HOLE'B'

NOTE:

1. AVOID SHARP EDGES AND CORNERS

SL NO	REF	DESCRIPTION	QTY
1	A	⌀4.2 ⌵ ⌀8.4	3
2	B	M3 RIVET NUT	4

REV	CN.NO.	DATE	DESCRIPTION	CHECKED	APPROVED	NEXT ASSEMBLY	ITEM	QTY
4								
3								
2								
1								
0		14.09.17	ORIGINAL			DSA 36 109 0 021	3	1

MATERIAL	FINISH	PROJ.	TOL.GEN. ± IS: 2102 TOL.AXIS. ± (MED.)	PRJ.
ALUMINIUM H32-5052	YELLOW CC COATING			109

DRAWN	CHECKED	APPROVED	DIMNS	SCALE	TITLE
MALIKSAD			mm	NTS	HMU FIXING PLATE
DATE 14.09.17	DATE	DATE	DRG. NUMBER		SIZE: A4 ISSUE: 1
KERALA STATE ELECTRONICS DEVELOPMENT CORPORATION LIMITED			DPD 36 109 0 048		NO.OF SHEETS: 1/1

RESTRICTED

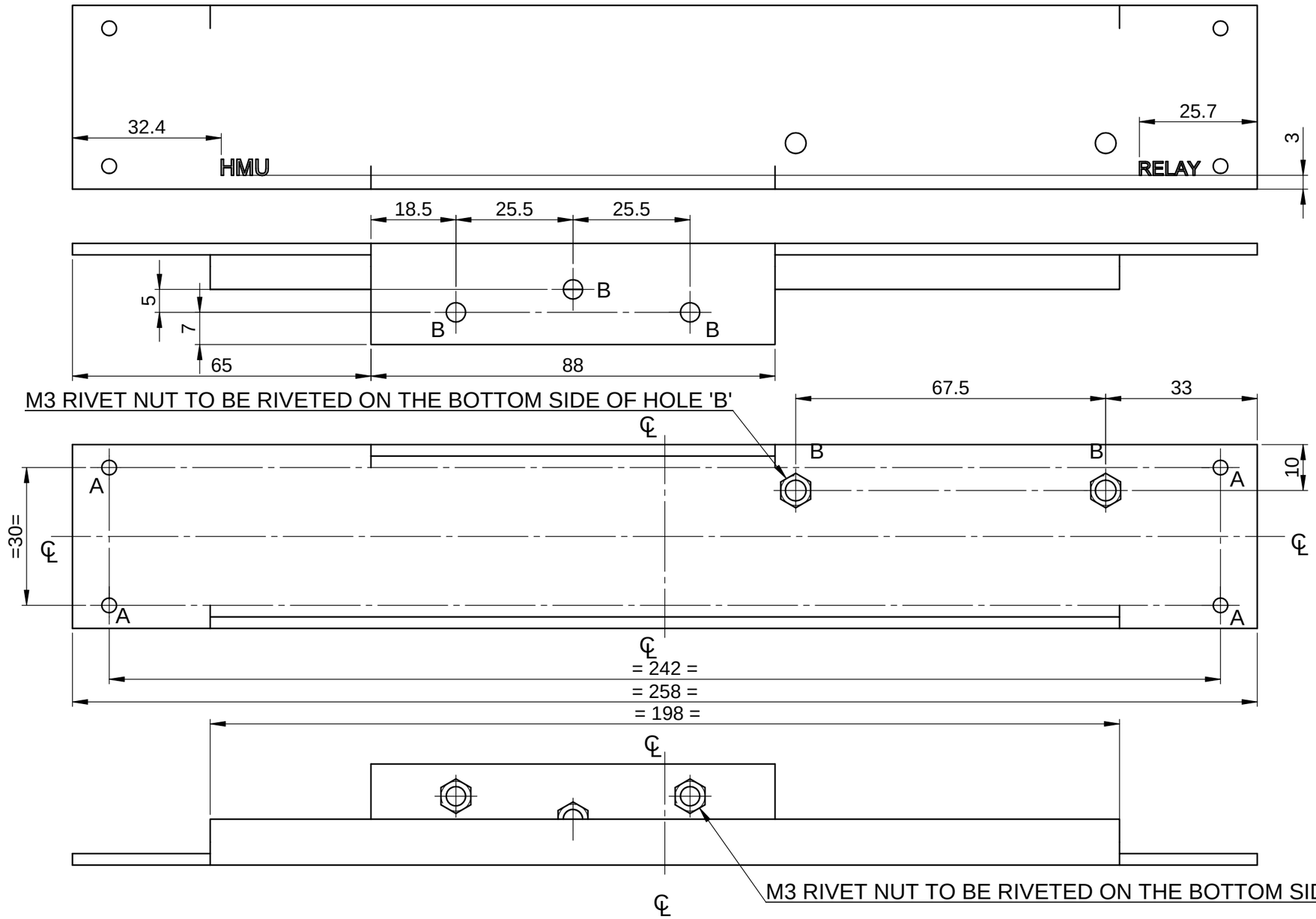

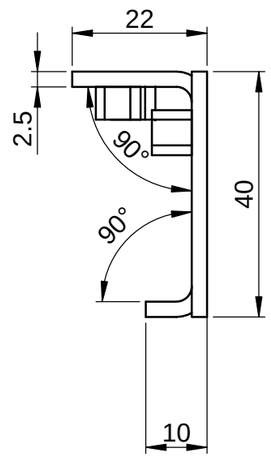

NOTE

1. AVOID SHARP CORNERS AND EDGES
2. 3x0.5⇩ TEXT TO BE ENGRAVED AND FILLED WITH BLACK PAINT

SL NO	REF	DESCRIPTION	QTY
1	A	∅4.2	4
2	B	M3 RIVET NUT	5

REV	CN.NO.	DATE	DESCRIPTION	CHECKED	APPROVED	NEXT ASSEMBLY	ITEM	QTY
4								
3								
2								
1								
0		19.08.17	ORIGINAL			DSA 36 109 0 021	5	1

MATERIAL	FINISH	PROJ.		PRJ.
ALUMINIUM H32-5052	YELLOW CC COATING		TOL.GEN. ± IS:2102 TOL.AXIS. ± (MED)	109

DRAWN	CHECKED	APPROVED	DIMNS	SCALE	TITLE
MALIKSAD			mm	NTS	HMU MOUNTING STRIP

DATE 19.08.17	DATE	DATE	DRG. NUMBER	SIZE	ISSUE
KERALA STATE ELECTRONICS DEVELOPMENT CORPORATION LIMITED			DPD 36 109 0 049	A3	1
				NO.OF SHEETS	1 / 1

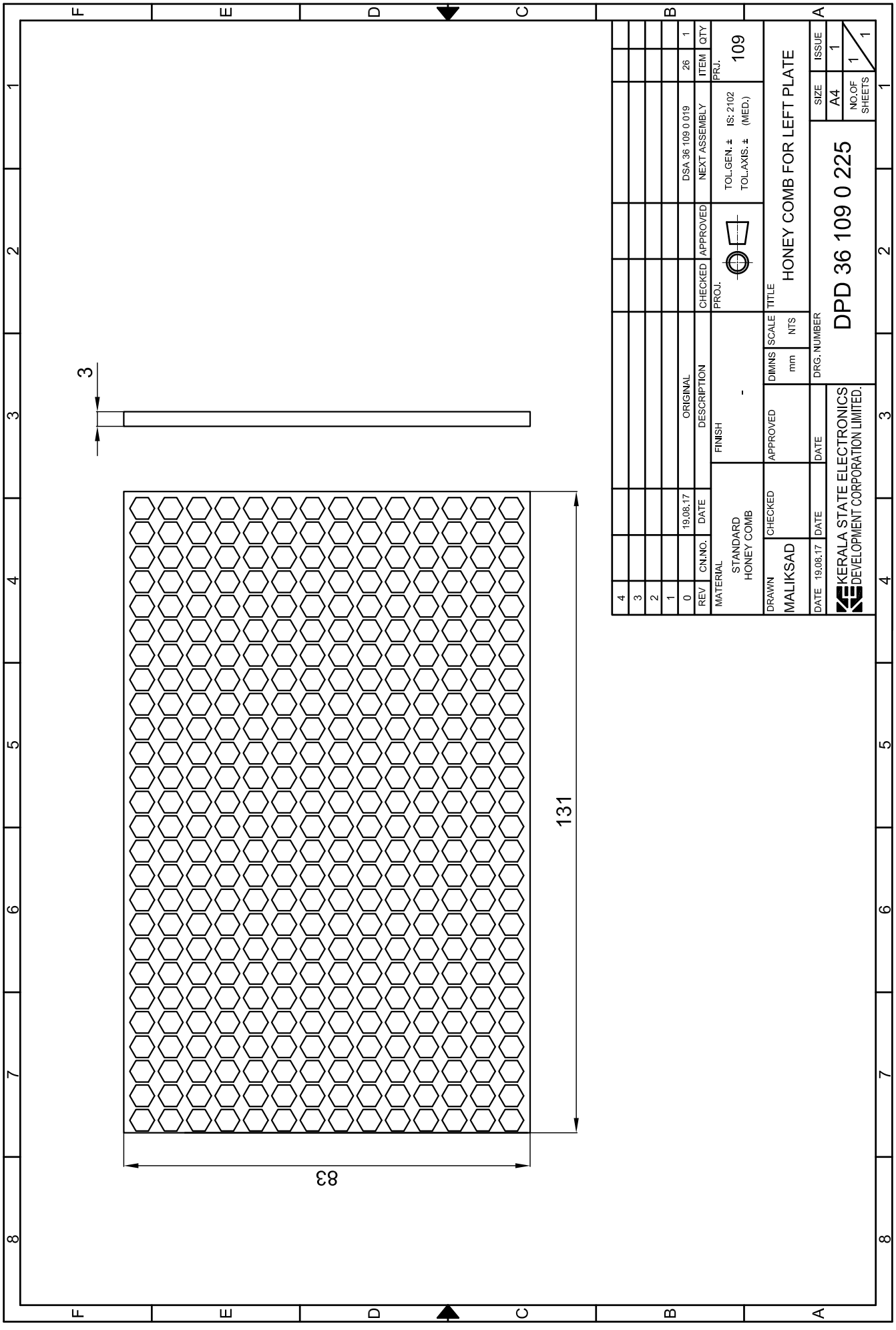
3
131
83
4
3
2
1
0
REV
CN.NO.
DATE
ORIGINAL
19.08.17
DESCRIPTION
CHECKED
APPROVED
DSA 36 109 0 019
26
NEXT ASSEMBLY
ITEM
1
QTY
PRJ.
109
TOL.GEN. ± IS: 2102
TOL.AXIS. ± (MED.)
PROJ.
MATERIAL
STANDARD
HONEY COMB
FINISH
-
DRAWN
MALIKSAD
DATE 19.08.17
CHECKED
DATE
APPROVED
DATE
DIMNS
mm
SCALE
NTS
TITLE
HONEY COMB FOR LEFT PLATE
DRG. NUMBER
DPD 36 109 0 225
KERALA STATE ELECTRONICS
DEVELOPMENT CORPORATION LIMITED.
SIZE
A4
ISSUE
1
NO.OF SHEETS
1
1

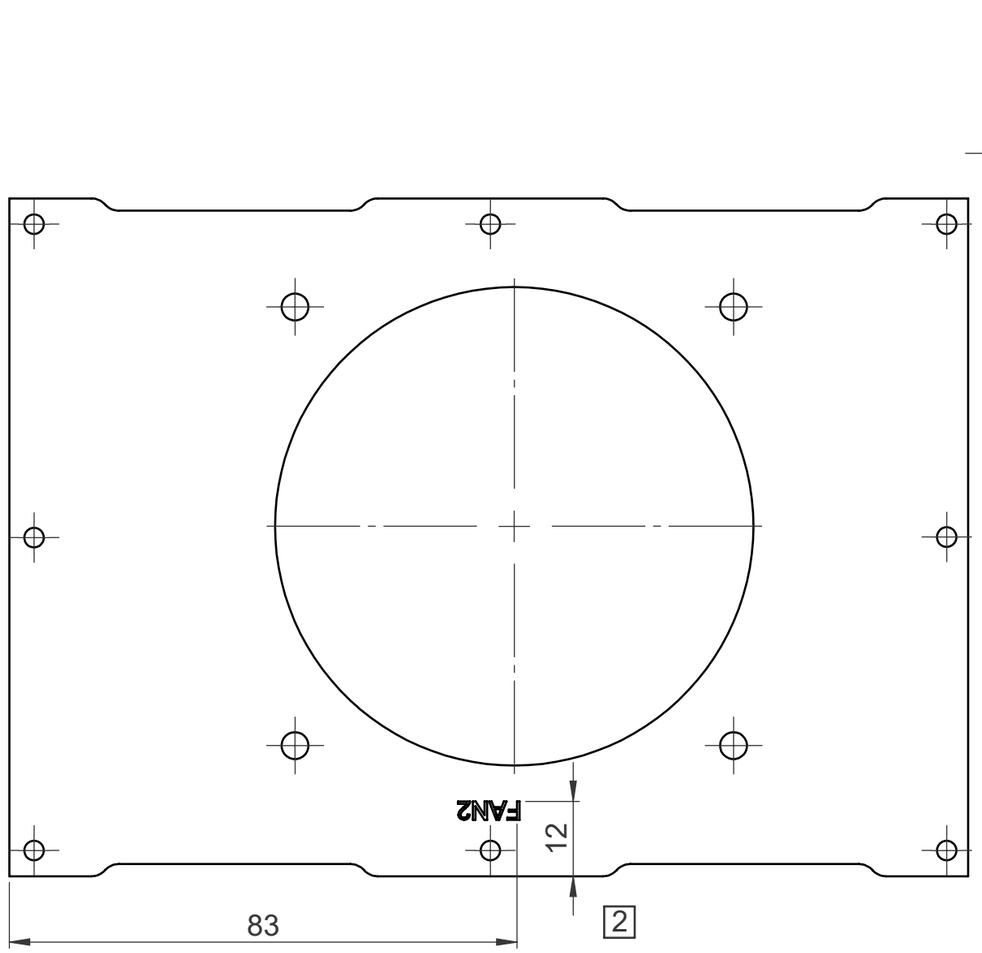

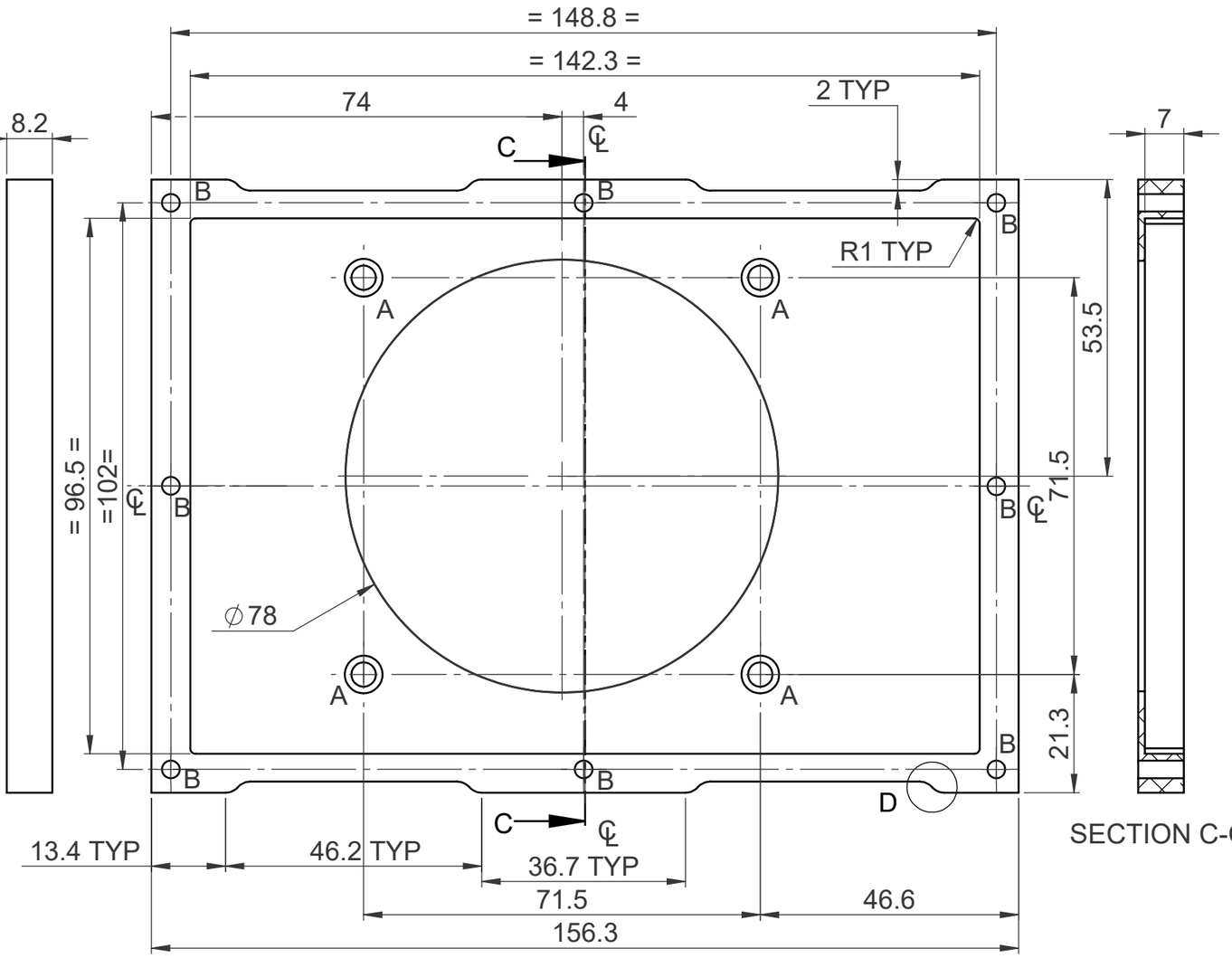

SECTION C-C

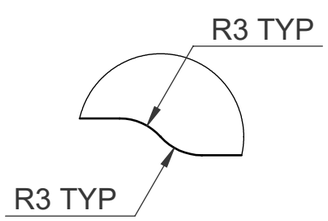

DETAIL D

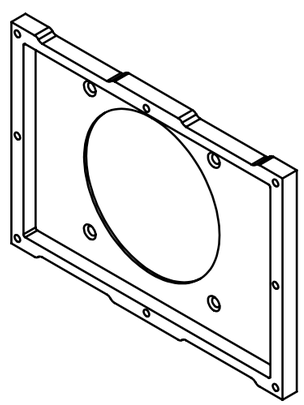

NOTE

1. AVOID SHARP CORNERS AND EDGES
2. 3x0.5⇩ TEXT TO BE ENGRAVED AND FILLED WITH BLACK PAINT

SL NO	REF	DESCRIPTION	QTY
1	A	∅3.2 ⌵ ∅6.8	4
2	B	∅3.2	8

REV	CN.NO.	DATE	DESCRIPTION	CHECKED	APPROVED	NEXT ASSEMBLY	ITEM	QTY
4								
3								
2	357	06.05.23	REVISED					
1		04.07.22	REVISED					
0		19.08.17	ORIGINAL			DSA 36 109 0 015	3	1

MATERIAL	FINISH	PROJ.		PRJ.
ALUMINIUM HE-30	YELLOW CC COATING		TOL.GEN. ± IS:2102 TOL.AXIS. ± (MED)	109

DRAWN	CHECKED	APPROVED	DIMNS	SCALE	TITLE
MALIKSAD			mm	NTS	1 HONEY COMB HOLDER FOR RIGHT PLATE
DATE 19.08.17	DATE	DATE			

KERALA STATE ELECTRONICS DEVELOPMENT CORPORATION LIMITED

DRG. NUMBER: DPD 36 109 0 056

SIZE	ISSUE
A3	1
NO.OF SHEETS	1 / 1

RESTRICTED

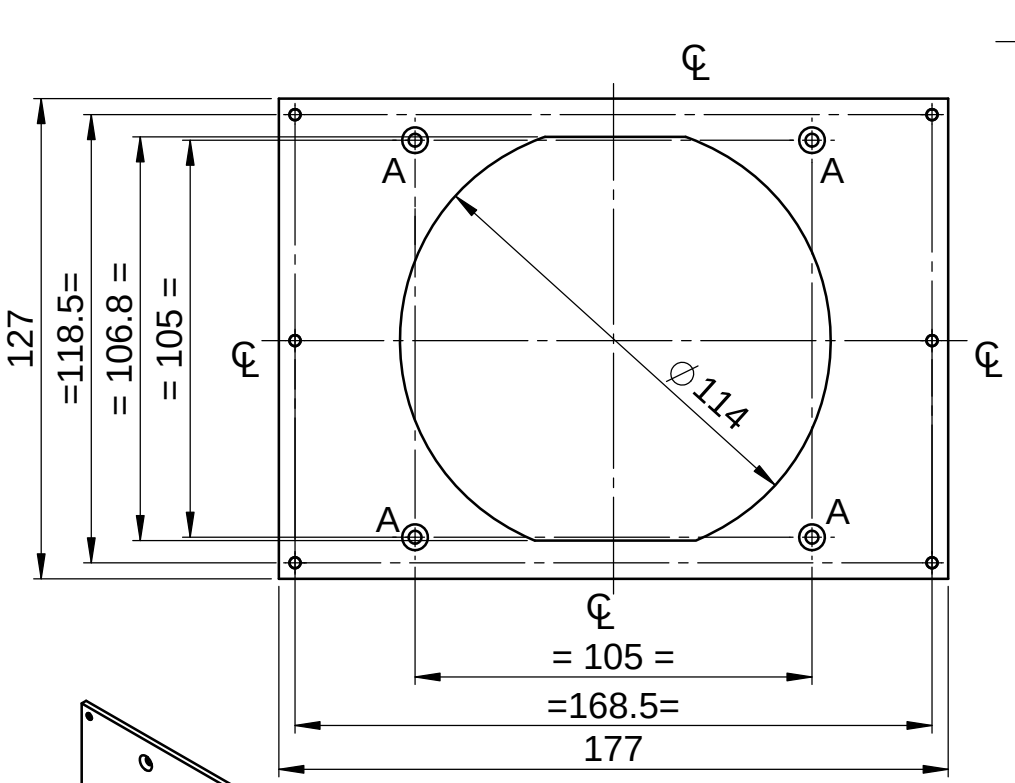

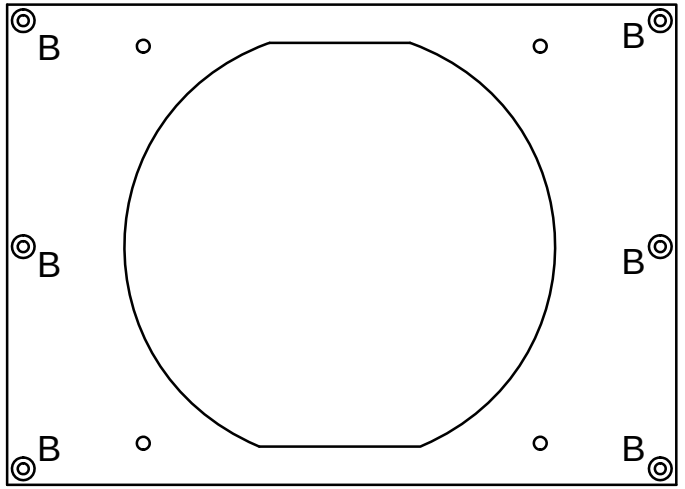

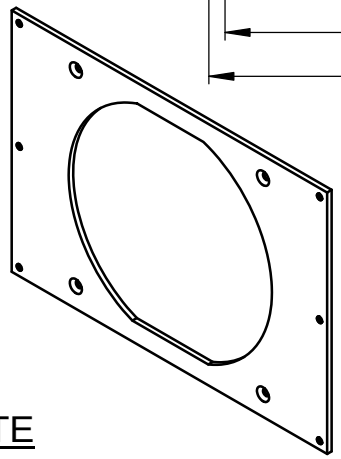

SL NO	REF	DESCRIPTION	QTY
1	A	∅3.2 ⌵ ∅6.8	4
2	B	∅2.9 ⌵ ∅6.2	6

REV	CN.NO.	DATE	DESCRIPTION	CHECKED	APPROVED	NEXT ASSEMBLY	ITEM	QTY
4								
3								
2								
1								
0		17.09.17	ORIGINAL			DSA 36 109 0 018	4	1

MATERIAL	FINISH	PROJ.	TOL.GEN. ± / TOL.AXIS. ±	PRJ.
ALUMINIUM HE-30	YELLOW CC COATING		IS: 2102 (MED.)	109

DRAWN	CHECKED	APPROVED	DIMNS	SCALE	TITLE
MALIKSAD			mm	NTS	HONEY COMB HOLDER
DATE 17.09.17	DATE	DATE	DRG. NUMBER		SIZE A4 / ISSUE 1
KERALA STATE ELECTRONICS DEVELOPMENT CORPORATION LIMITED			DPD 36 109 0 082		NO.OF SHEETS 1 / 1

NOTE

1. AVOID SHARP CORNERS AND EDGES
2. BURRS MUST BE REMOVED

RESTRICTED

RESTRICTED

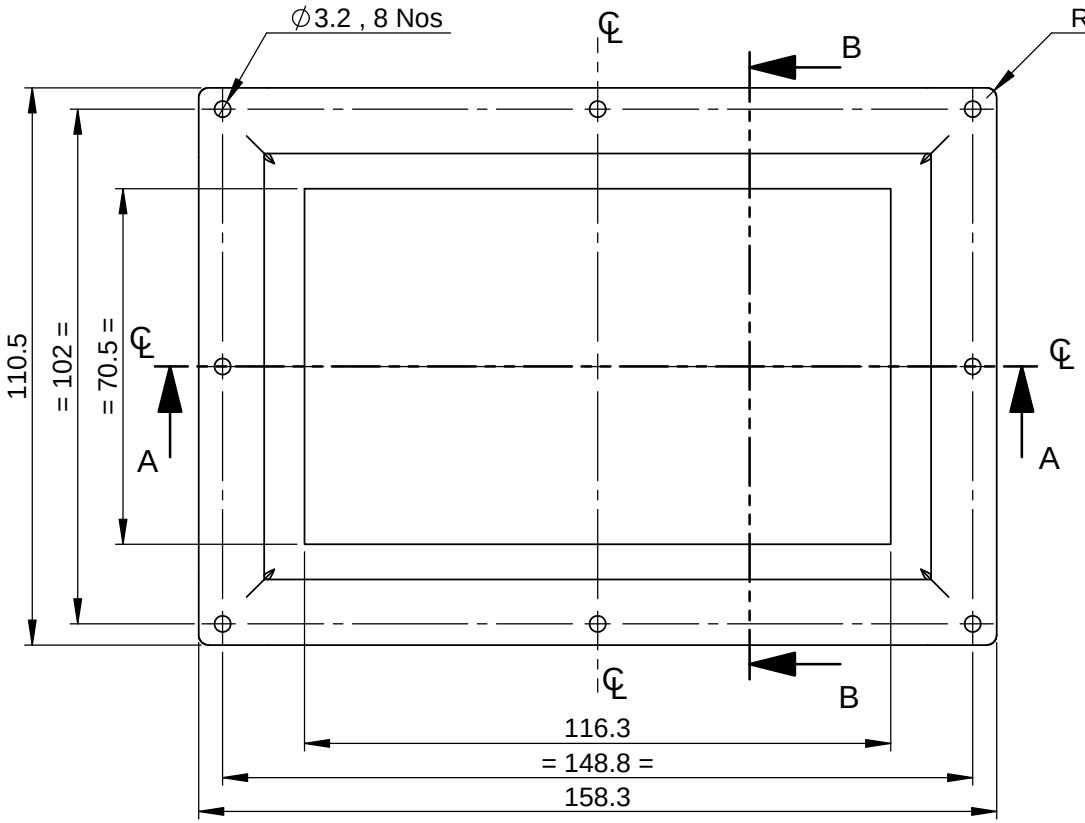

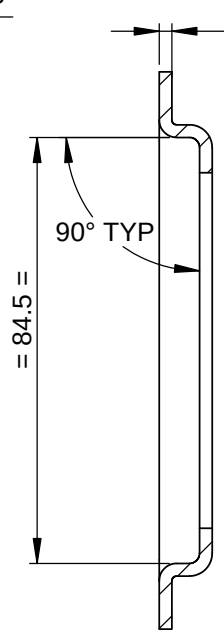

SECTION B-B

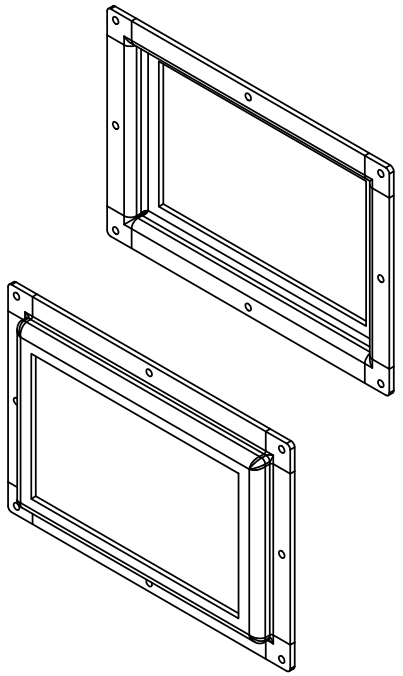

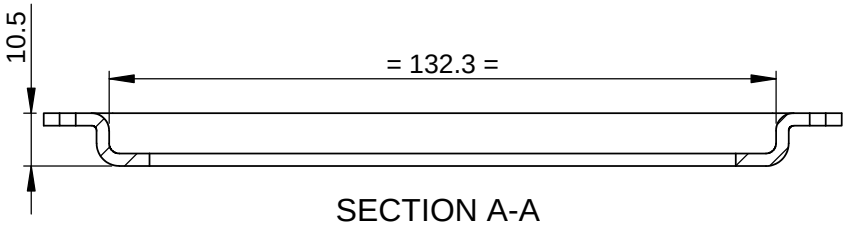

SECTION A-A

NOTE:

AVOID SHARP EDGES AND CORNERS
AFTER BENDING, CORNERS TO BE FILLED WITH WELDING

REV	CN.NO.	DATE	DESCRIPTION	CHECKED	APPROVED	NEXT ASSEMBLY	ITEM	QTY
4								
3								
2								
1								
0		19.08.17	ORIGINAL			DSA 36 109 0 019	27	1

MATERIAL: ALUMINIUM H32-5052	FINISH: YELLOW CC COATING	PROJ.	TOL.GEN. ± IS: 2102 TOL.AXIS. ± (MED.)	PRJ. 109	
DRAWN: MALIKSAD	CHECKED	APPROVED	DIMNS: mm / SCALE: NTS	TITLE: HONEY COMB HOLDER FOR LEFT PLATE	
DATE 19.08.17	DATE	DATE	DRG. NUMBER: DPD 36 109 0 226	SIZE: A4	ISSUE: 1
KERALA STATE ELECTRONICS DEVELOPMENT CORPORATION LIMITED				NO.OF SHEETS: 1 / 1	

RESTRICTED

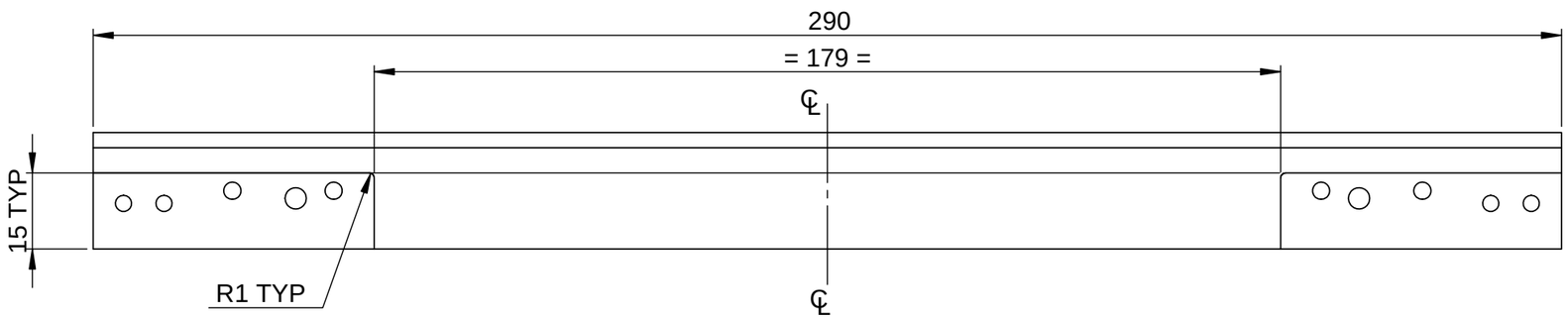

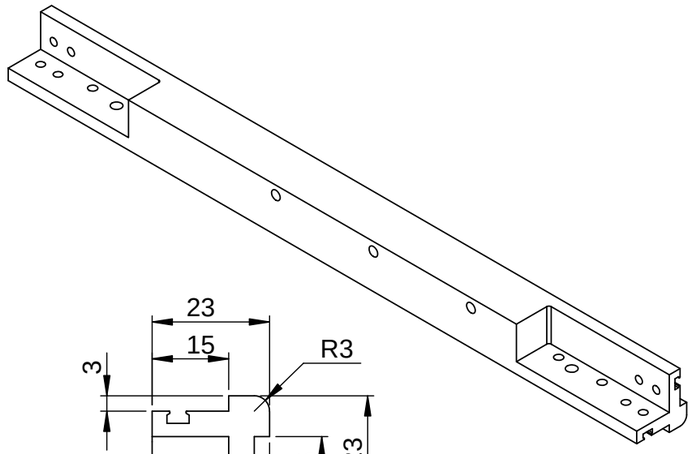

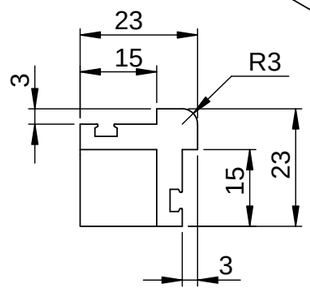

NOTE:

1. AVOID SHARP EDGES AND CORNERS
2. ALL BURRS MUST BE REMOVED

SL NO	REF	DESCRIPTION	QTY
1	A	DRILL ∅4.1, ↧10 AND M4 HELICOIL TAP	3
2	B	DRILL ∅3.2 ⌴ ∅6.2, ↧ 2.4	8
3	C	DRILL ∅3.2 ⌵ ∅ 6.3	4
4	D	DRILL ∅4.1 AND M4 HELICOIL TAP	2
5	E	DRILL ∅4.1, ↧15 AND M4 HELICOIL TAP	2

REV	CN.NO.	DATE	DESCRIPTION	CHECKED	APPROVED	NEXT ASSEMBLY	ITEM	QTY
4								
3								
2								
1								
0		19.08.17	ORIGINAL			DSA 36 109 0 020	12	1

MATERIAL: ALUMINIUM HE-30	FINISH: YELLOW CC COATING	PROJ.	TOL.GEN. ± IS:2102 TOL.AXIS. ± (MED)	PRJ. 109	
DRAWN: MALIKSAD	CHECKED	APPROVED	DIMNS: mm	SCALE: NTS	TITLE: HT FRONT BOTTOM FRAME
DATE 19.08.17	DATE	DATE	DRG. NUMBER: DPD 36 109 0 098	SIZE: A3	ISSUE: 1
KERALA STATE ELECTRONICS DEVELOPMENT CORPORATION LIMITED.				NO.OF SHEETS: 1/2	

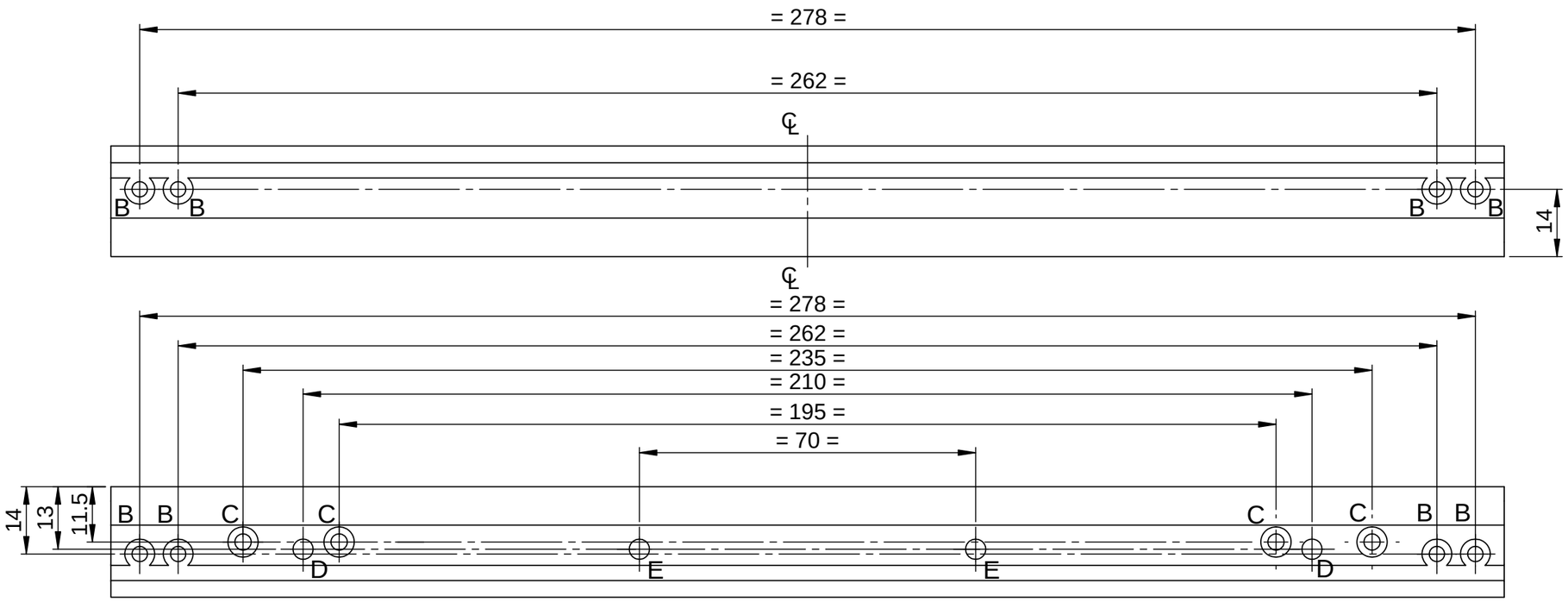

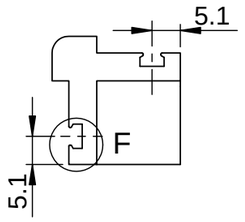

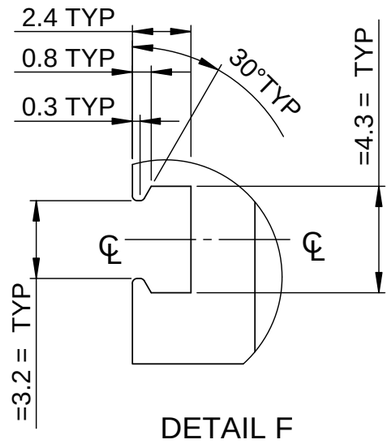

DETAIL F

REV	CN.NO.	DATE	DESCRIPTION	CHECKED	APPROVED	NEXT ASSEMBLY	ITEM	QTY
4								
3								
2								
1								
0		19.08.17	ORIGINAL			DSA 36 109 0 020	12	1

MATERIAL: ALUMINIUM HE-30	FINISH: YELLOW CC COATING	PROJ.	TOL.GEN. ± IS:2102 TOL.AXIS. ± (MED)	PRJ. 109	
DRAWN: MALIKSAD	CHECKED	APPROVED	DIMNS: mm / SCALE: NTS	TITLE: HT FRONT BOTTOM FRAME	
DATE 19.08.17	DATE	DATE	DRG. NUMBER: DPD 36 109 0 098	SIZE: A3	ISSUE: 1
KERALA STATE ELECTRONICS DEVELOPMENT CORPORATION LIMITED.				NO.OF SHEETS: 2 / 2	

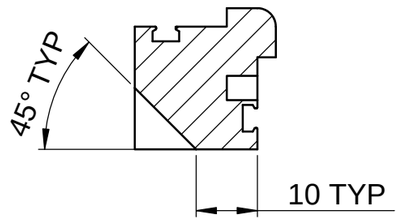

SECTION D-D

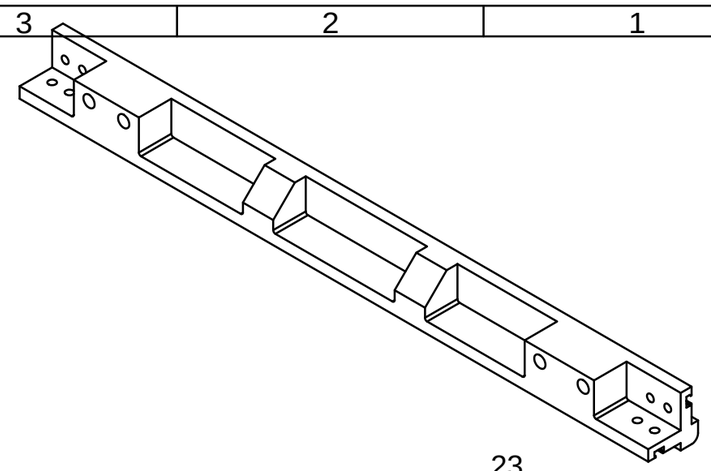

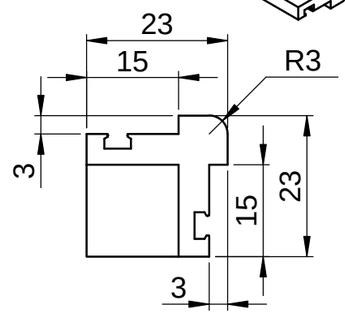

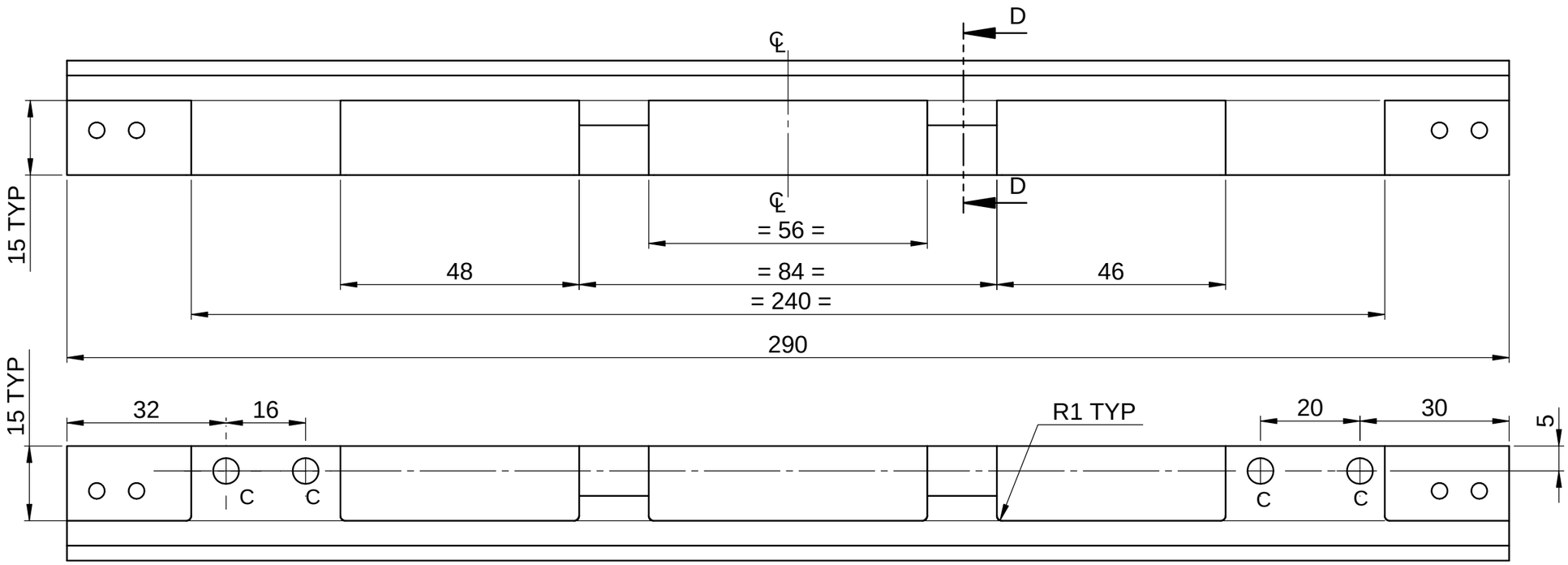

NOTE

1. AVOID SHARP CORNERS AND EDGES
2. ALL BURRS MUST BE REMOVED

SL NO	REF	DESCRIPTION	QTY
1	A	DRILL ⌀3.2, ⌴ ⌀6.2, ↧2.4	8
2	B	DRILL ⌀4.1, ↧5 AND M4 HELICOIL TAP	4
3	C	DRILL ⌀5.2, ↧15 AND M5 HELICOIL TAP	4

REV	CN.NO.	DATE	DESCRIPTION	CHECKED	APPROVED	NEXT ASSEMBLY	ITEM	QTY
4								
3								
2								
1								
0		19.08.17	ORIGINAL			DSA 36 109 0 020	16	1

MATERIAL: ALUMINIUM HE-30	FINISH: YELLOW CC COATING	PROJ.	TOL.GEN. ± IS:2102 TOL.AXIS. ± (MED)	PRJ. 109	
DRAWN: MALIKSAD	CHECKED	APPROVED	DIMNS: mm / SCALE: NTS	TITLE: HT TOP FRONT FRAME	
DATE 19.08.17	DATE	DATE			

KERALA STATE ELECTRONICS DEVELOPMENT CORPORATION LIMITED

DRG. NUMBER: DPD 36 109 0 102

SIZE	ISSUE
A3	1
NO.OF SHEETS	1 / 2

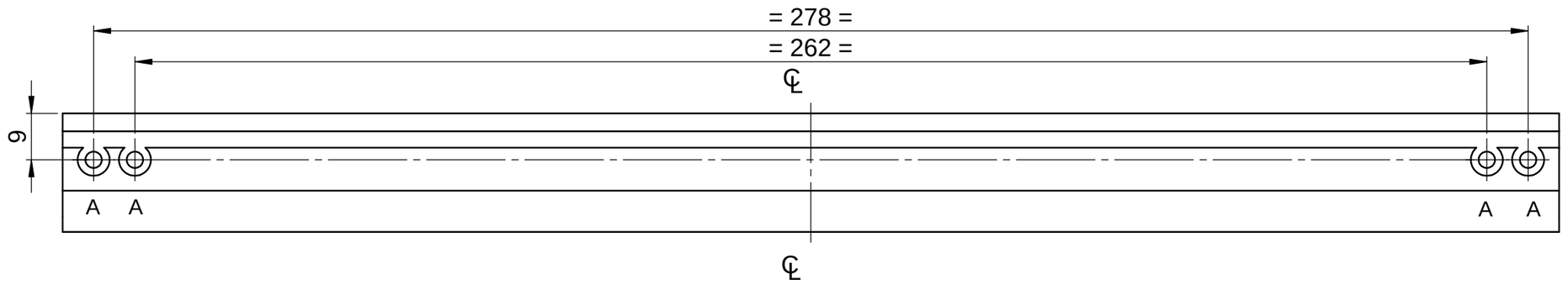

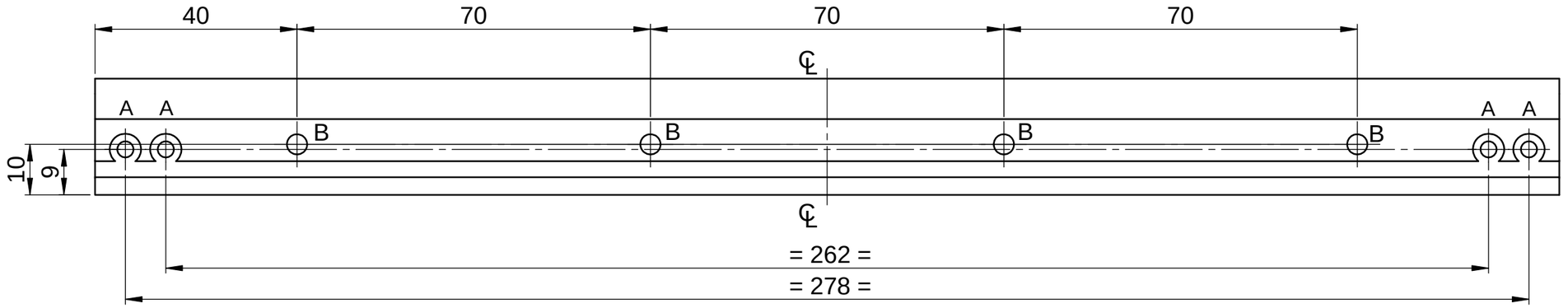

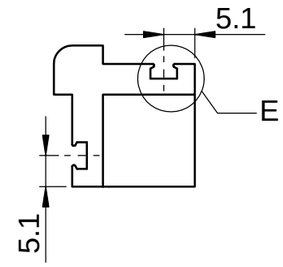

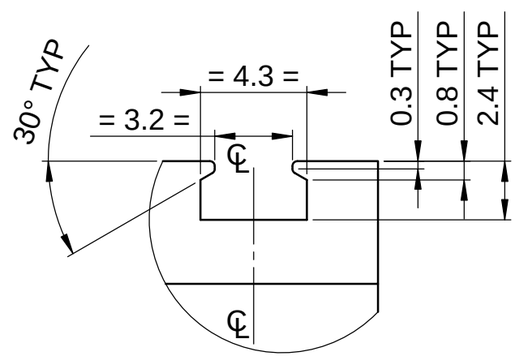

DETAIL E

4								
3								
2								
1								
0		19.08.17	ORIGINAL			DSA 36 109 0 020	16	1
REV	CN.NO.	DATE	DESCRIPTION	CHECKED	APPROVED	NEXT ASSEMBLY	ITEM	QTY

MATERIAL: ALUMINIUM HE-30	FINISH: YELLOW CC COATING	PROJ.	TOL.GEN. ± IS:2102 TOL.AXIS. ± (MED)	PRJ. 109	
DRAWN: MALIKSAD	CHECKED	APPROVED	DIMNS: mm / SCALE: NTS	TITLE: HT TOP FRONT FRAME	
DATE 19.08.17	DATE	DATE	KERALA STATE ELECTRONICS DEVELOPMENT CORPORATION LIMITED	DRG. NUMBER: DPD 36 109 0 102	SIZE: A3 / ISSUE: 1 / NO.OF SHEETS: 2/2

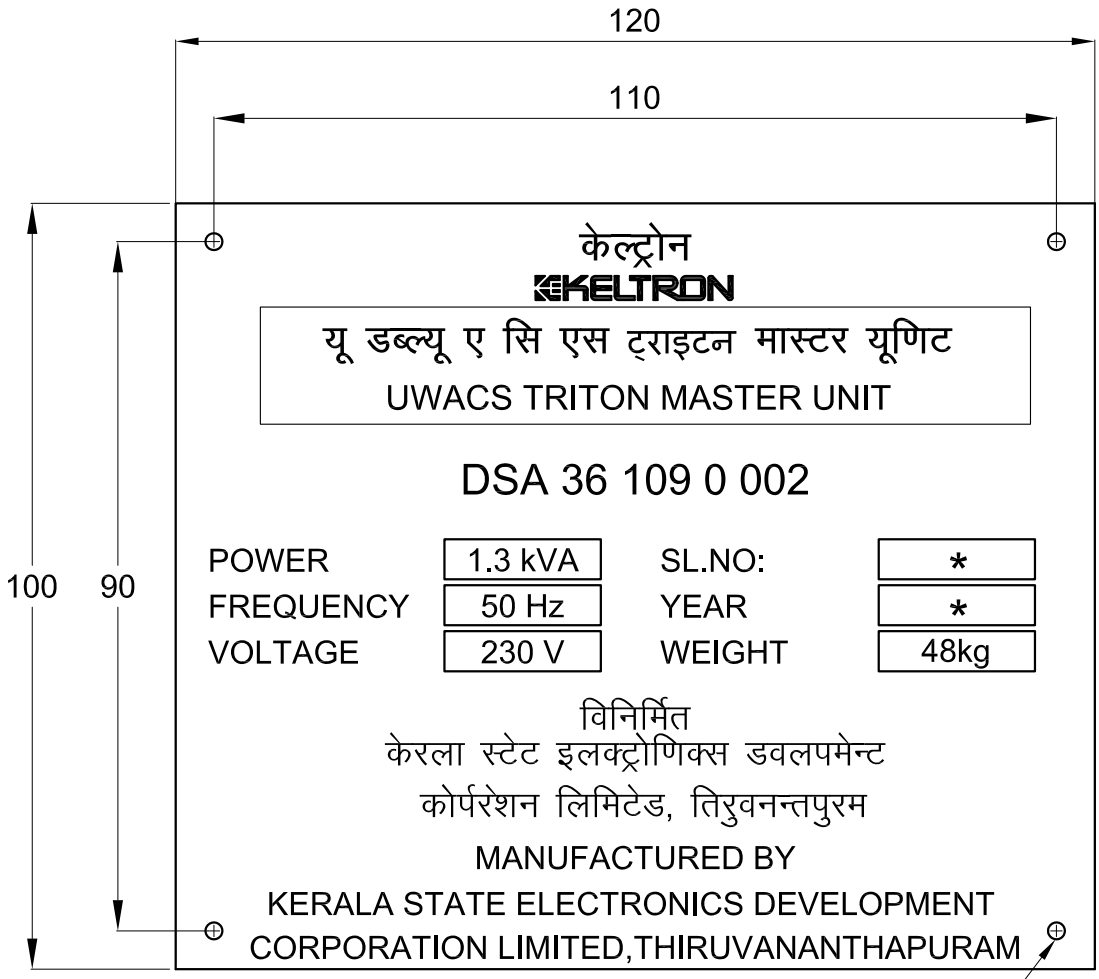

△2 Ø2.2 X 4 HOLES (TYP)

NOTE :

AVOID SHARP CORNERS AND EDGES

* 3mm TEXT TO BE ENGRAVED

ISSUE	CN.NO.	DATE	DESCRIPTION	APPROVED	NUMBER	ITEM	QTY
5							
4							
3							
△2		20/06/15	REVISED		DSA 36 109 0 002	44	1
1		21/05/15	ORGINAL		DSA 36 109 0 002	44	1

MATERIAL: 1 mm THK. AL. SHEET	FINISH: GOLDEN TEXT ON BLACK ANODISED BACKGROUND	PROJ.	NEXT ASSEMBLY TOL.GEN. ± IS : 2102 TOL.AXIS. ± (MED.) PRJ. 109

DRAWN	CHECKED		DIMNS	SCALE	TITLE
MALIKSAD			mm	1 : 1	IDENTIFICATION PLATE (UWACS TRITON MASTER UNIT)

DATE 21/05/15	ELECTRICAL	MECHANICAL	DOC CODE	DRG. NUMBER	SIZE	ISSUE
KERALA STATE ELECTRONICS DEVELOPMENT CORPORATION LIMITED.				DPD 36 109 0 213	A4	1
					NO.OF SHEETS	1/1

RESTRICTED

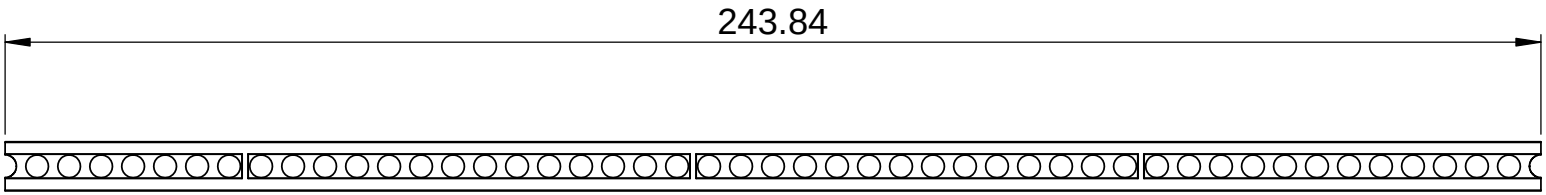

NOTE:

AVOID SHARP EDGES AND CORNERS

4								
3								
2								
1								
0		24.08.19	ORIGINAL			DSA 36 109 0 012	37	2
REV	CN.NO.	DATE	DESCRIPTION	CHECKED	APPROVED	NEXT ASSEMBLY	ITEM	QTY

MATERIAL STANDARD ITEM SCHROFF PART NO:24560-863	FINISH -	PROJ.	TOL.GEN. ± TOL.AXIS. ±	IS: 2102 (MED.)	PRJ. 109

DRAWN MALIKSAD	CHECKED	APPROVED	DIMNS mm	SCALE NTS	TITLE INSULATION STRIP-BOTTOM CARD CAGE
DATE 24.08.19	DATE	DATE	DRG. NUMBER DPD 36 109 0 232		SIZE A4 / ISSUE 1
KERALA STATE ELECTRONICS DEVELOPMENT CORPORATION LIMITED					NO.OF SHEETS 1 / 1

RESTRICTED

RESTRICTED

RESTRICTED

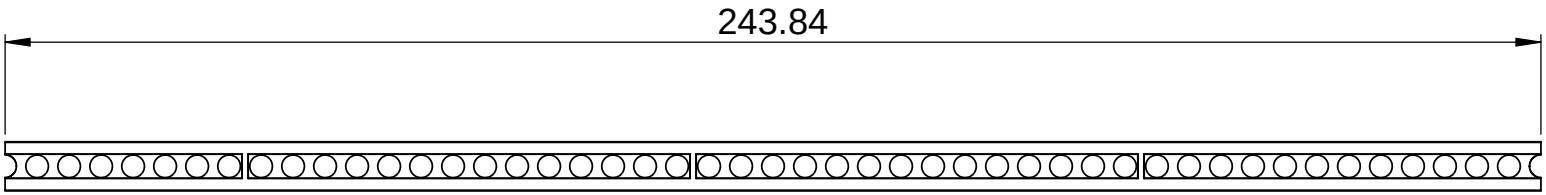

NOTE:

AVOID SHARP EDGES AND CORNERS

REV	CN.NO.	DATE	DESCRIPTION	CHECKED	APPROVED	NEXT ASSEMBLY	ITEM	QTY
4								
3								
2								
1								
0		19.08.17	ORIGINAL			DSA 36 109 0 013	32	2

MATERIAL STANDARD ITEM SCHROFF PART NO:24560-863	FINISH -	PROJ.	TOL.GEN. ± TOL.AXIS. ±	IS: 2102 (MED.)	PRJ. 109

DRAWN	CHECKED	APPROVED	DIMNS	SCALE	TITLE
MALIKSAD			mm	NTS	INSULATION STRIP-TOP CARD CAGE
DATE 19.08.17	DATE	DATE	DRG. NUMBER		SIZE: A4 / ISSUE: 1

KERALA STATE ELECTRONICS DEVELOPMENT CORPORATION LIMITED

DPD 36 109 0 234

NO.OF SHEETS: 1 / 1

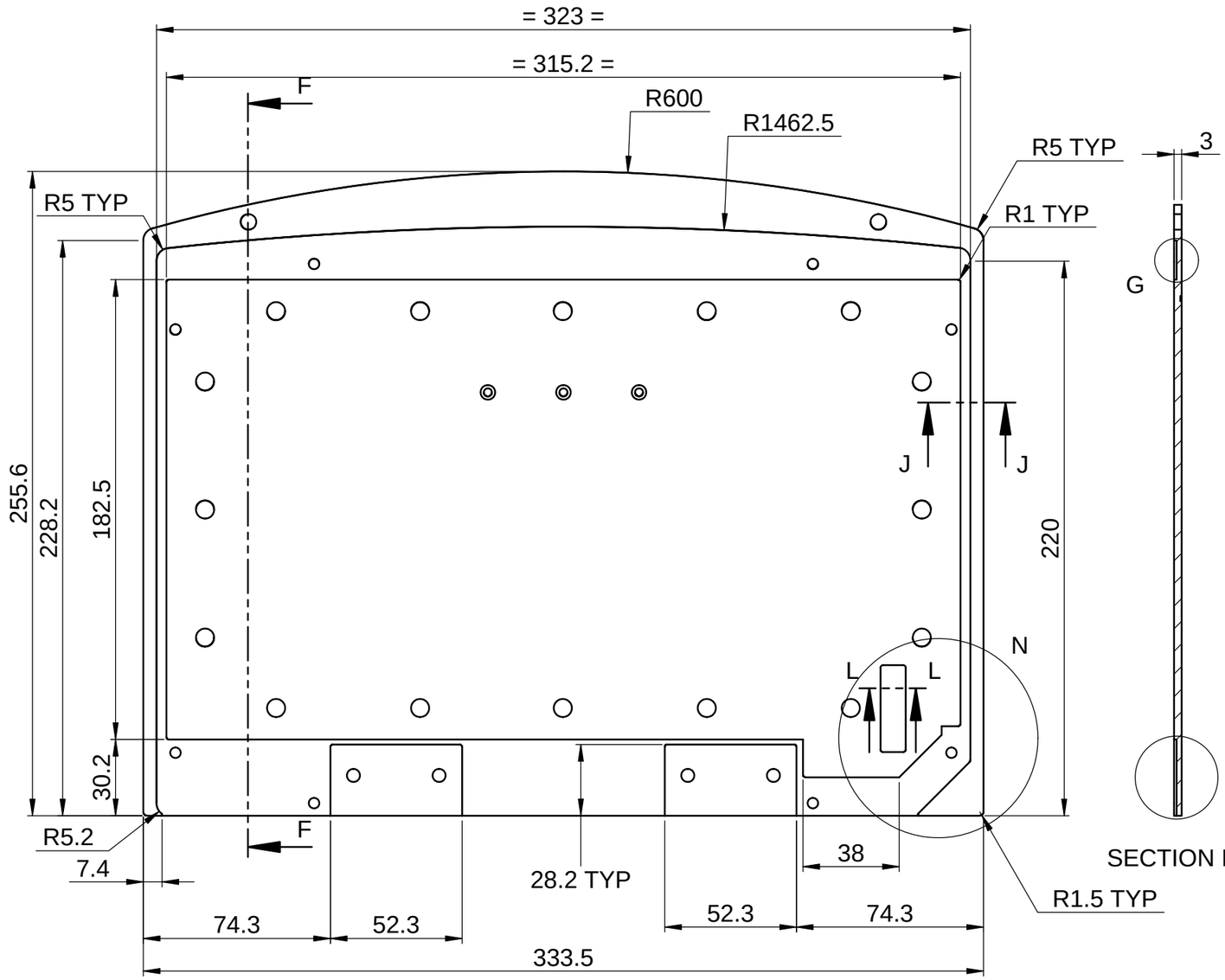

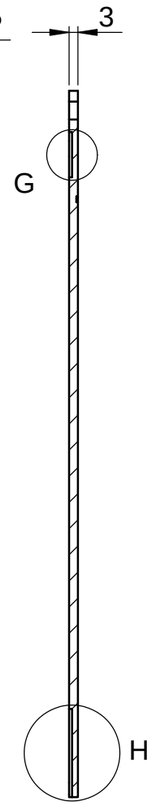

SECTION F-F

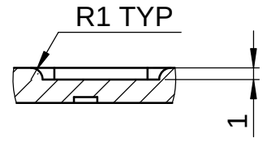

DETAIL M

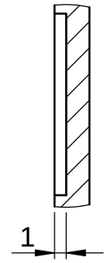

DETAIL G

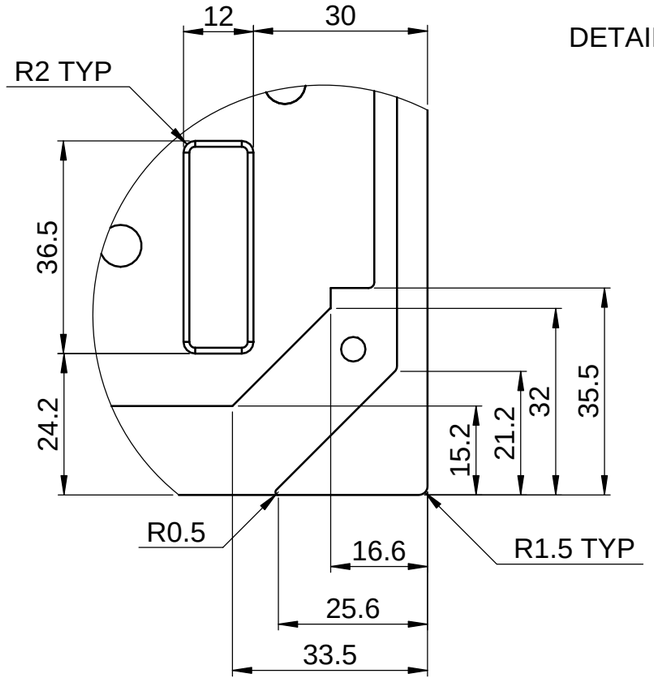

DETAIL N

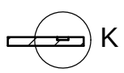

SECTION J-J

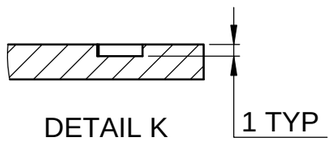

DETAIL K

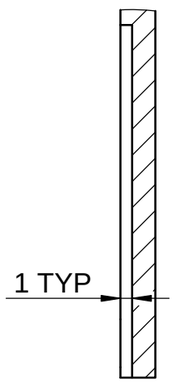

DETAIL H

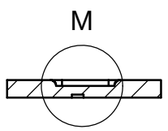

SECTION L-L

REV	CN.NO.	DATE	DESCRIPTION	CHECKED	APPROVED	NEXT ASSEMBLY	ITEM	QTY
4								
3								
2								
1								
0		19.08.16	ORIGINAL			DSA 36 109 0 022	4	1

MATERIAL: ALUMINIUM HE-30	FINISH: YELLOW CC COATING	PROJ.	TOL.GEN. ± IS:2102 TOL.AXIS. ± (MED)	PRJ. 109	
DRAWN: THUSHANTH	CHECKED	APPROVED	DIMNS: mm	SCALE: NTS	TITLE: KEY BOARD BACK PLATE
DATE 19.08.16	DATE	DATE	DRG. NUMBER: DPD 36 109 0 108	SIZE: A3	ISSUE: 1
KERALA STATE ELECTRONICS DEVELOPMENT CORPORATION LIMITED.				NO.OF SHEETS: 1 / 4	

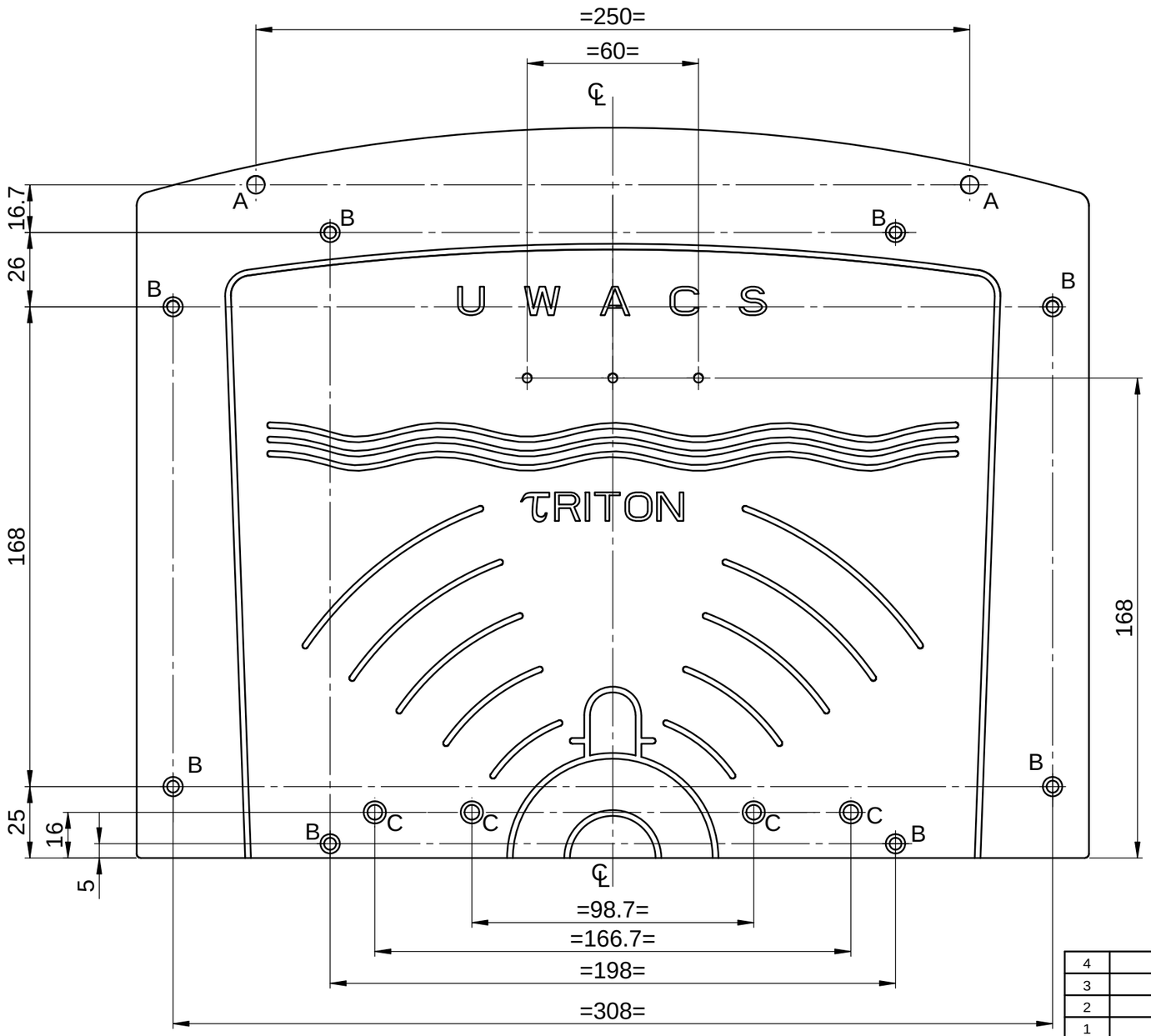

REV	CN.NO.	DATE	DESCRIPTION	CHECKED	APPROVED	NEXT ASSEMBLY	ITEM	QTY
4								
3								
2								
1								
0		19.08.16	ORIGINAL			DSA 36 109 0 022	4	1

MATERIAL: ALUMINIUM HE-30	FINISH: YELLOW CC COATING	PROJ.	TOL.GEN. ± IS:2102 TOL.AXIS. ± (MED)	PRJ.: 109	
DRAWN: THUSHANTH	CHECKED	APPROVED	DIMNS: mm	SCALE: NTS	TITLE: KEY BOARD BACK PLATE
DATE 19.08.16	DATE	DATE			

KERALA STATE ELECTRONICS DEVELOPMENT CORPORATION LIMITED.

DRG. NUMBER: DPD 36 109 0 108

SIZE	ISSUE
A3	1
NO.OF SHEETS	2 / 4

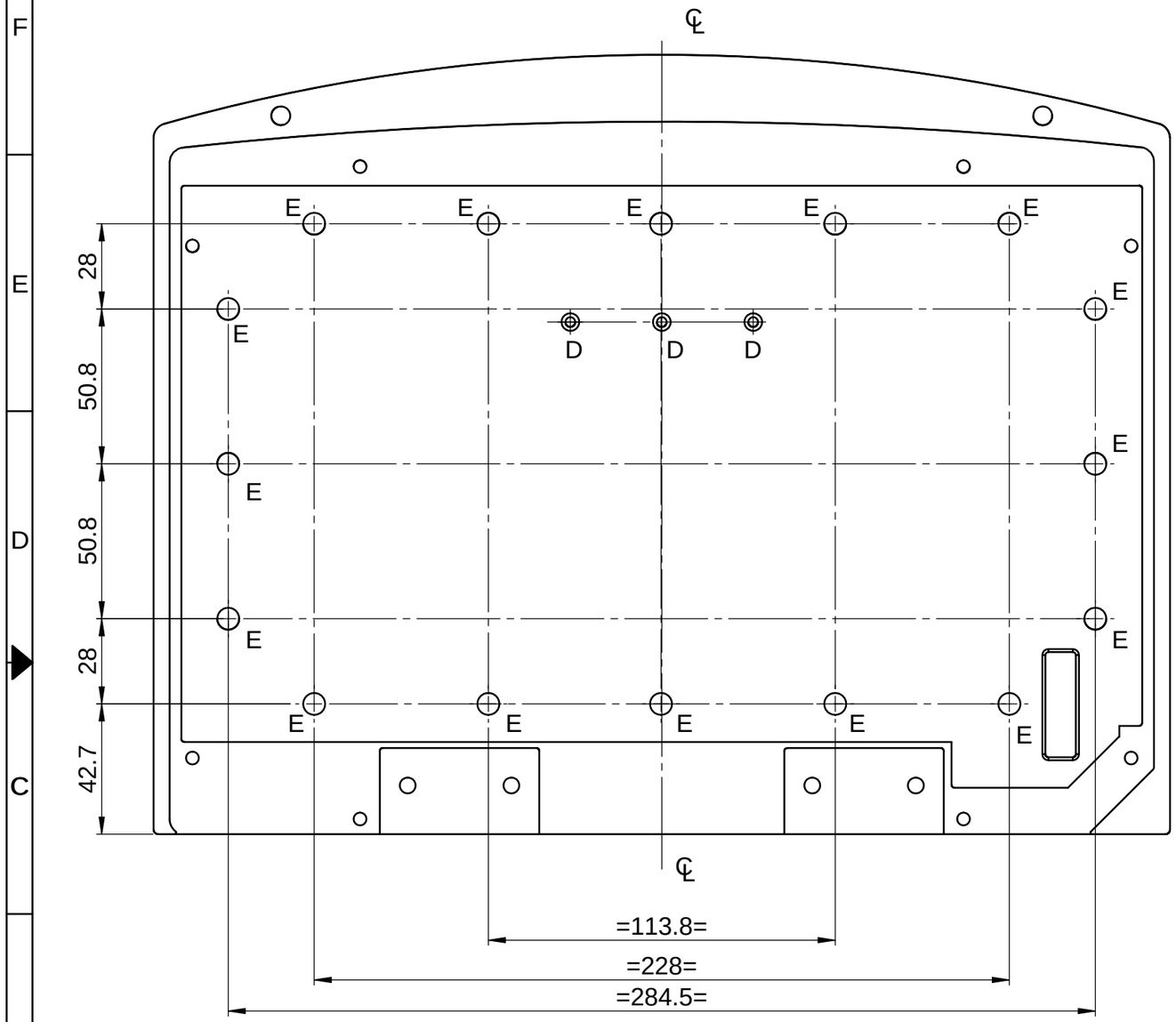

SL NO	REF	DESCRIPTION	QTY
1	A	∅6.2	2
2	B	∅4.2 ⌵ ∅6.8	8
3	C	∅5.2 ⌵ ∅7.8	4
4	D	∅3.2 ⌵ ∅5.8	3
5	E	∅7.2↧2.3	16

REV	CN.NO.	DATE	DESCRIPTION	CHECKED	APPROVED	NEXT ASSEMBLY	ITEM	QTY
4								
3								
2								
1								
0		19.08.16	ORIGINAL			DSA 36 109 0 022	4	1

MATERIAL: ALUMINIUM HE-30	FINISH: YELLOW CC COATING	PROJ.	TOL.GEN. ± IS:2102 TOL.AXIS. ± (MED)	PRJ. 109	
DRAWN: THUSHANTH	CHECKED	APPROVED	DIMNS: mm / SCALE: NTS	TITLE: KEY BOARD BACK PLATE	
DATE 19.08.16	DATE	DATE	DRG. NUMBER: DPD 36 109 0 108	SIZE: A3	ISSUE: 1
KERALA STATE ELECTRONICS DEVELOPMENT CORPORATION LIMITED.				NO.OF SHEETS: 3/4	

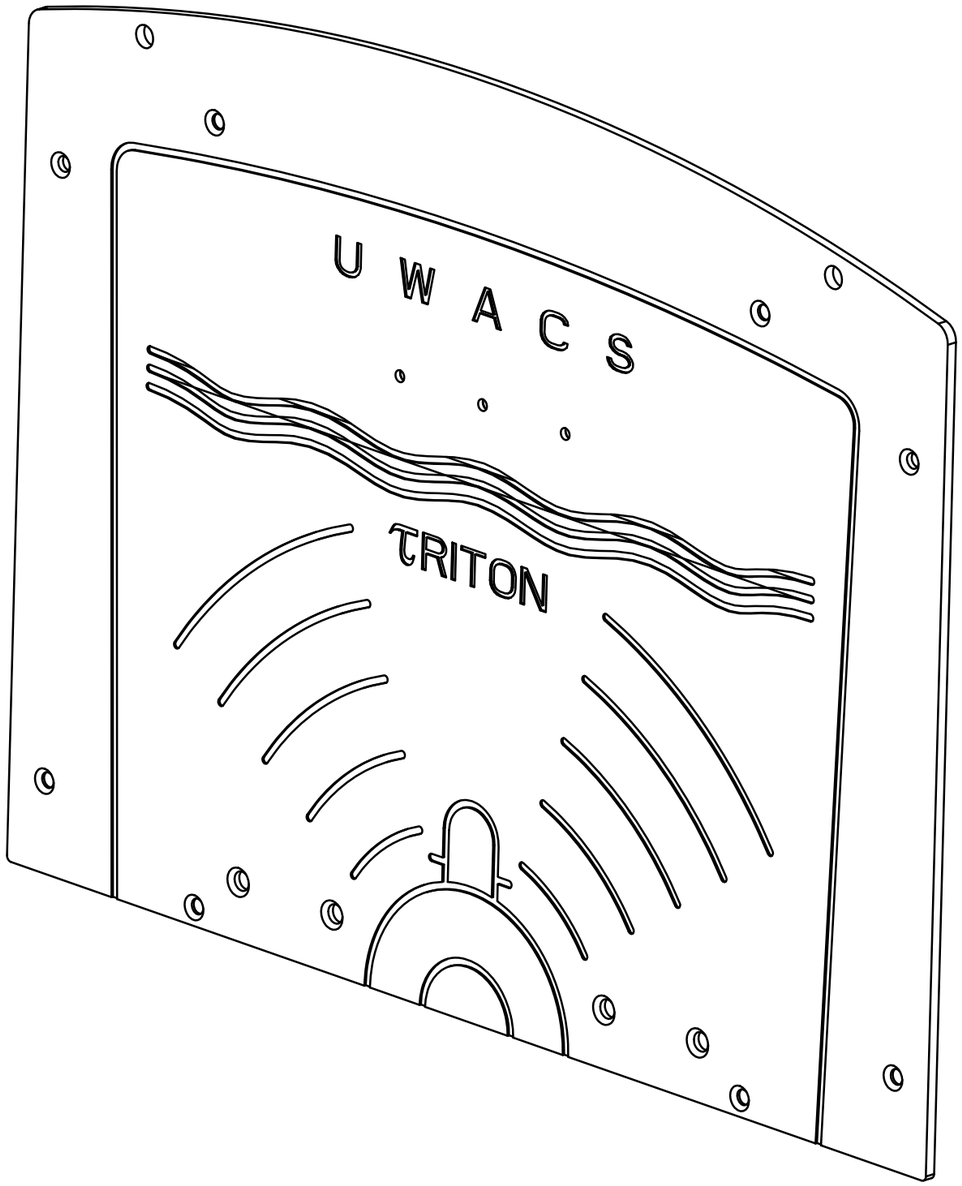

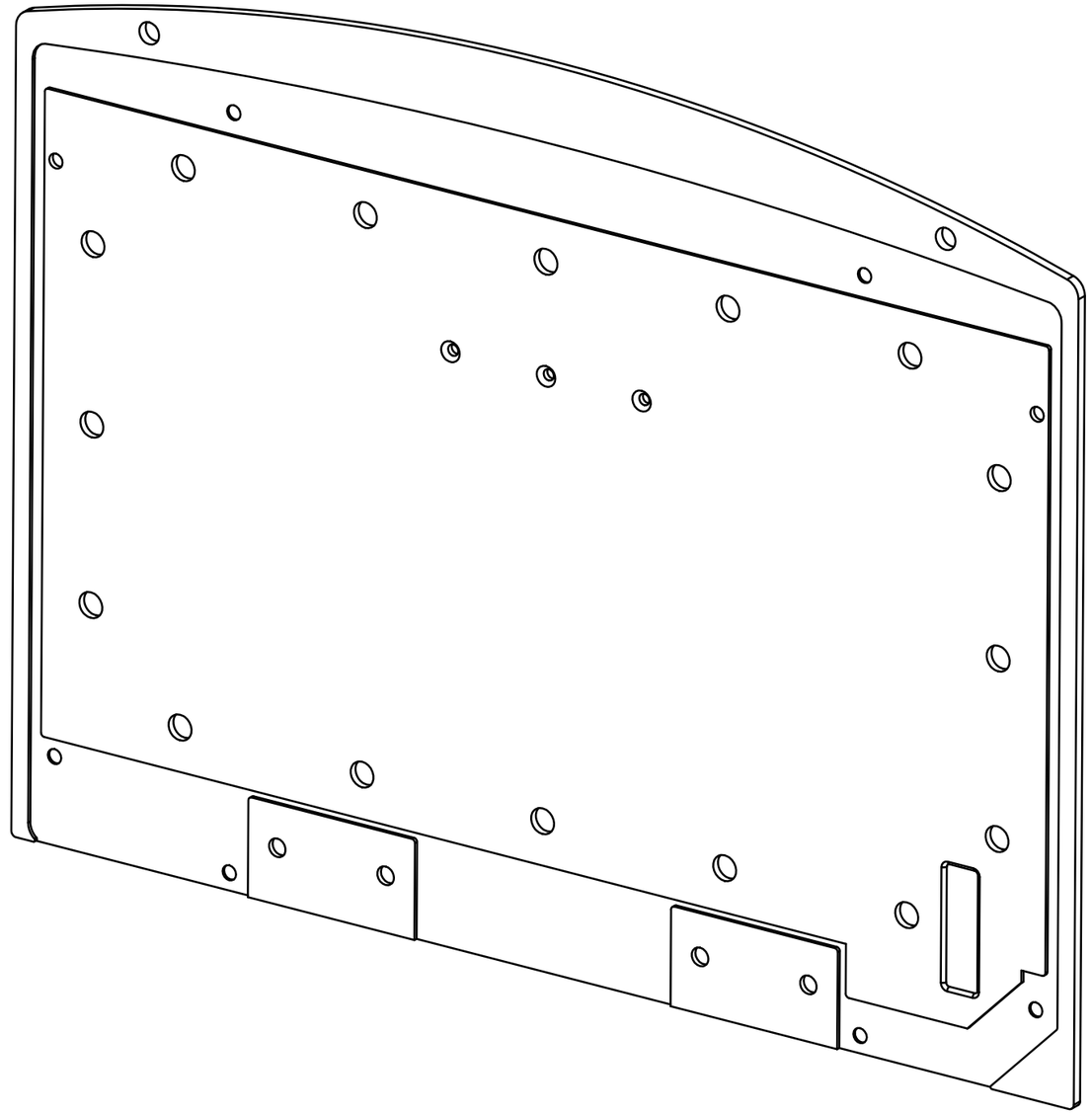

NOTE

1. AVOID SHARP CORNERS AND EDGES
2. ALL BURRS MUST BE REMOVED
3. DIMENSIONLESS FEATURES TO BE MEASURED FROM IGS FILE

REV	CN.NO.	DATE	DESCRIPTION	CHECKED	APPROVED	NEXT ASSEMBLY	ITEM	QTY
4								
3								
2								
1								
0		19.08.16	ORIGINAL			DSA 36 109 0 022	4	1

MATERIAL: ALUMINIUM HE-30	FINISH: YELLOW CC COATING	PROJ.	TOL.GEN. ± IS:2102 TOL.AXIS. ± (MED)	PRJ. 109	
DRAWN: THUSHANTH	CHECKED	APPROVED	DIMNS: mm / SCALE: NTS	TITLE: KEY BOARD BACK PLATE	
DATE 19.08.16	DATE	DATE	DRG. NUMBER: DPD 36 109 0 108	SIZE: A3	ISSUE: 1
KERALA STATE ELECTRONICS DEVELOPMENT CORPORATION LIMITED.				NO.OF SHEETS: 4 / 4	

RESTRICTED

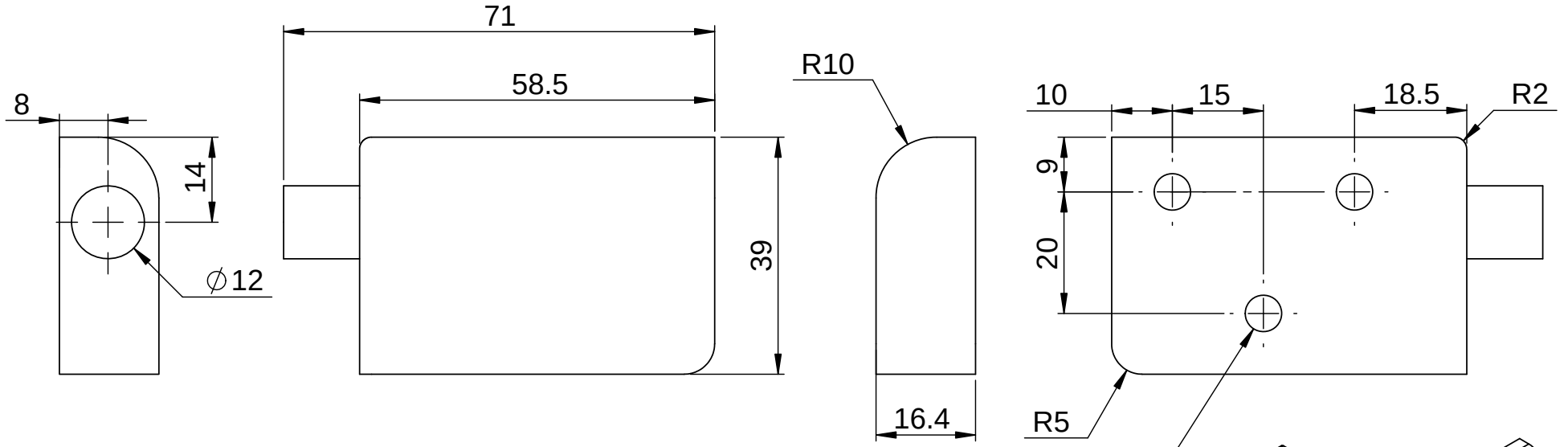

NOTE:

AVOID SHARP EDGES AND CORNERS

4								
3								
2								
1								
0		21.09.17	ORIGINAL			DSA 36 109 0 022	17	01
REV	CN.NO.	DATE	DESCRIPTION	CHECKED	APPROVED	NEXT ASSEMBLY	ITEM	QTY

MATERIAL: ALUMINIUM HE-30	FINISH: YELLOW CC COATING	PROJ.	TOL.GEN. ± IS: 2102 TOL.AXIS. ± (MED.)	PRJ. 109	
DRAWN: MALIKSAD	CHECKED	APPROVED	DIMNS: mm	SCALE: NTS	TITLE: KEY BOARD LEFT HINGE
DATE 21.09.17	DATE	DATE	DRG. NUMBER: DPD 36 109 0 220	SIZE: A4	ISSUE: 1
KERALA STATE ELECTRONICS DEVELOPMENT CORPORATION LIMITED				NO.OF SHEETS: 1 / 1	

RESTRICTED

RESTRICTED

RESTRICTED

DRILL ⌀6.2, ↧15 AND M6 HELICOIL TAP, 3 Nos

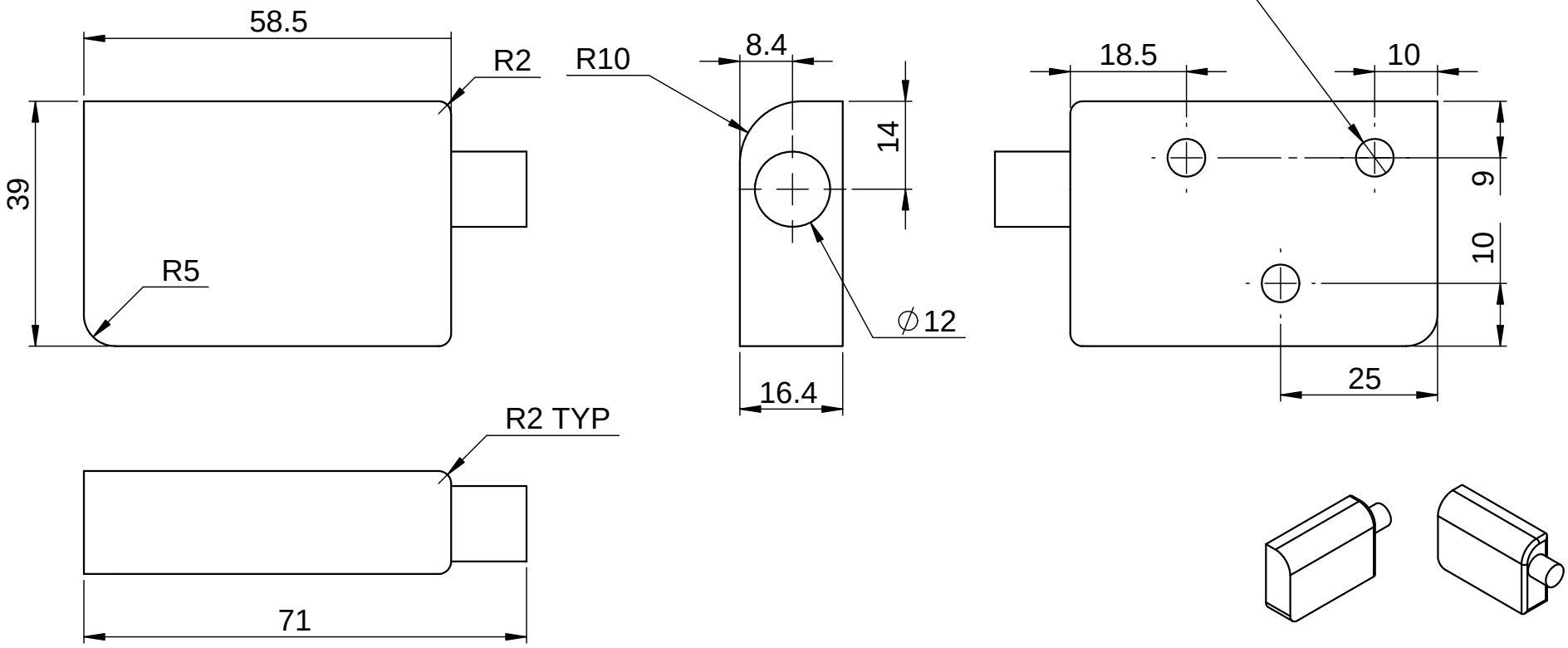

NOTE:

AVOID SHARP EDGES AND CORNERS.

REV	CN.NO.	DATE	DESCRIPTION	CHECKED	APPROVED	NEXT ASSEMBLY	ITEM	QTY
4								
3								
2								
1								
0		23.09.17	ORIGINAL			DSA 36 109 0 022	08	01

MATERIAL	FINISH	PROJ.		PRJ.
ALUMINIUM HE-30	YELLOW CC COATING		TOL.GEN. ± IS: 2102 TOL.AXIS. ± (MED.)	109

DRAWN	CHECKED	APPROVED	DIMNS	SCALE	TITLE
MALIKSAD			mm	NTS	KEY BOARD RIGHT HINGE
DATE 23.09.17	DATE	DATE	DRG. NUMBER		SIZE: A4 / ISSUE: 1
KERALA STATE ELECTRONICS DEVELOPMENT CORPORATION LIMITED			DPD 36 109 0 111		NO.OF SHEETS: 1 / 1

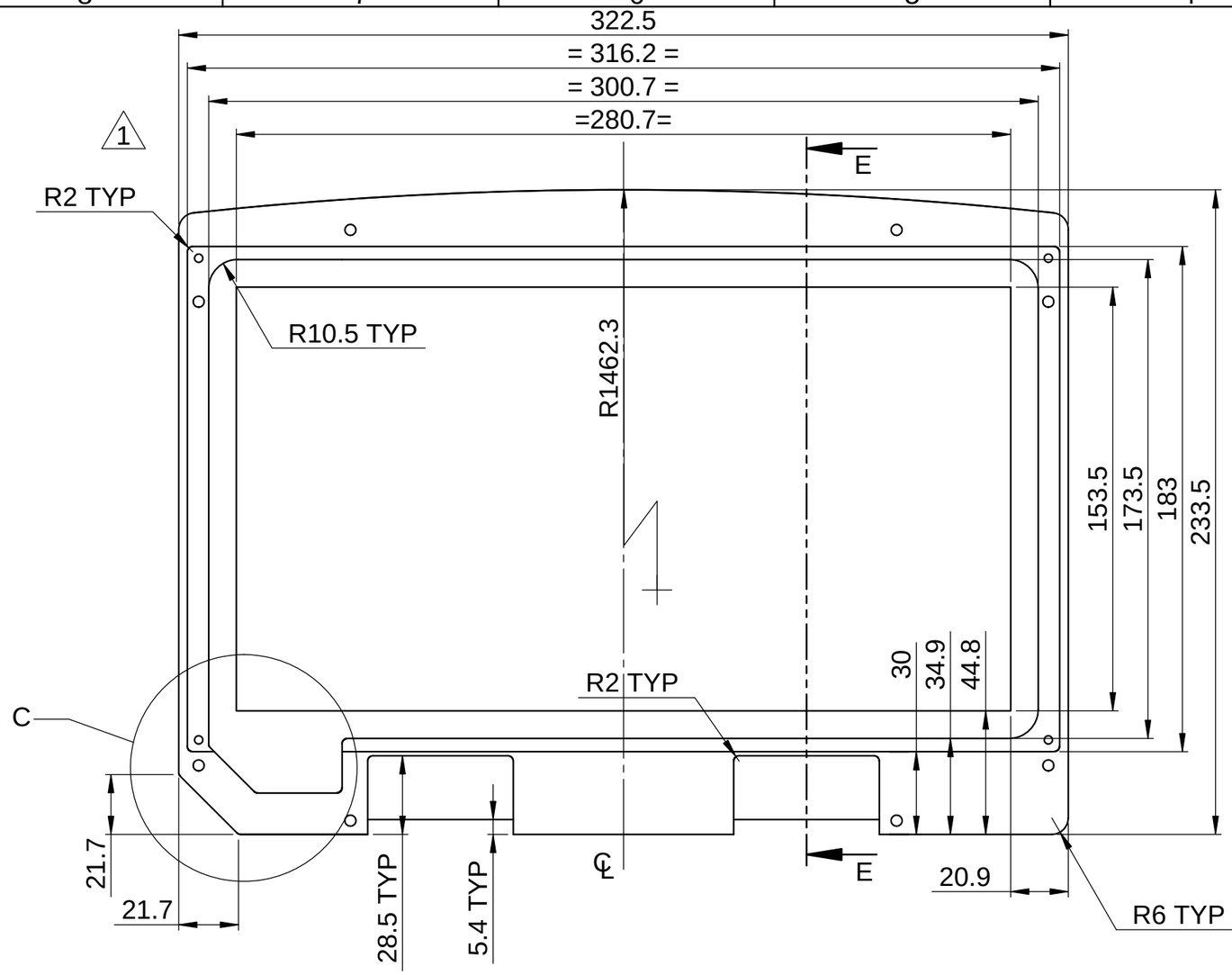

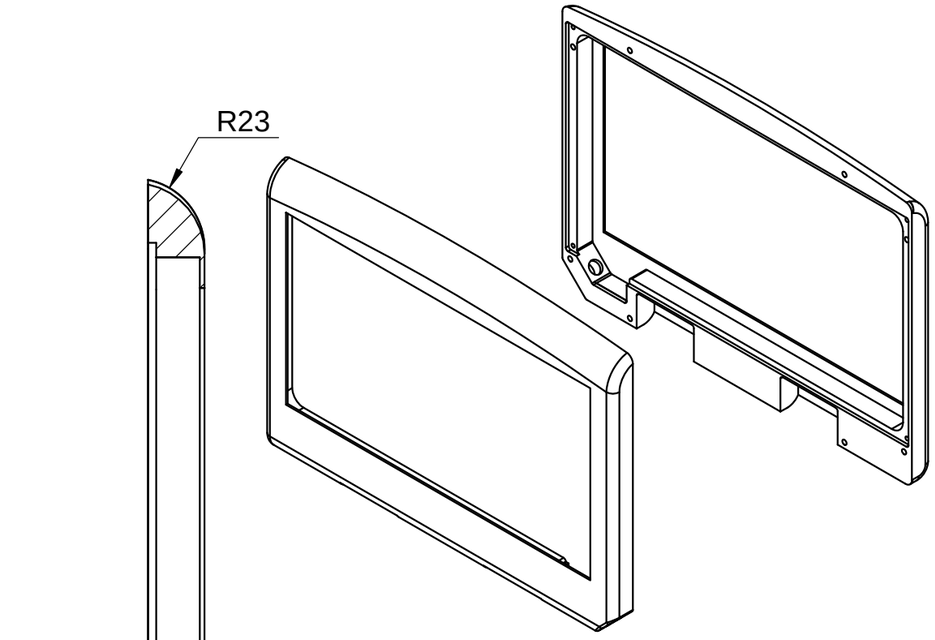

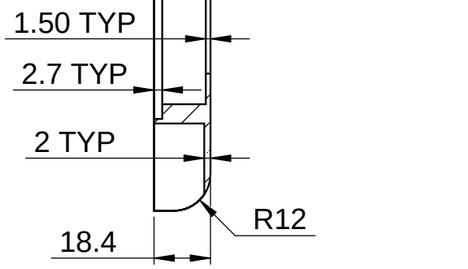

SECTION E-E

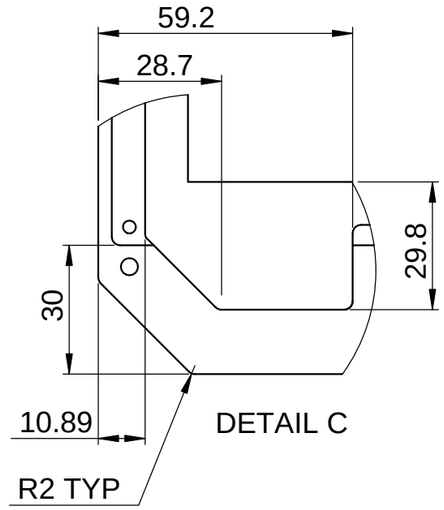

DETAIL C

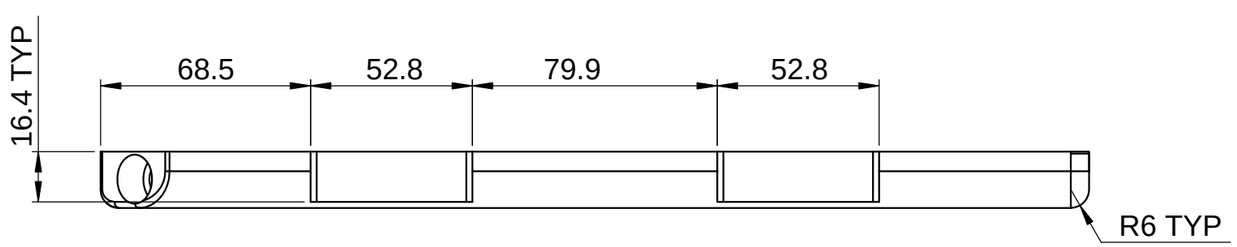

NOTE

1. AVOID SHARP CORNERS AND EDGES
2. ALL BURRS MUST BE REMOVED
3. DIMENSIONLESS FEATURES TO BE MEASURED FROM IGS

REV	CN.NO.	DATE	DESCRIPTION	CHECKED	APPROVED	NEXT ASSEMBLY	ITEM	QTY
4								
3								
2								
1		22.08.19	REVISED					
0		06.08.16	ORIGINAL			DSA 36 109 0 022	1	1

MATERIAL: ALUMINIUM HE-30	FINISH: YELLOW CC COATING	PROJ.	TOL.GEN. ± IS:2102 TOL.AXIS. ± (MED)	PRJ. 109	
DRAWN: MALIKSAD	CHECKED	APPROVED	DIMNS: mm / SCALE: NTS	TITLE: KEY BOARD TRAY	
DATE 22.08.19	DATE	DATE	DRG. NUMBER: DPD 36 109 0 113	SIZE: A3	ISSUE: 1
KERALA STATE ELECTRONICS DEVELOPMENT CORPORATION LIMITED.				NO.OF SHEETS: 1/2	

SL NO	REF	DESCRIPTION	QTY
1	A	∅ 4.1↧13, M4 HELICOIL TAP	8
2	B	∅ 3.1↧13, M3 HELICOIL TAP	4

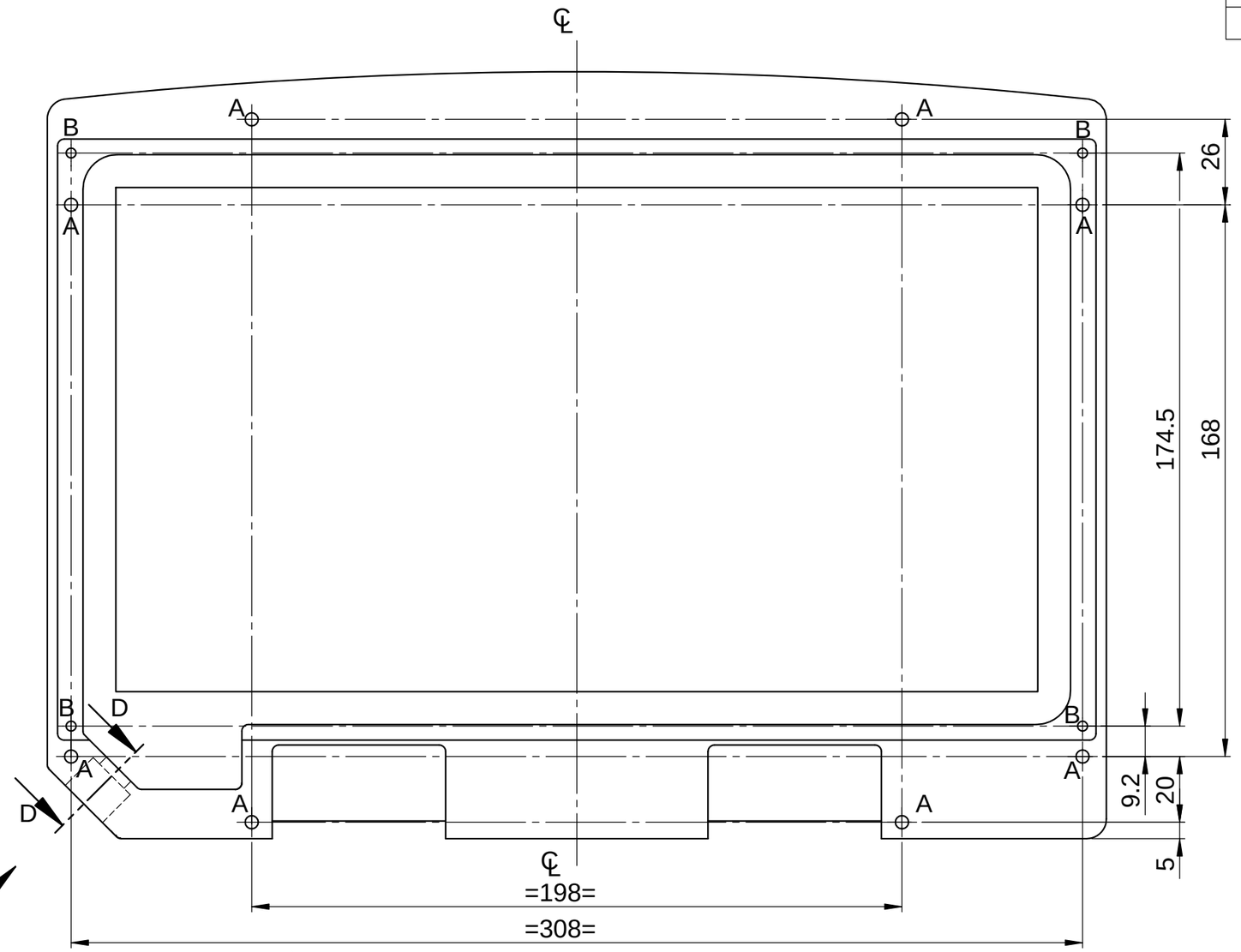

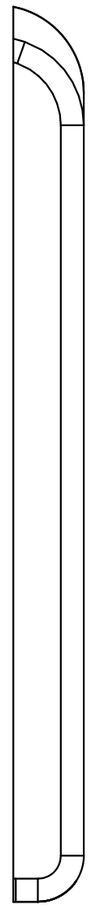

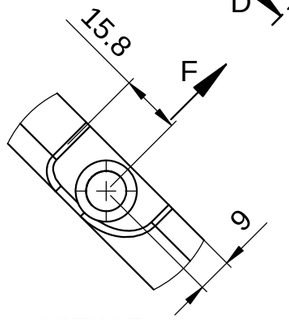

VIEW F

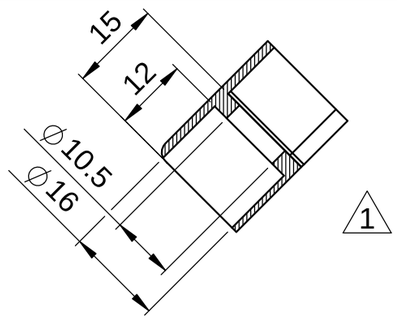

SECTION D-D

REV	CN.NO.	DATE	DESCRIPTION	CHECKED	APPROVED	NEXT ASSEMBLY	ITEM	QTY
4								
3								
2								
1		22.08.19	REVISED					
0		06.08.16	ORIGINAL			DSA 36 109 0 022	1	1

MATERIAL: ALUMINIUM HE 30	FINISH: YELLOW CC COATING	PROJ.	TOL.GEN. ± IS:2102 TOL.AXIS. ± (MED)
PRJ.: 109			

DRAWN	CHECKED	APPROVED	DIMNS	SCALE
MALIKSAD			mm	NTS
DATE 22.08.19	DATE	DATE		

TITLE: KEY BOARD TRAY

KERALA STATE ELECTRONICS DEVELOPMENT CORPORATION LIMITED

DRG. NUMBER: DPD 36 109 0 113

SIZE	ISSUE
A3	1
NO.OF SHEETS	2 / 2

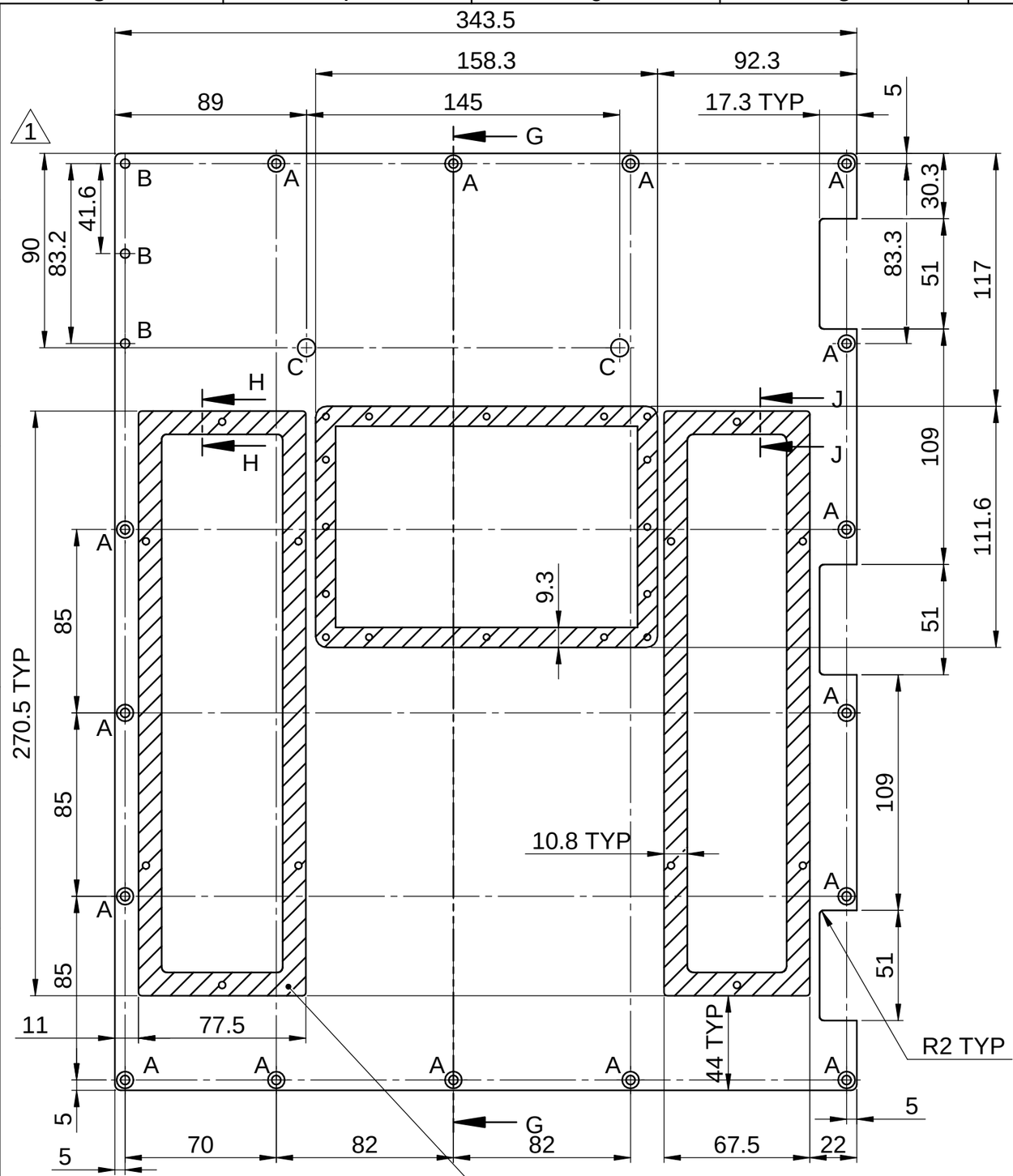

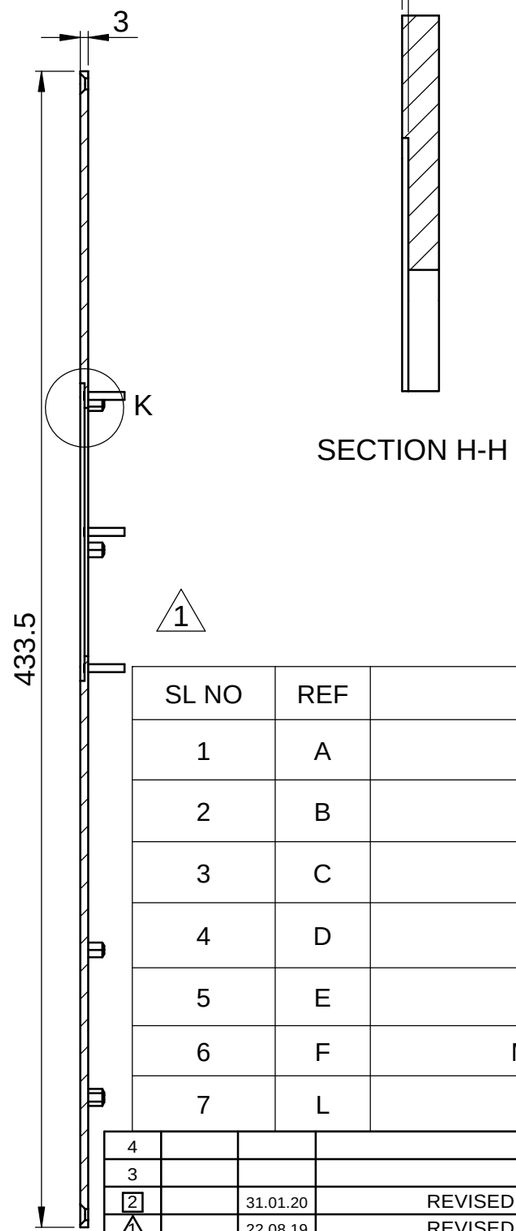

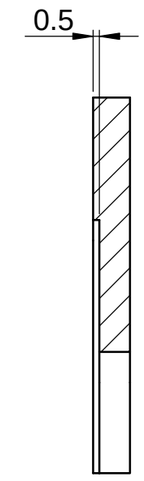

SECTION H-H

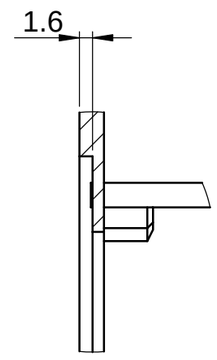

DETAIL K

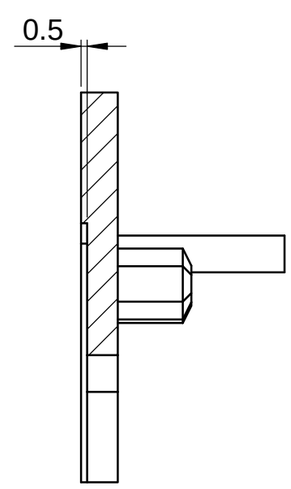

SECTION J-J

SL NO	REF	DESCRIPTION	QTY
1	A	∅4.2 ⌵ ∅7.8	16
2	B	∅4.2	3
3	C	∅8.2	2
4	D	M3x6 BLIND NUT	2 10
5	E	∅3 HOLES FOR RIVET	2 8
6	F	M3x10 CLINCH SCREW	8
7	L	∅3.2	2 2

REV	CN.NO.	DATE	DESCRIPTION	CHECKED	APPROVED	NEXT ASSEMBLY	ITEM	QTY
4								
3								
2		31.01.20	REVISED					
1		22.08.19	REVISED					
0		19.08.17	ORIGINAL			DSA 36 109 0 019	1	1

MATERIAL: ALUMINIUM H32-5052	FINISH: YELLOW CC COATING	PROJ.	PRJ. 109
		TOL.GEN. ± IS:2102 TOL.AXIS. ± (MED)	

DRAWN	CHECKED	APPROVED	DIMNS	SCALE	TITLE
MALIKSAD			mm	NTS	LEFT PLATE
DATE 22.08.19	DATE	DATE			

KERALA STATE ELECTRONICS DEVELOPMENT CORPORATION LIMITED

DRG. NUMBER: DPD 36 109 0 037

SIZE	ISSUE
A3	1
NO.OF SHEETS	1 / 2

NOTE

1. AVOID SHARP CORNERS AND EDGES
2. ALL BURRS MUST BE REMOVED

HATCHED AREA TO BE MASKED FROM PAINTING

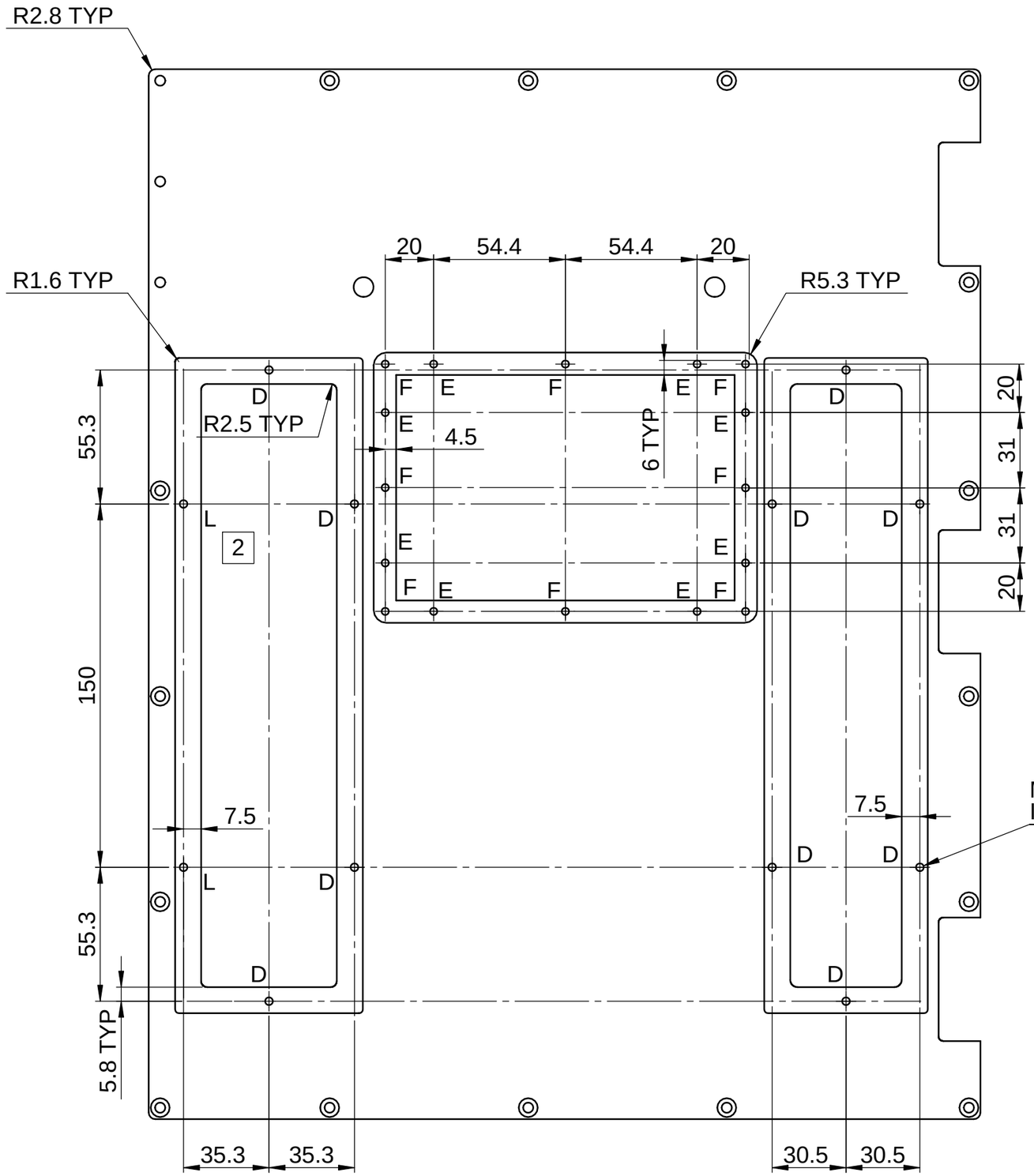

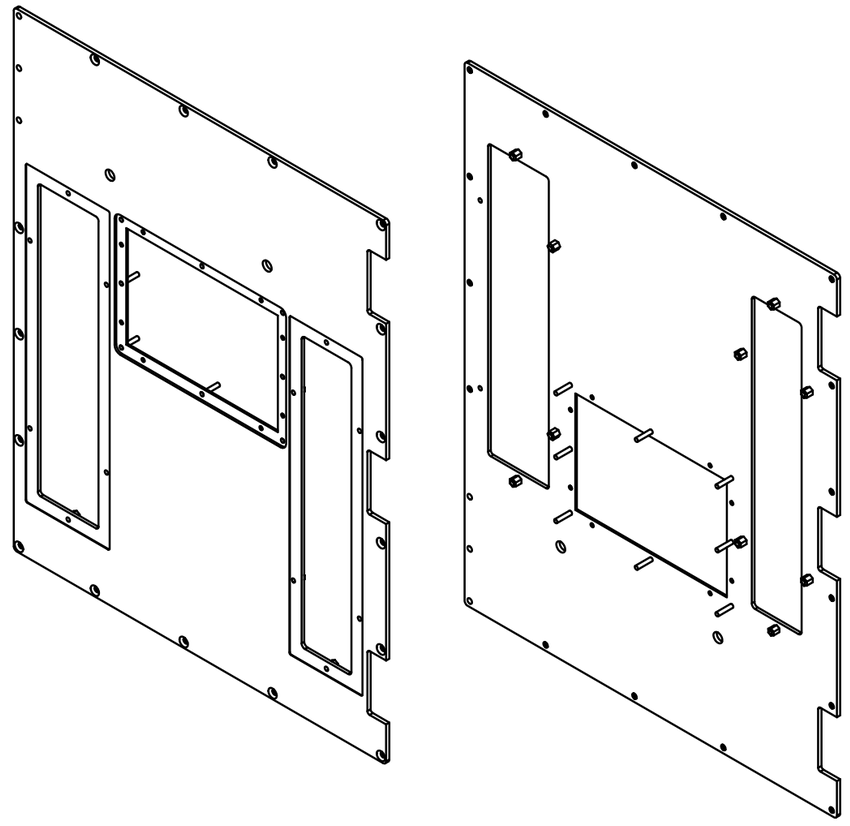

REV	CN.NO.	DATE	DESCRIPTION	CHECKED	APPROVED	NEXT ASSEMBLY	ITEM	QTY
4								
3								
2		31.01.20	REVISED					
1		22.08.19	REVISED					
0		19.08.17	ORIGINAL			DSA 36 109 0 019	1	1

MATERIAL: ALUMINIUM H32-5052	FINISH: YELLOW CC COATING	PROJ.	TOL.GEN. ± IS:2102 TOL.AXIS. ± (MED)	PRJ. 109	
DRAWN: MALIKSAD	CHECKED	APPROVED	DIMNS: mm	SCALE: NTS	TITLE: LEFT PLATE
DATE 22.08.19	DATE	DATE	DRG. NUMBER: DPD 36 109 0 037	SIZE: A3	ISSUE: 1
KERALA STATE ELECTRONICS DEVELOPMENT CORPORATION LIMITED.				NO.OF SHEETS: 2 / 2	

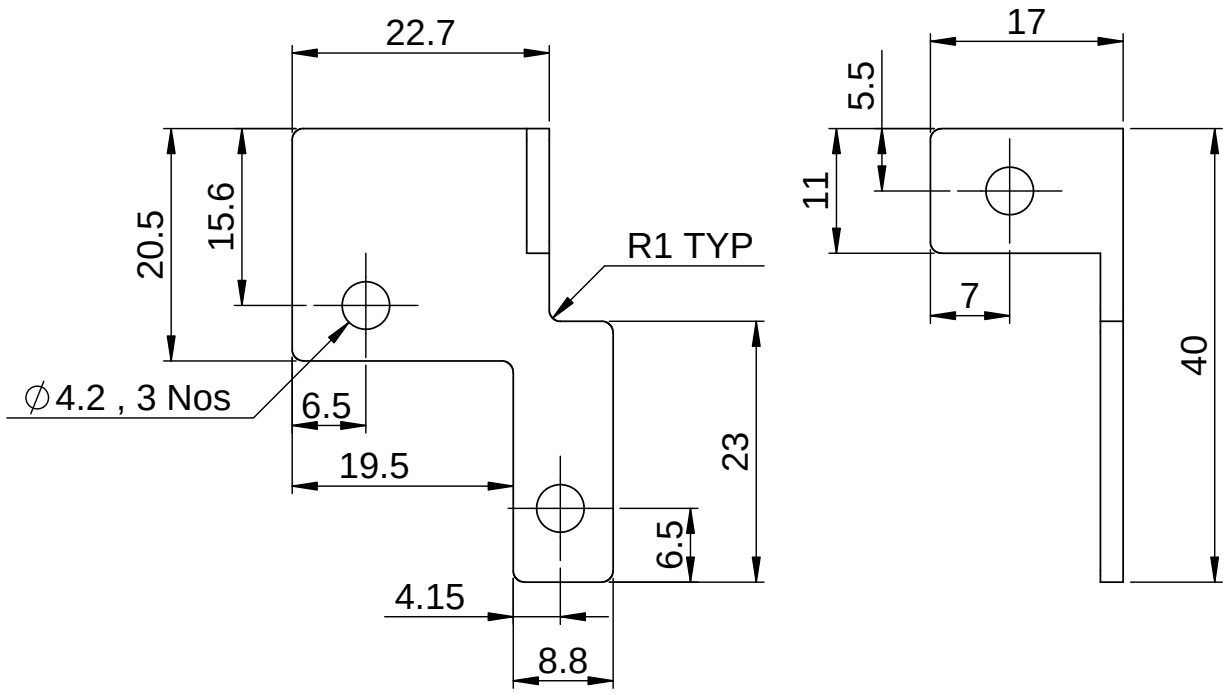

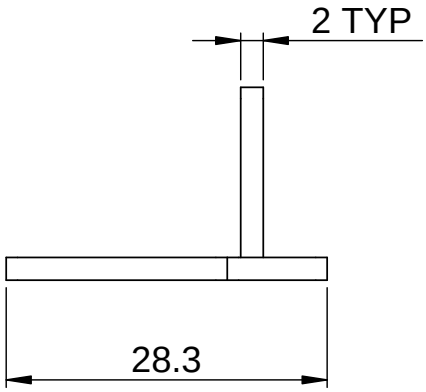

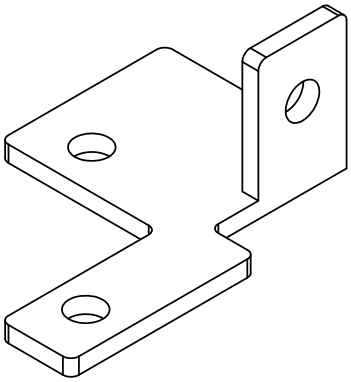

REV	CN.NO.	DATE	DESCRIPTION	CHECKED	APPROVED	NEXT ASSEMBLY	ITEM	QTY
4								
3								
2								
1								
0		17.10.17	ORIGINAL			DSA 36 109 0 011		1

MATERIAL: SS 316	FINISH:	PROJ.	TOL.GEN. ± IS:2102 TOL.AXIS. ± (MED)	PRJ. 109	
DRAWN: MALIKSAD	CHECKED:	APPROVED:	DIMNS: mm	SCALE: NTS	TITLE: LOCKER
DATE 16.09.17	DATE	DATE	DRG. NUMBER: DPD 36 109 0 272	SIZE: A4	ISSUE: 1
KERALA STATE ELECTRONICS DEVELOPMENT CORPORATION LIMITED				NO.OF SHEETS: 1 / 1	

RESTRICTED

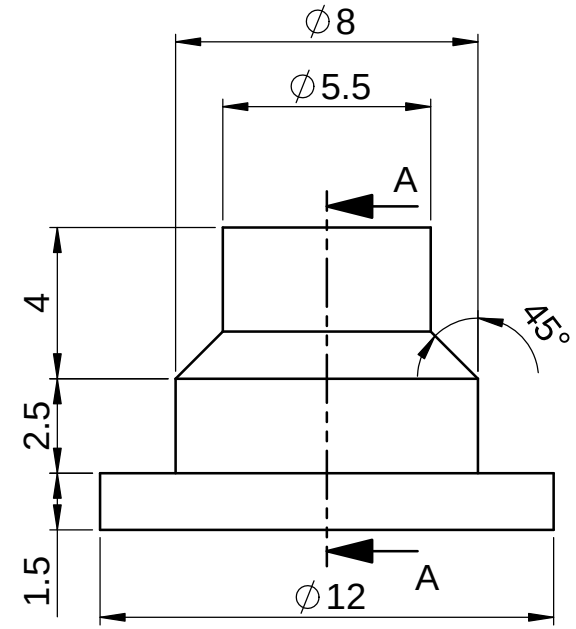

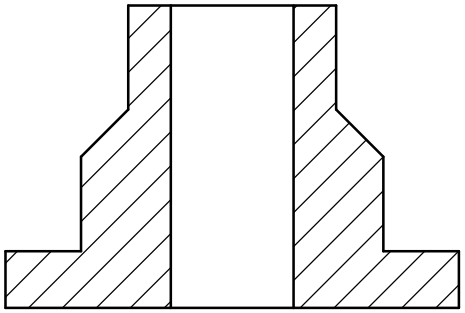

SECTION A-A

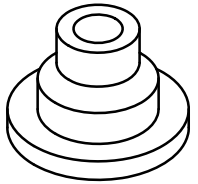

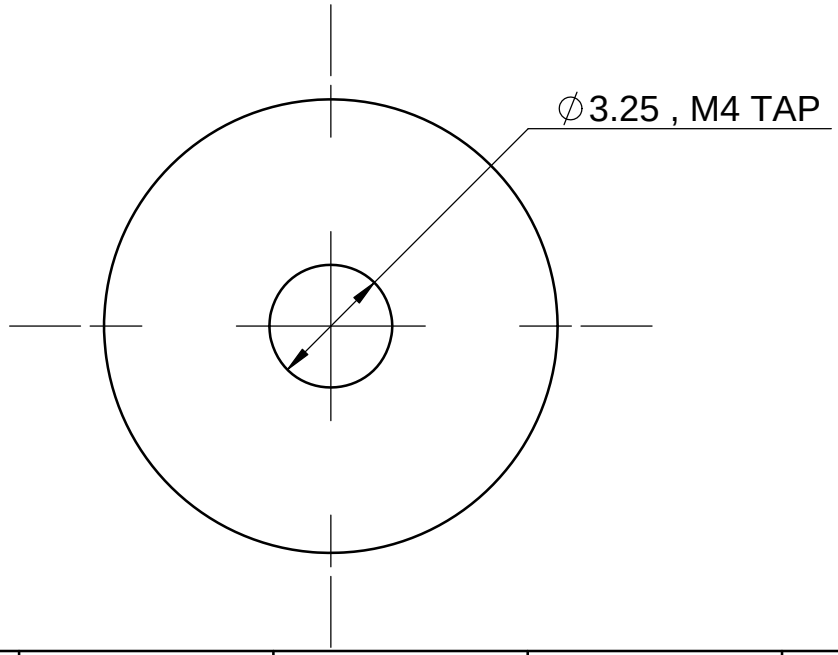

REV	CN.NO.	DATE	DESCRIPTION	CHECKED	APPROVED	NEXT ASSEMBLY	ITEM	QTY
4								
3								
2								
1								
0		13.11.19	ORIGINAL			-	-	-

MATERIAL	FINISH	PROJ.	TOL.GEN. ± IS: 2102 TOL.AXIS. ± (MED.)	PRJ.
SS-316	-			109

DRAWN	CHECKED	APPROVED	DIMNS	SCALE	TITLE
MALIKSAD	MANJULAL	VK	mm	NTS	LOCKING LEVER BUSH

DATE 13.11.19	DATE	DATE	DRG. NUMBER	SIZE	ISSUE
KERALA STATE ELECTRONICS DEVELOPMENT CORPORATION LIMITED			DPD 36 109 0 277	A4	1
				NO.OF SHEETS	1 / 1

RESTRICTED

RESTRICTED

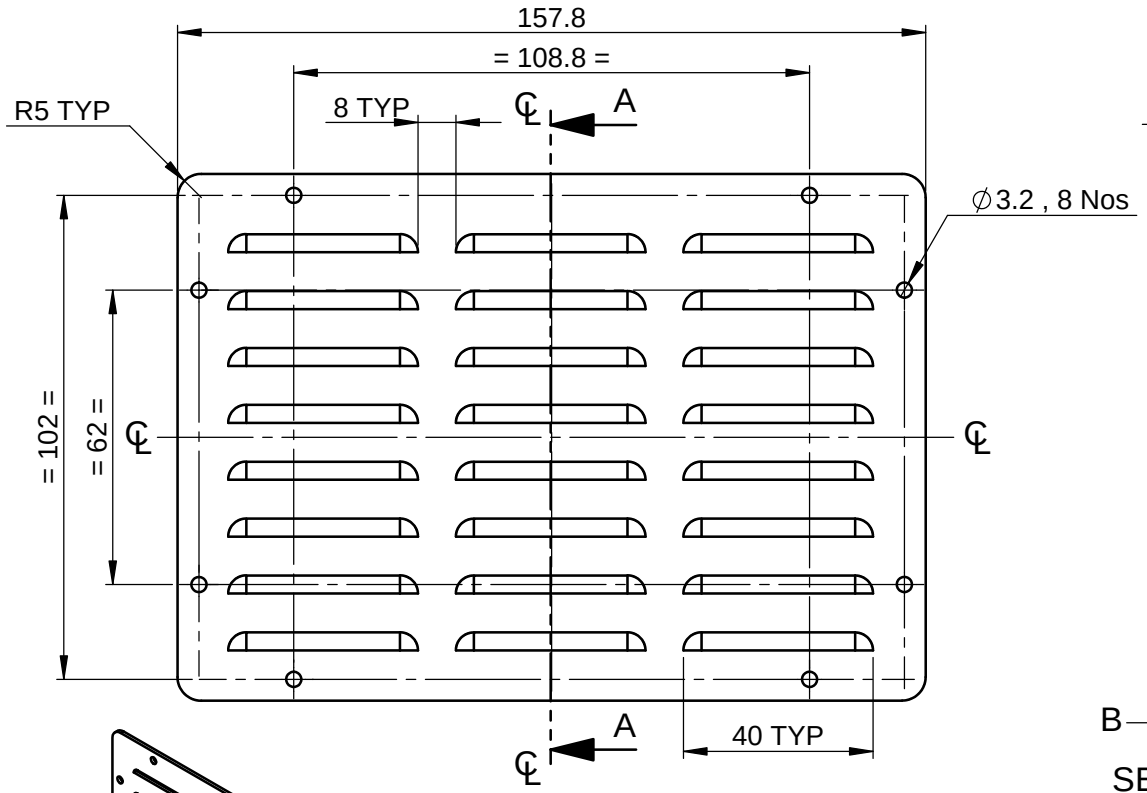

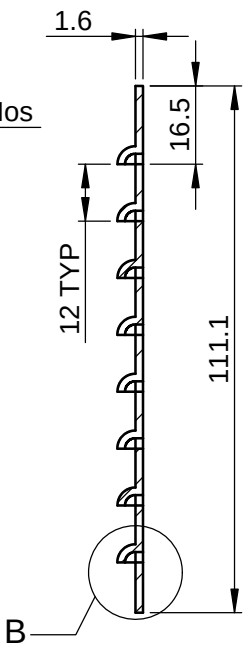

SECTION A-A

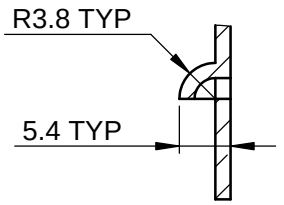

DETAIL B

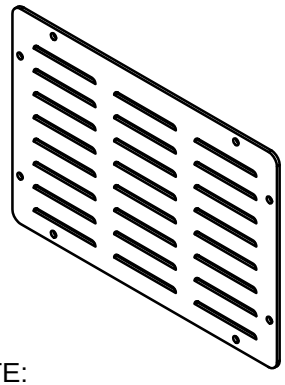

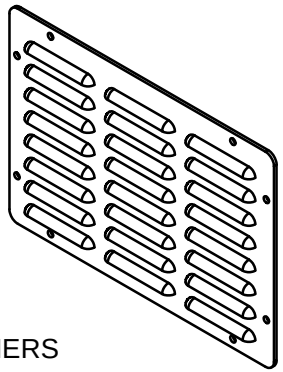

NOTE:

AVOID SHARP EDGES AND CORNERS

REV	CN.NO.	DATE	DESCRIPTION	CHECKED	APPROVED	NEXT ASSEMBLY	ITEM	QTY
4								
3								
2								
1						DSA 36 109 0 015	09	1
0		26.08.19	ORIGINAL			DSA 36 109 0 019	03	1

MATERIAL	FINISH	PROJ.	TOL.GEN. ± IS: 2102 TOL.AXIS. ± (MED.)	PRJ.
1.6 THICK ALUMINIUM SHEET AL 5050-H32	YELLOW CC COATING			109

DRAWN	CHECKED	APPROVED	DIMNS	SCALE	TITLE
MALIKSAD			mm	NTS	LOUVERS PLATE
DATE 26.08.19	DATE	DATE	DRG. NUMBER		SIZE A4 / ISSUE 1
KERALA STATE ELECTRONICS DEVELOPMENT CORPORATION LIMITED			DPD 36 109 0 062		NO.OF SHEETS 1 / 1

RESTRICTED

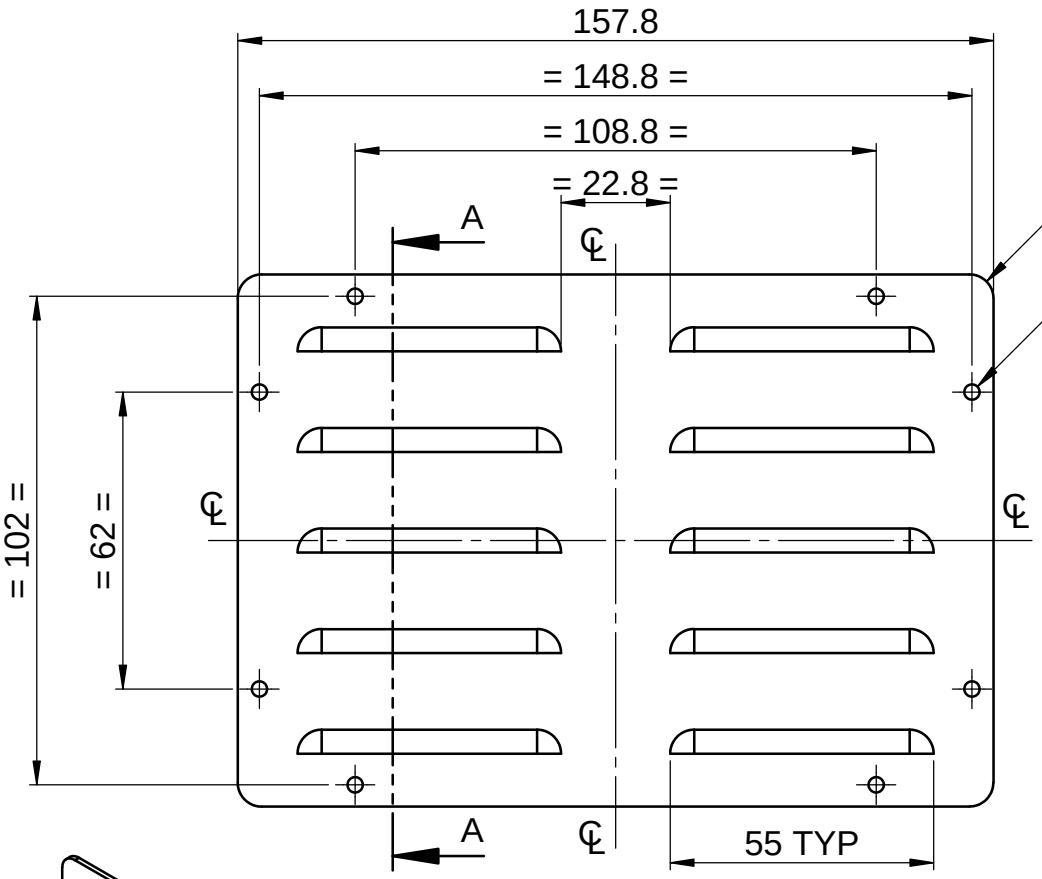

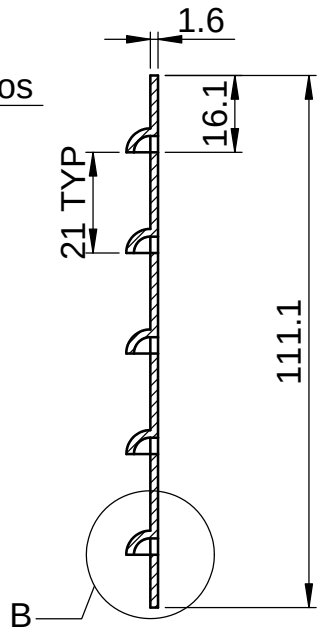

SECTION A-A

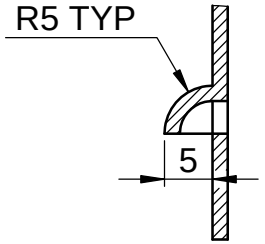

DETAIL B

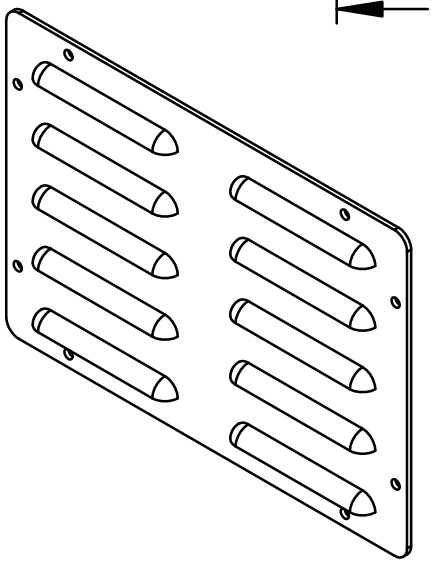

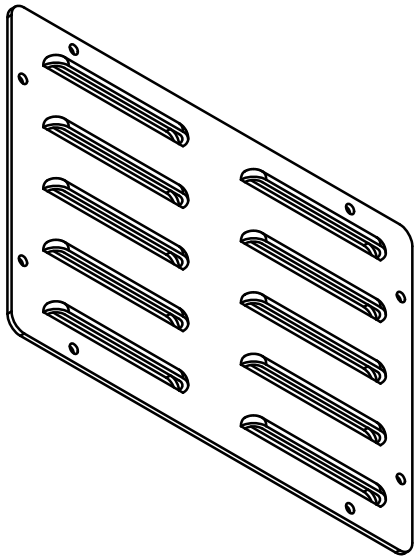

4								
3								
2								
1								
0		17.10.17	ORIGINAL			DSA 36 109 0 019	3	1
REV	CN.NO.	DATE	DESCRIPTION	CHECKED	APPROVED	NEXT ASSEMBLY	ITEM	QTY

MATERIAL: 1.6 THICK ALUMINIUM SHEET AL. 5052-H32	FINISH: YELLOW CC COATING	PROJ.	TOL.GEN. ± IS: 2102 TOL.AXIS. ± (MED.)	PRJ. 109	
DRAWN: NANDHU	CHECKED	APPROVED	DIMNS: mm	SCALE: NTS	TITLE: LOUVERS PLATE
DATE 17.10.17	DATE	DATE	DRG. NUMBER: DPD 36 109 0 062	SIZE: A4	ISSUE: 1
KERALA STATE ELECTRONICS DEVELOPMENT CORPORATION LIMITED				NO.OF SHEETS: 1 / 1	

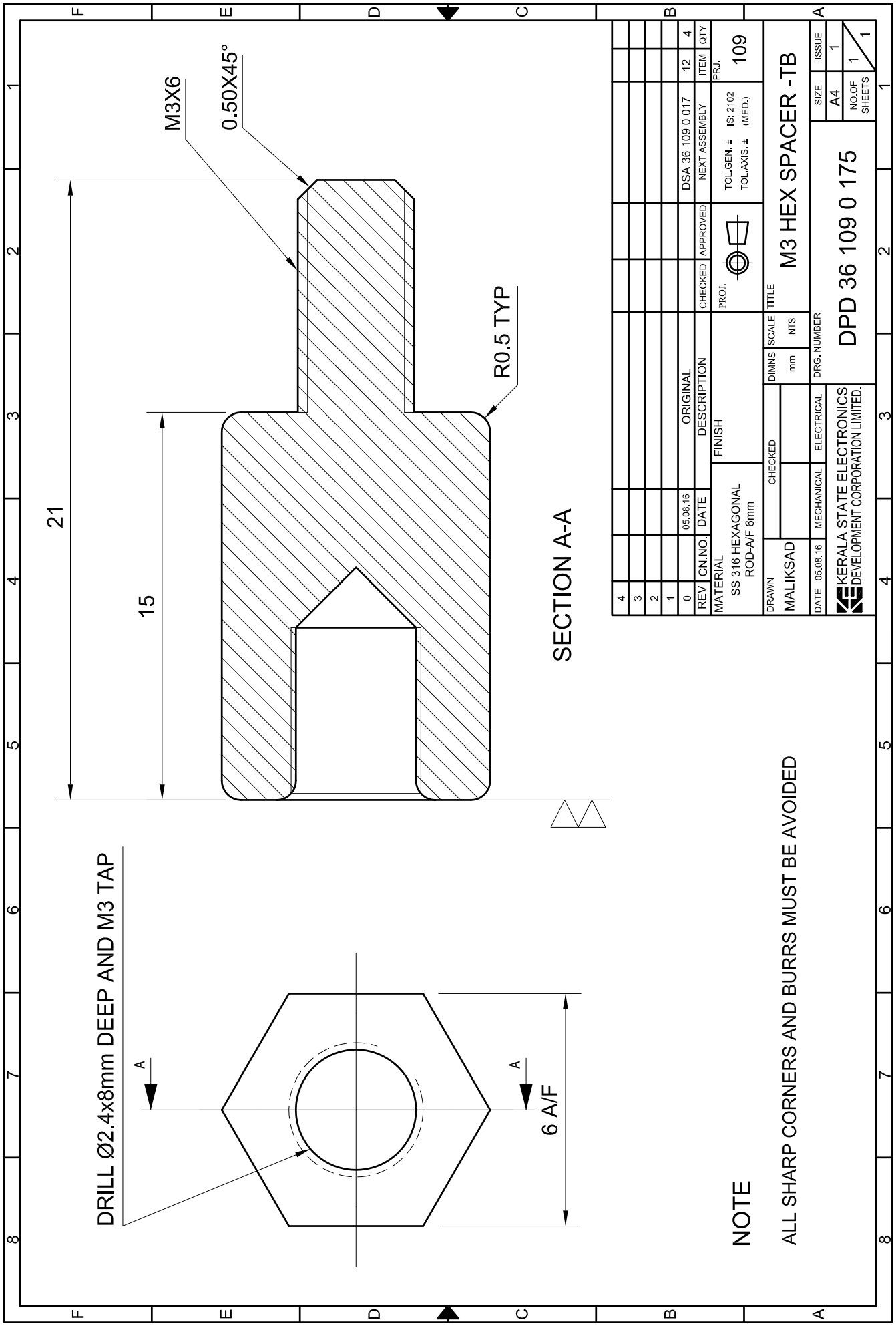
M3X6
0.50X45°
R0.5 TYP
21
15
SECTION A-A
DRILL Ø2.4x8mm DEEP AND M3 TAP
A
A
6 A/F
NOTE
ALL SHARP CORNERS AND BURRS MUST BE AVOIDED
4
3
2
1
0
REV
CN.NO.
DATE
ORIGINAL
05.08.16
DESCRIPTION
CHECKED
APPROVED
DSA 36 109 0 017
12
4
ITEM
QTY
NEXT ASSEMBLY
PRJ.
109
TOL.GEN. ± IS: 2102
TOL.AXIS. ± (MED.)
PROJ.
MATERIAL
SS 316 HEXAGONAL
ROD-A/F 6mm
FINISH
DRAWN
MALIKSAD
CHECKED
DIMNS
mm
SCALE
NTS
TITLE
M3 HEX SPACER -TB
DATE 05.08.16
MECHANICAL
ELECTRICAL
DRG. NUMBER
DPD 36 109 0 175
KERALA STATE ELECTRONICS
DEVELOPMENT CORPORATION LIMITED.
SIZE
A4
ISSUE
1
NO.OF SHEETS
1
1

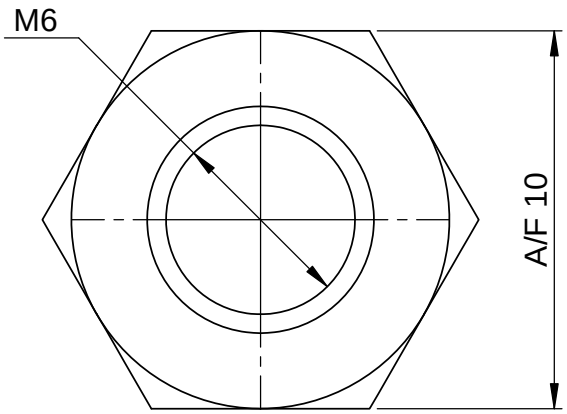

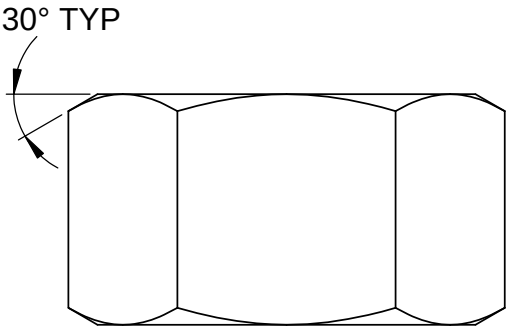

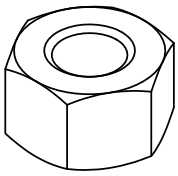

NOTE:

AVOID SHARP EDGES AND CORNERS

REV	CN.NO.	DATE	DESCRIPTION	CHECKED	APPROVED	NEXT ASSEMBLY	ITEM	QTY
4								
3								
2								
1								
0		19.08.17	ORIGINAL			DSA 36 109 0 016	4	3

MATERIAL	FINISH	PROJ.		PRJ.
BRASS	-		TOL.GEN. ± IS:2102 TOL.AXIS. ± (MED)	109

DRAWN	CHECKED	APPROVED	DIMNS	SCALE	TITLE
MALIKSAD			mm	NTS	M6 EARTH STUD NUT-BRASS

DATE 19.08.17	DATE	DATE	DRG. NUMBER	SIZE	ISSUE
KERALA STATE ELECTRONICS DEVELOPMENT CORPORATION LIMITED			DPD 36 109 0 116	A4	1
				NO.OF SHEETS	1 / 1

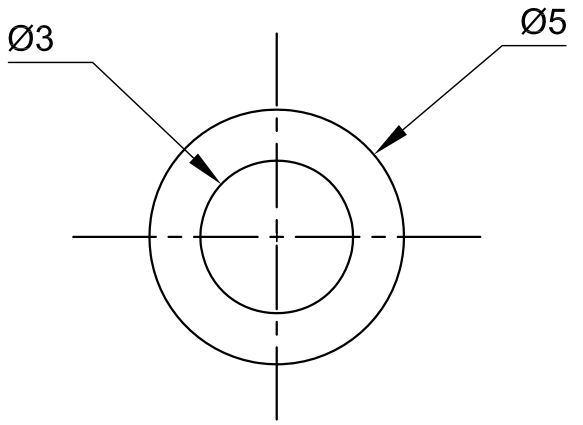

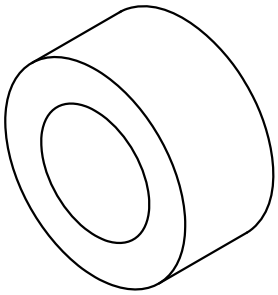

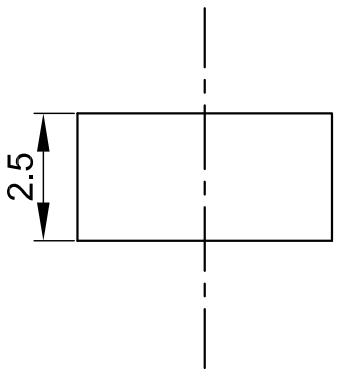

NOTE:
AVOID SHARP EDGES AND CORNERS

REV	CN.NO.	DATE	DESCRIPTION	CHECKED	APPROVED	NEXT ASSEMBLY	ITEM	QTY
4								
3								
2								
1								
0		03.05.17	ORIGINAL			DSA 36 109 1 100	45	2

MATERIAL	FINISH	PROJ.		PRJ.
NYLON	-		TOL.GEN. ± IS:2102 TOL.AXIS. ± (MED)	109

DRAWN	CHECKED	APPROVED	DIMNS	SCALE	TITLE
MALIKSAD			mm	NTS	NYLON SPACER 2.5mm
DATE 03.05.17	DATE	DATE			

KERALA STATE ELECTRONICS DEVELOPMENT CORPORATION LIMITED.

DRG. NUMBER: DPD 36 109 0 163

SIZE	ISSUE
A4	1
NO.OF SHEETS	1 / 1

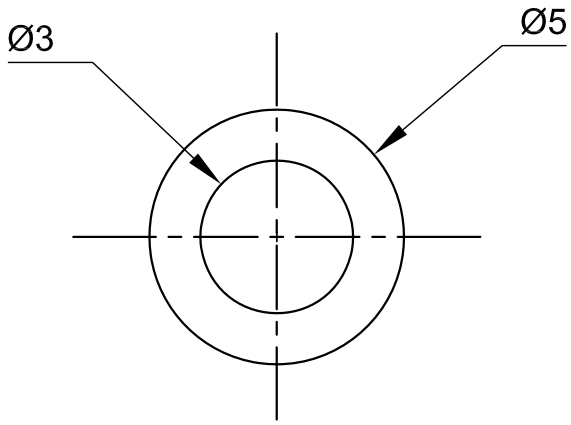

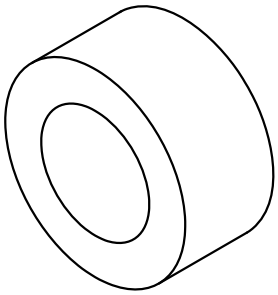

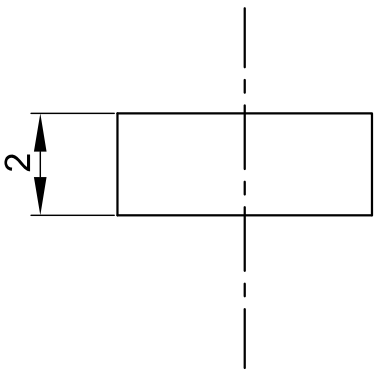

NOTE:
AVOID SHARP EDGES AND CORNERS

REV	CN.NO.	DATE	DESCRIPTION	CHECKED	APPROVED	NEXT ASSEMBLY	ITEM	QTY
4								
3								
2								
1								
0		03.05.17	ORIGINAL			DSA 36 109 1 102	26	2

MATERIAL	FINISH	PROJ.		PRJ.
NYLON	-		TOL.GEN. ± IS:2102 TOL.AXIS. ± (MED)	109

DRAWN	CHECKED	APPROVED	DIMNS	SCALE	TITLE
MALIKSAD			mm	NTS	NYLON SPACER 2mm
DATE 03.05.17	DATE	DATE			

KERALA STATE ELECTRONICS DEVELOPMENT CORPORATION LIMITED.

DRG. NUMBER: DPD 36 109 0 164

SIZE	ISSUE
A4	1
NO.OF SHEETS	1 / 1

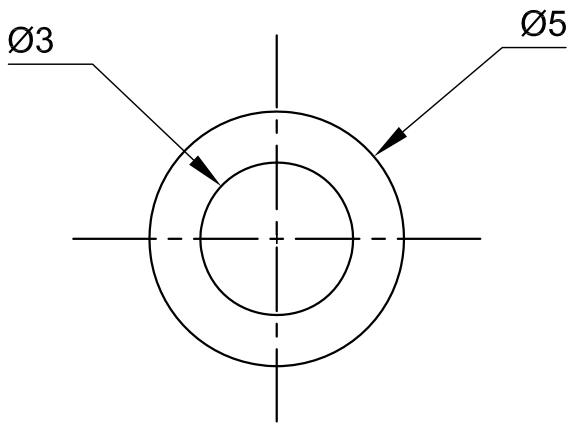

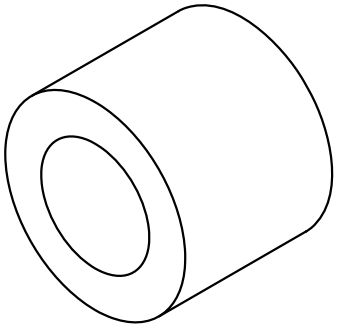

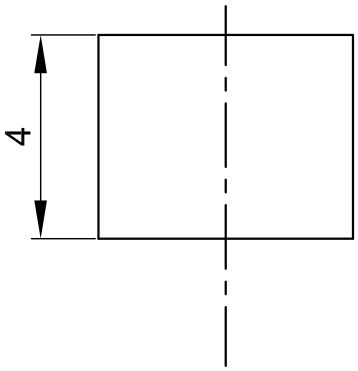

NOTE:
AVOID SHARP EDGES AND CORNERS

REV	CN.NO.	DATE	DESCRIPTION	CHECKED	APPROVED	NEXT ASSEMBLY	ITEM	QTY
4								
3								
2								
1								
0		03.05.17	ORIGINAL			DSA 36 109 1 100	46	4

MATERIAL	FINISH	PROJ.		PRJ.
NYLON	-		TOL.GEN. ± IS:2102 TOL.AXIS. ± (MED)	109

DRAWN	CHECKED	APPROVED	DIMNS	SCALE	TITLE
MALIKSAD			mm	NTS	NYLON SPACER 4mm
DATE 03.05.17	DATE	DATE			

KERALA STATE ELECTRONICS DEVELOPMENT CORPORATION LIMITED.

DRG. NUMBER: DPD 36 109 0 165

SIZE	ISSUE
A4	1
NO.OF SHEETS	1 / 1

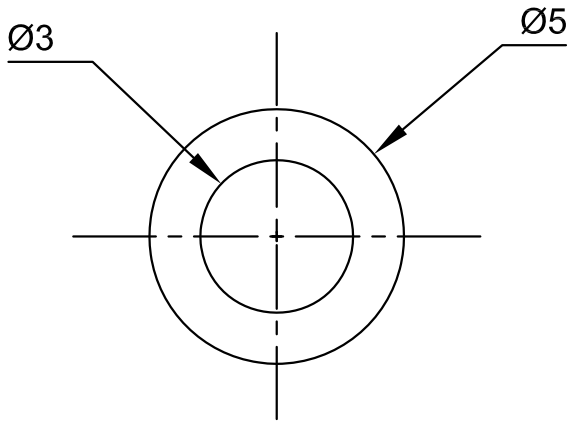

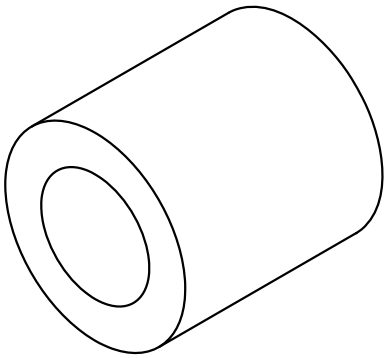

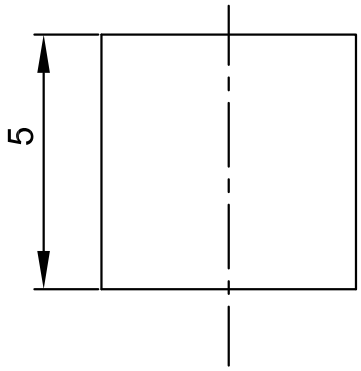

NOTE:
AVOID SHARP EDGES AND CORNERS

REV	CN.NO.	DATE	DESCRIPTION	CHECKED	APPROVED	NEXT ASSEMBLY	ITEM	QTY
4								
3								
2								
1								
0		03.05.17	ORIGINAL			DSA 36 109 0 107	12	4

MATERIAL	FINISH	PROJ.		PRJ.
NYLON	-		TOL.GEN. ± IS:2102 TOL.AXIS. ± (MED)	109

DRAWN	CHECKED	APPROVED	DIMNS	SCALE	TITLE
MALIKSAD			mm	NTS	NYLON SPACER 5mm
DATE 03.05.17	DATE	DATE			

KERALA STATE ELECTRONICS DEVELOPMENT CORPORATION LIMITED.

DRG. NUMBER: DPD 36 109 0 168

SIZE	ISSUE
A4	1
NO.OF SHEETS	1 / 1

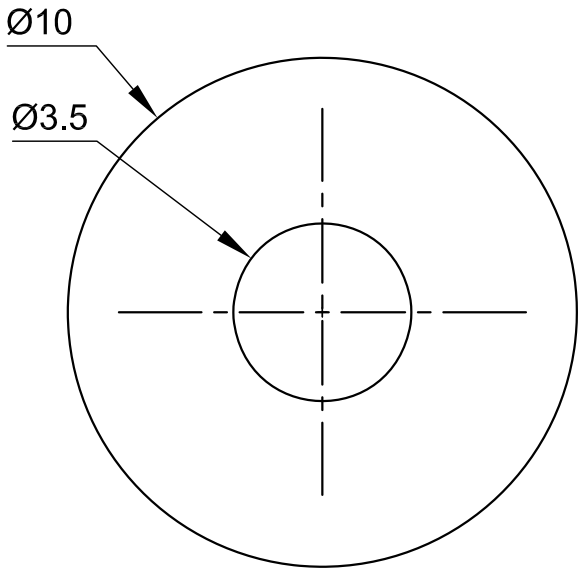

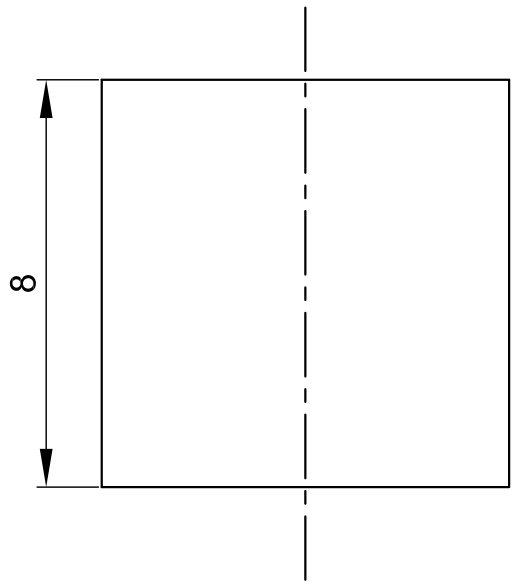

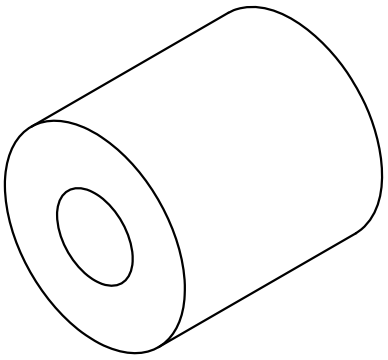

NOTE:
AVOID SHARP EDGES AND CORNERS

REV	CN.NO.	DATE	DESCRIPTION	CHECKED	APPROVED	NEXT ASSEMBLY	ITEM	QTY
4								
3								
2								
1								
0		03.05.17	ORIGINAL			DSA 36 109 0 021	17	8

MATERIAL: NYLON	FINISH: -	PROJ.	TOL.GEN. ± IS:2102 TOL.AXIS. ± (MED)	PRJ. 109	
DRAWN: MALIKSAD	CHECKED	APPROVED	DIMNS: mm	SCALE: NTS	TITLE: NYLON SPACER 6mm
DATE 03.05.17	DATE	DATE	DRG. NUMBER: DPD 36 109 0 176	SIZE: A4	ISSUE: 1
KERALA STATE ELECTRONICS DEVELOPMENT CORPORATION LIMITED.				NO.OF SHEETS: 1 / 1	

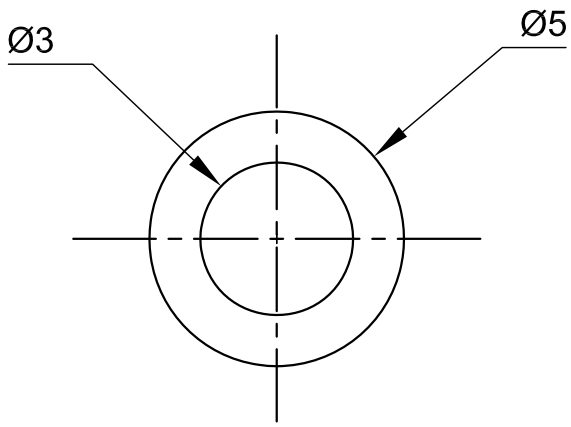

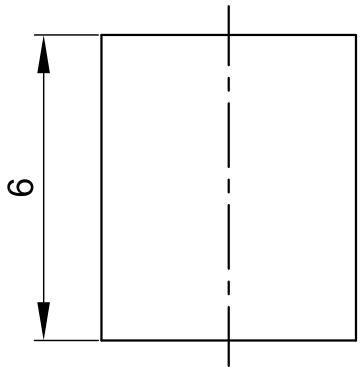

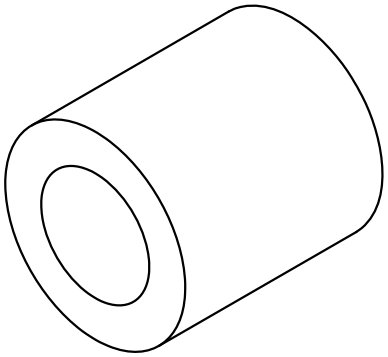

NOTE:
AVOID SHARP EDGES AND CORNERS

REV	CN.NO.	DATE	DESCRIPTION	CHECKED	APPROVED	NEXT ASSEMBLY	ITEM	QTY
4								
3								
2								
1								
0		03.05.17	ORIGINAL			DSA 36 109 0 103	26	4

MATERIAL: NYLON	FINISH: -	PROJ.	TOL.GEN. ± IS:2102 TOL.AXIS. ± (MED)	PRJ. 109	
DRAWN: MALIKSAD	CHECKED	APPROVED	DIMNS: mm	SCALE: NTS	TITLE: NYLON SPACER 6mm
DATE 03.05.17	DATE	DATE	DRG. NUMBER: DPD 36 109 0 183	SIZE: A4	ISSUE: 1
KERALA STATE ELECTRONICS DEVELOPMENT CORPORATION LIMITED.				NO.OF SHEETS: 1 / 1	

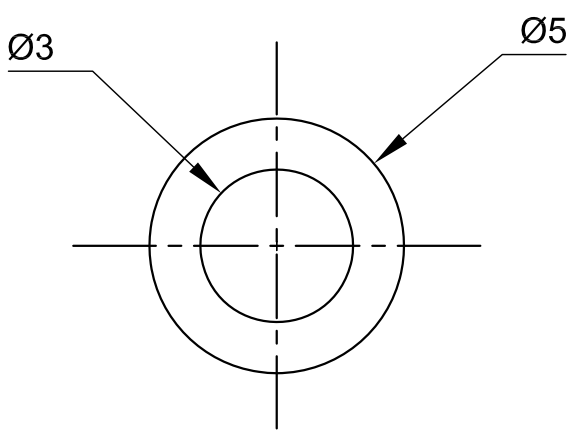

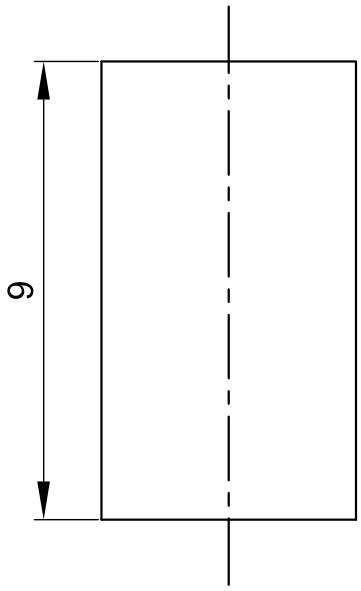

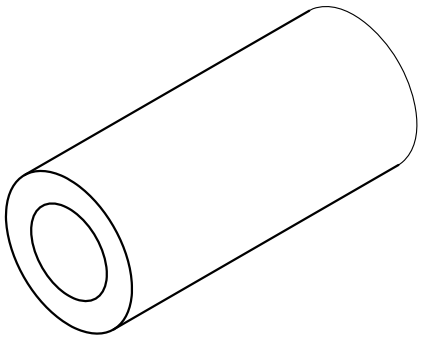

NOTE:
AVOID SHARP EDGES AND CORNERS

REV	CN.NO.	DATE	DESCRIPTION	CHECKED	APPROVED	NEXT ASSEMBLY	ITEM	QTY
4								
3								
2								
1								
0		03.05.17	ORIGINAL			DSA 36 109 0 103	28	4

MATERIAL	FINISH	PROJ.		PRJ.
NYLON	-		TOL.GEN. ± IS:2102 TOL.AXIS. ± (MED)	109

DRAWN	CHECKED	APPROVED	DIMNS	SCALE	TITLE
MALIKSAD			mm	NTS	NYLON SPACER 9mm
DATE 03.05.17	DATE	DATE			

KERALA STATE ELECTRONICS DEVELOPMENT CORPORATION LIMITED.

DRG. NUMBER: DPD 36 109 0 186

SIZE	ISSUE
A4	1
NO.OF SHEETS	1 / 1

RESTRICTED

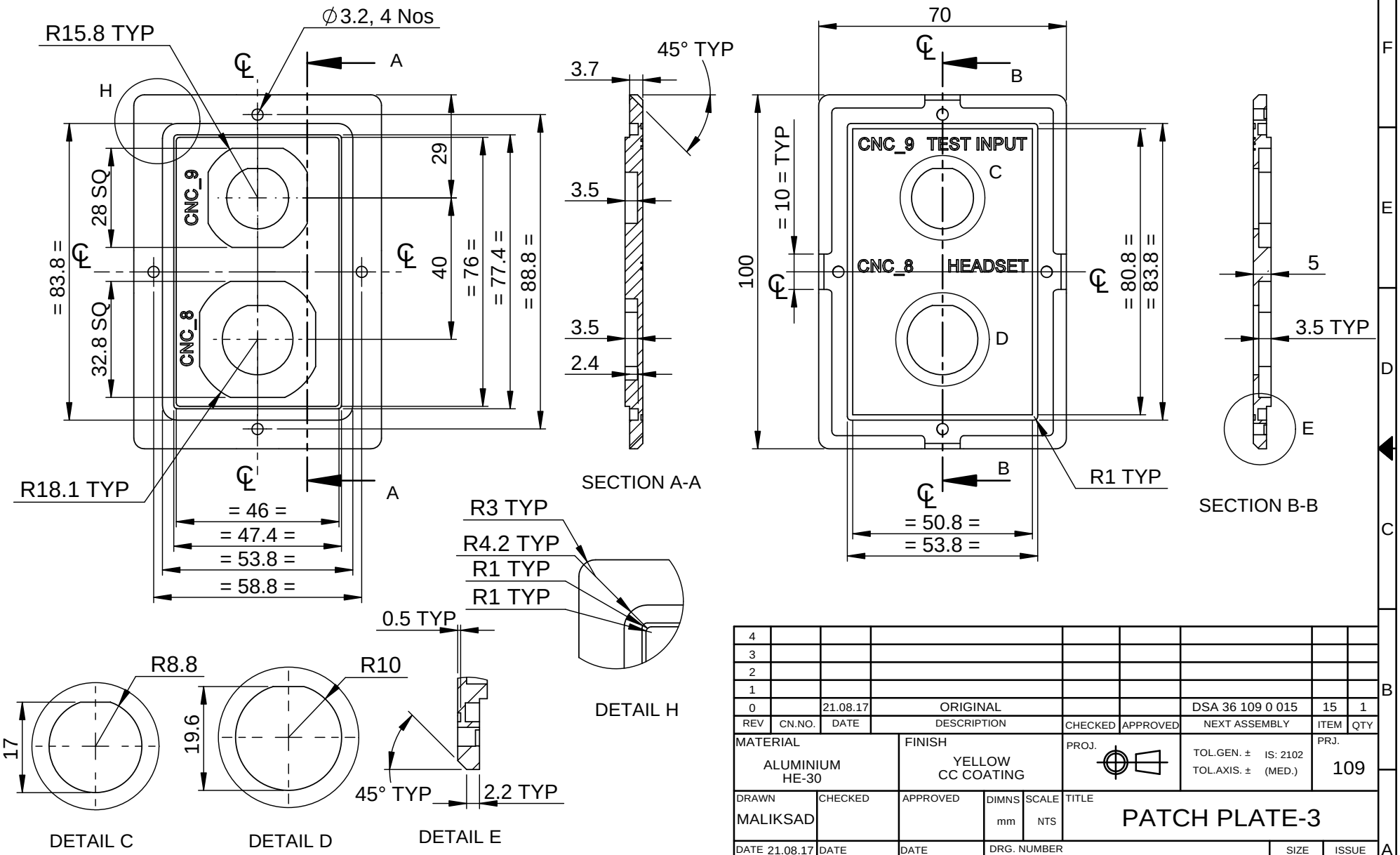

REV	CN.NO.	DATE	DESCRIPTION	CHECKED	APPROVED	NEXT ASSEMBLY	ITEM	QTY
4								
3								
2								
1								
0		21.08.17	ORIGINAL			DSA 36 109 0 015	15	1

MATERIAL: ALUMINIUM HE-30	FINISH: YELLOW CC COATING	PROJ.	TOL.GEN. ± IS: 2102 TOL.AXIS. ± (MED.)	PRJ. 109	
DRAWN: MALIKSAD	CHECKED	APPROVED	DIMNS: mm	SCALE: NTS	TITLE: PATCH PLATE-3
DATE: 21.08.17	DATE	DATE	DRG. NUMBER: DPD 36 109 0 063	SIZE: A4	ISSUE: 1
KERALA STATE ELECTRONICS DEVELOPMENT CORPORATION LIMITED				NO.OF SHEETS: 1 / 2	

RESTRICTED

RESTRICTED

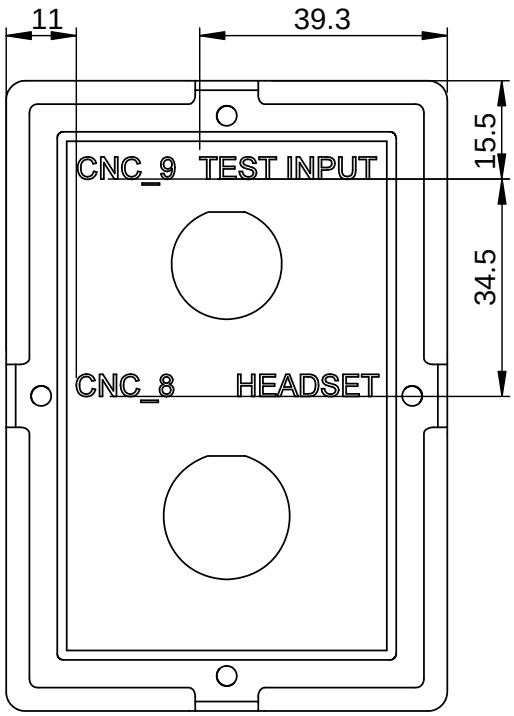

FRONT VIEW

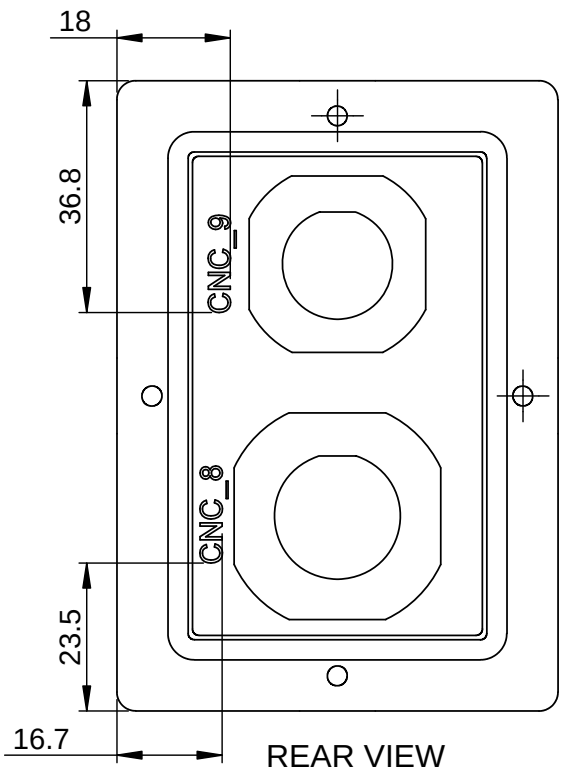

REAR VIEW

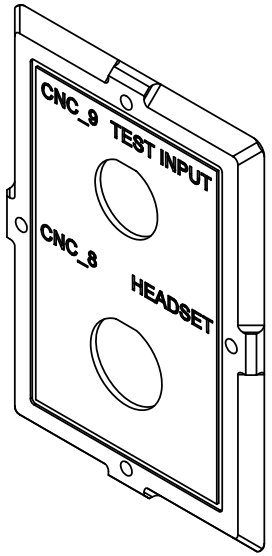

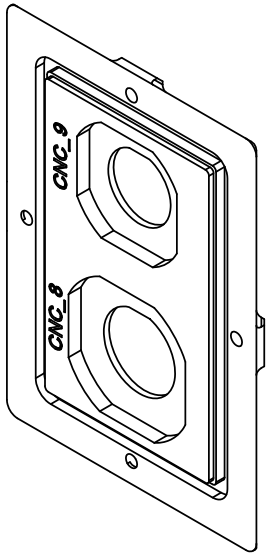

NOTE:

1. AVOID SHARP EDGES AND CORNERS
2. 3.5 mm HEIGHT TEXT TO BE ENGRAVED AND FILLED WITH BLACK PAINT

REV	CN.NO.	DATE	DESCRIPTION	CHECKED	APPROVED	NEXT ASSEMBLY	ITEM	QTY
4								
3								
2								
1								
0		28.08.17	ORIGINAL			DSA 36 109 0 015	15	1

MATERIAL	FINISH	PROJ.	TOL.GEN. ± IS: 2102 TOL.AXIS. ± (MED.)	PRJ.
ALUMINIUM HE-30	YELLOW CC COATING			109

DRAWN	CHECKED	APPROVED	DIMNS	SCALE	TITLE
MALIIKSAD			mm	NTS	PATCH PLATE-3
DATE 28.08.17	DATE	DATE	DRG. NUMBER		SIZE: A4 / ISSUE: 1
KERALA STATE ELECTRONICS DEVELOPMENT CORPORATION LIMITED			DPD 36 109 0 063		NO.OF SHEETS: 2 / 2

RESTRICTED

RESTRICTED

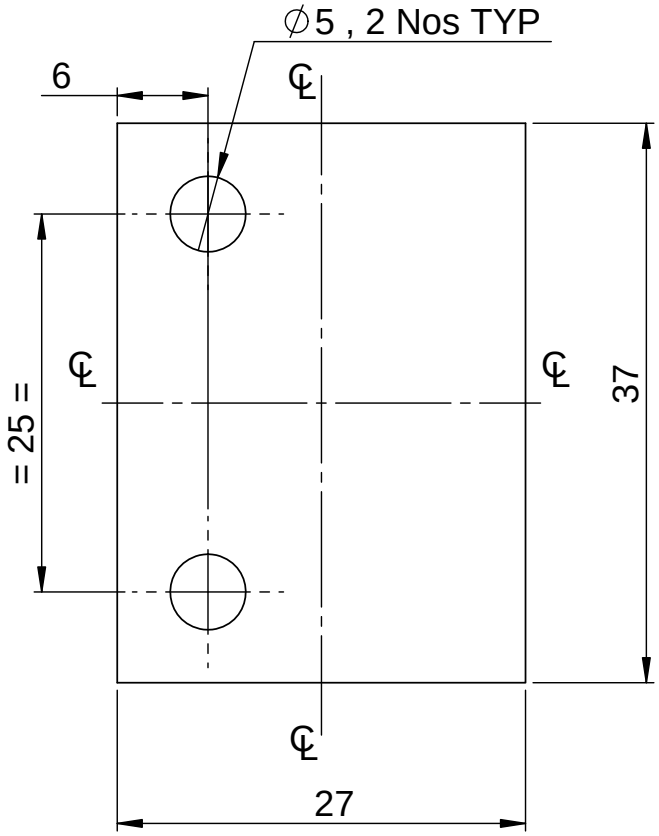

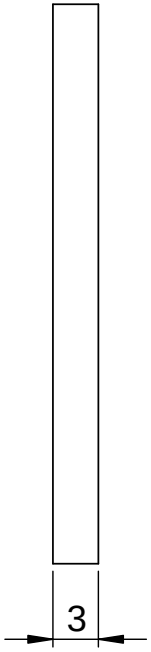

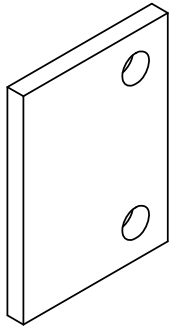

NOTE:

AVOID SHARP EDGES AND CORNERS

REV	CN.NO.	DATE	DESCRIPTION	CHECKED	APPROVED	NEXT ASSEMBLY	ITEM	QTY
4								
3								
2								
1								
0		29.09.17	ORIGINAL			DSA 36 109 0 015	5	3

MATERIAL	FINISH	PROJ.		PRJ.
ALUMINIUM H32-5052	YELLOW CC COATING		TOL.GEN. ± IS: 2102 TOL.AXIS. ± (MED.)	109

DRAWN	CHECKED	APPROVED	DIMNS	SCALE	TITLE
MALIKSAD			mm	NTS	PATCH PLATE FOR LATCH
DATE 29.09.17	DATE	DATE	DRG. NUMBER		SIZE: A4 · ISSUE: 1

KERALA STATE ELECTRONICS DEVELOPMENT CORPORATION LIMITED

DPD 36 109 0 058

NO.OF SHEETS: 1 / 1

RESTRICTED

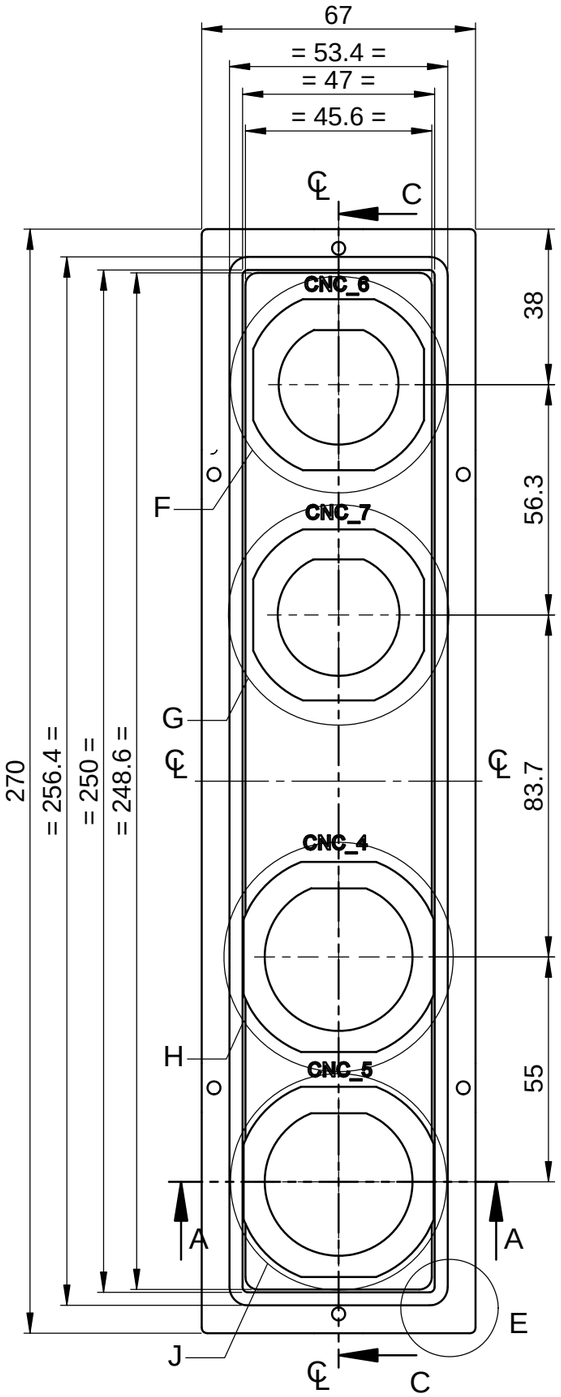

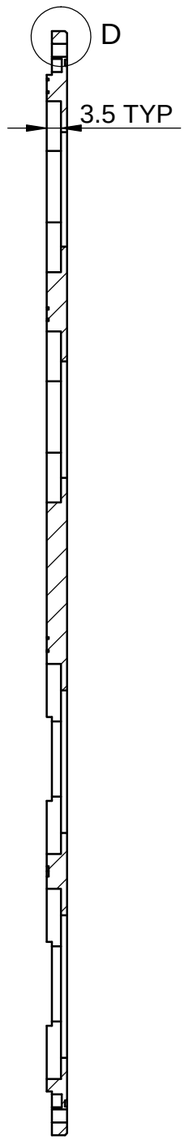

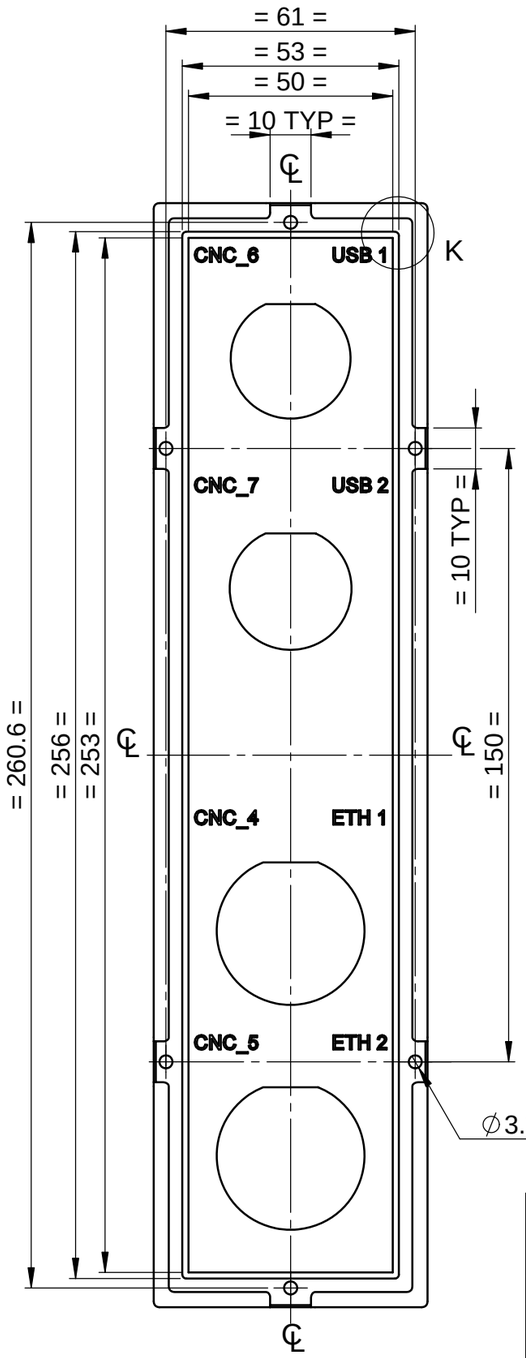

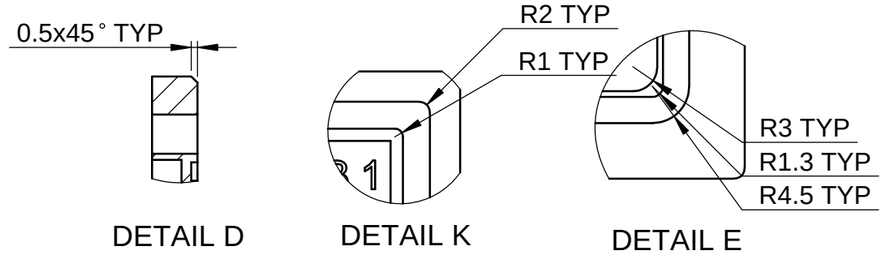

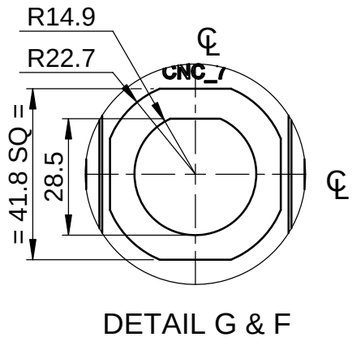

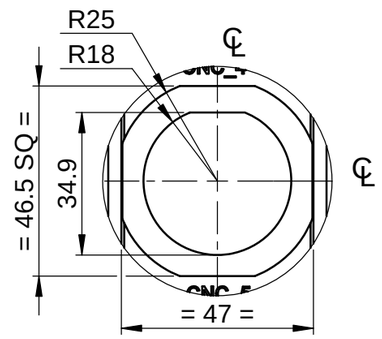

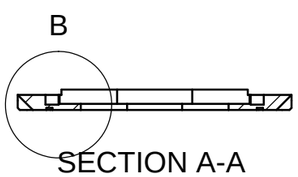

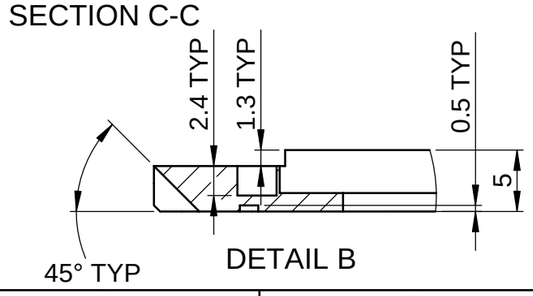

REV	CN.NO.	DATE	DESCRIPTION	CHECKED	APPROVED	NEXT ASSEMBLY	ITEM	QTY
4								
3								
2								
1								
0		21.08.17	ORIGINAL			DSA 36 109 0 019	15	1

MATERIAL	FINISH	PROJ.		PRJ.
ALUMINIUM HE-30	YELLOW CC COATING		TOL.GEN. ± IS:2102 TOL.AXIS. ± (MED)	109

DRAWN	CHECKED	APPROVED	DIMNS	SCALE	TITLE
MALIKSAD			mm	NTS	PATCH PLATE-1
DATE 21.08.17	DATE	DATE			

KERALA STATE ELECTRONICS DEVELOPMENT CORPORATION LIMITED

DRG. NUMBER: DPD 36 109 0 044

SIZE	ISSUE
A3	1
NO.OF SHEETS	1 / 2

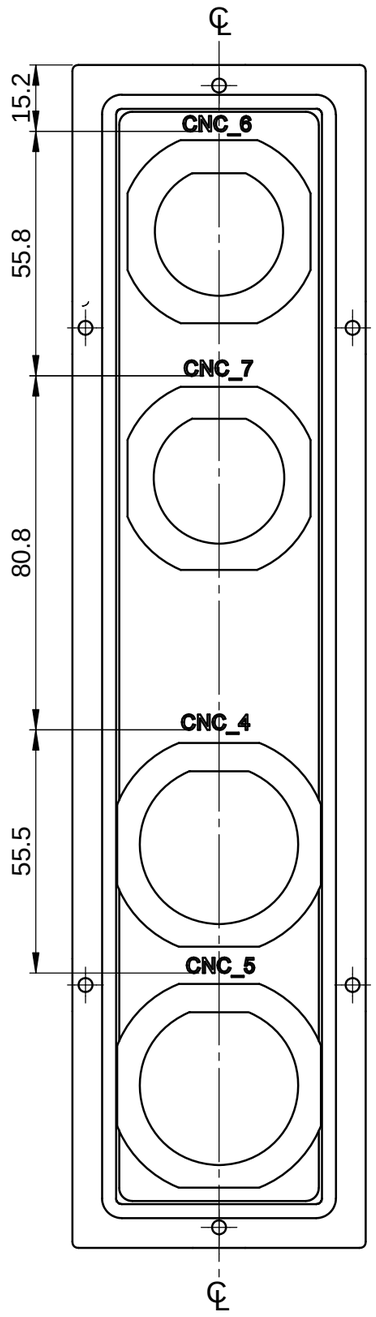

REAR VIEW

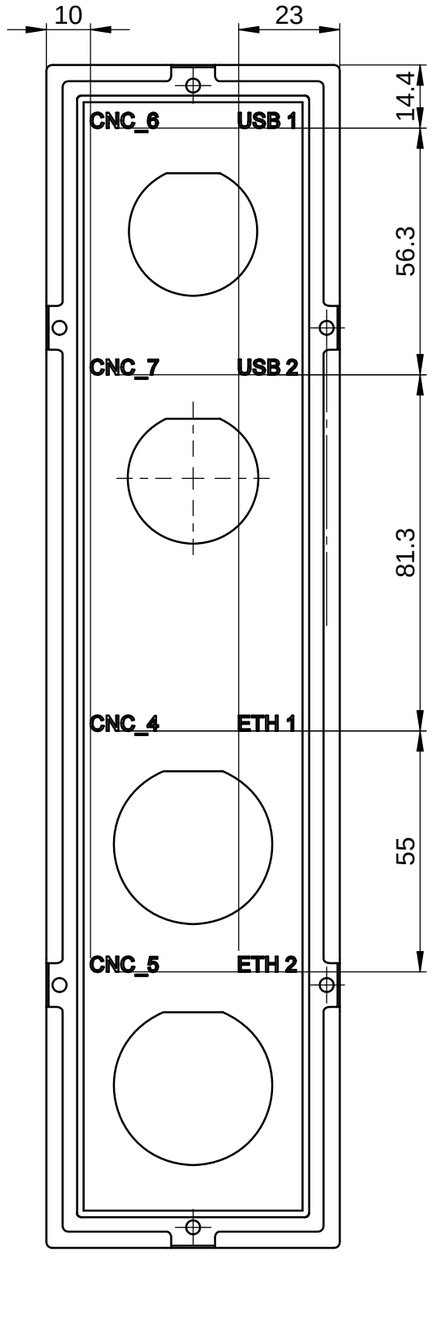

FRONT VIEW

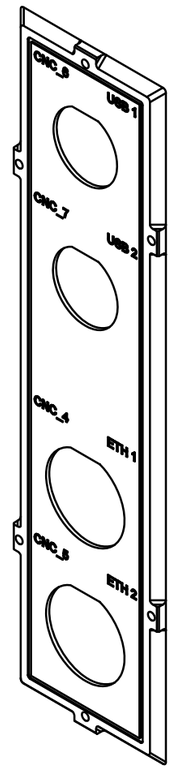

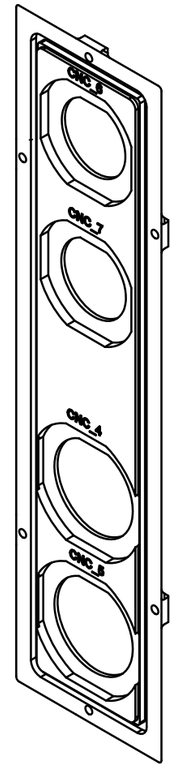

NOTE

1. AVOID SHARP CORNERS AND EDGES
2. 3.5mm HEIGHT TEXT TO BE ENGRAVED AND FILLED WITH BLACK PAINT
3. ON REAR SIDE ENGRAVING TEXT TO BE CENTRALISED TO THE CUTOUT

REV	CN.NO.	DATE	DESCRIPTION	CHECKED	APPROVED	NEXT ASSEMBLY	ITEM	QTY
4								
3								
2								
1								
0		19.08.17	ORIGINAL			DSA 36 109 0 019	15	1

MATERIAL: ALUMINIUM HE-30	FINISH: YELLOW CC COATING	PROJ.	TOL.GEN. ± IS:2102 TOL.AXIS. ± (MED)	PRJ. 109	
DRAWN: MALIKSAD	CHECKED	APPROVED	DIMNS: mm / SCALE: NTS	TITLE: PATCH PLATE-1	
DATE 19.08.17	DATE	DATE	DRG. NUMBER: DPD 36 109 0 044	SIZE: A3	ISSUE: 1
KERALA STATE ELECTRONICS DEVELOPMENT CORPORATION LIMITED.				NO.OF SHEETS: 2 / 2	

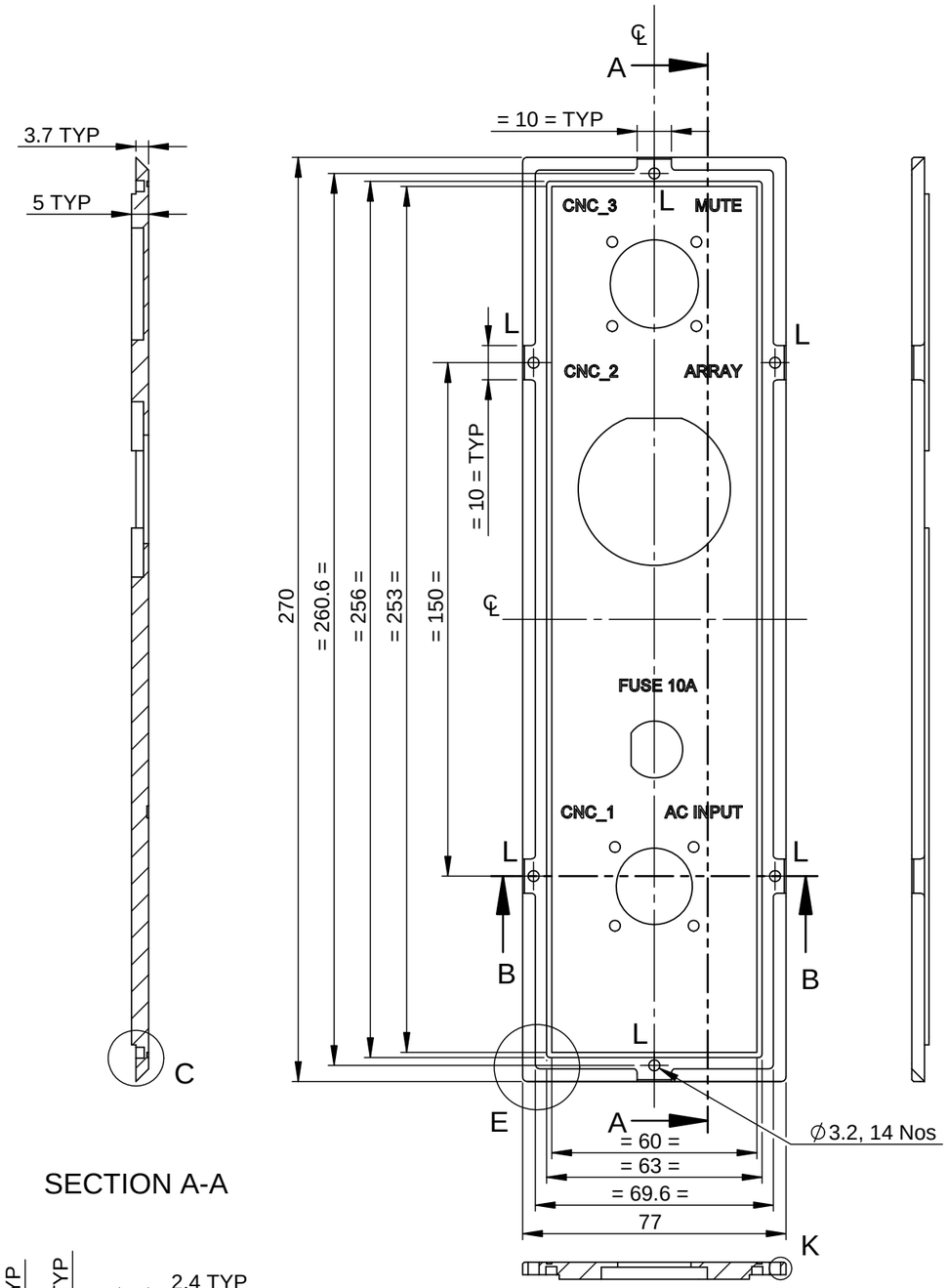

SECTION A-A

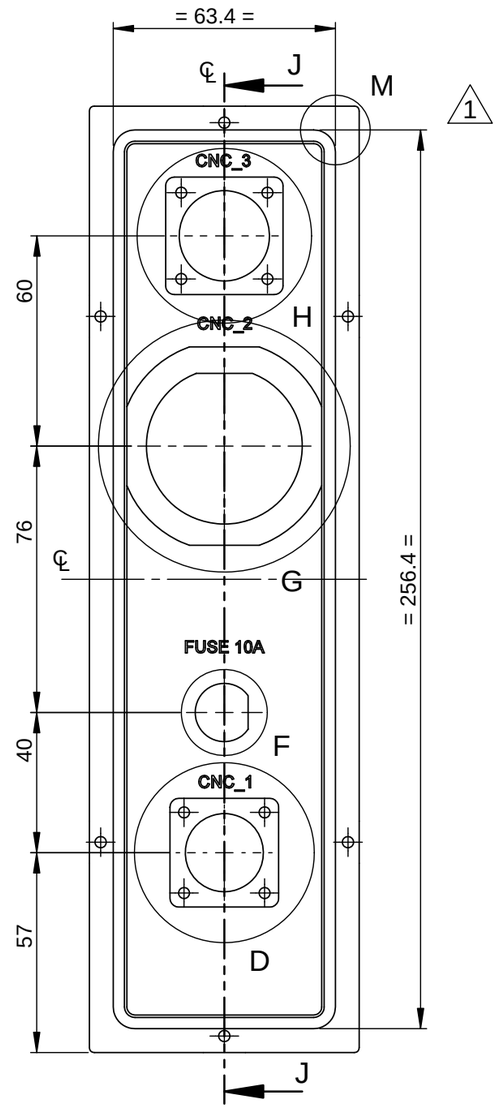

SECTION B-B

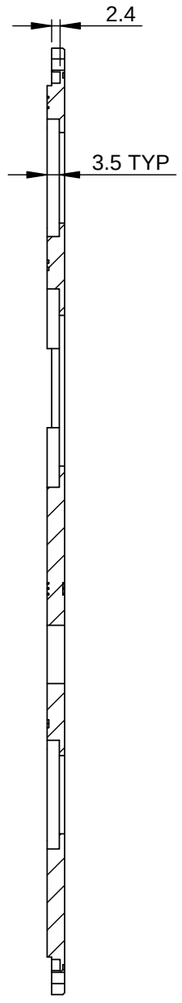

SECTION J-J

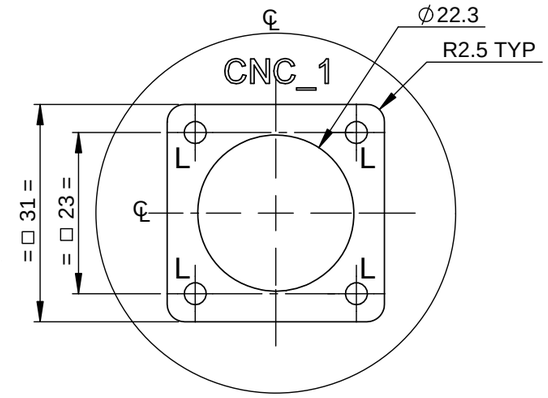

DETAIL D

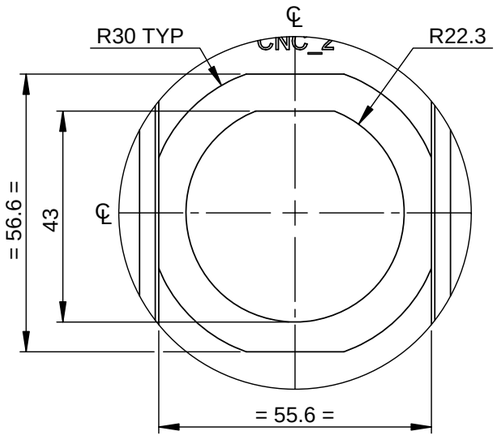

DETAIL G

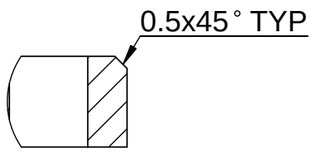

DETAIL K

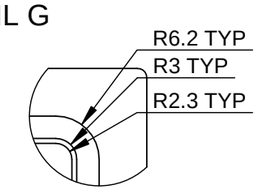

DETAIL M

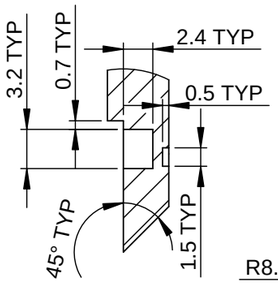

DETAIL C

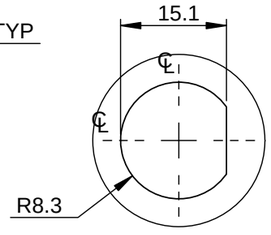

DETAIL F

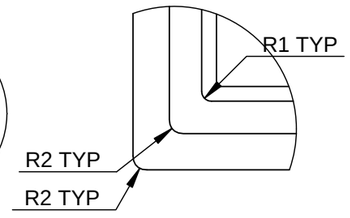

DETAIL E

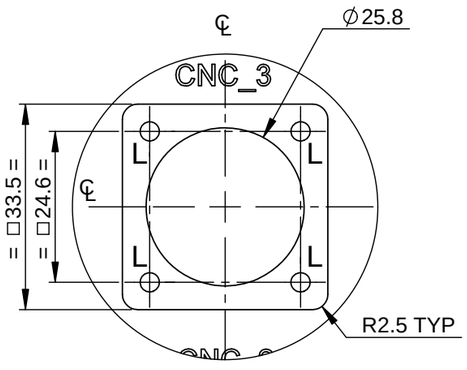

DETAIL H

REV	CN.NO.	DATE	DESCRIPTION	CHECKED	APPROVED	NEXT ASSEMBLY	ITEM	QTY
4								
3								
2								
1		22.08.19	REVISED					
0		15.11.16	ORIGINAL			DSA 36 109 0 019	04	01

MATERIAL: ALUMINIUM HE-30	FINISH: YELLOW CC COATING	PROJ.	TOL.GEN. ± IS:2102 TOL.AXIS. ± (MED)
PRJ. 109			

DRAWN	CHECKED	APPROVED	DIMNS	SCALE
MALIKSAD			mm	NTS
DATE 22.08.19	DATE	DATE		

TITLE: PATCH PLATE-2

KERALA STATE ELECTRONICS DEVELOPMENT CORPORATION LIMITED

DRG. NUMBER: DPD 36 109 0 042

SIZE	ISSUE
A3	1
NO.OF SHEETS	1 / 2

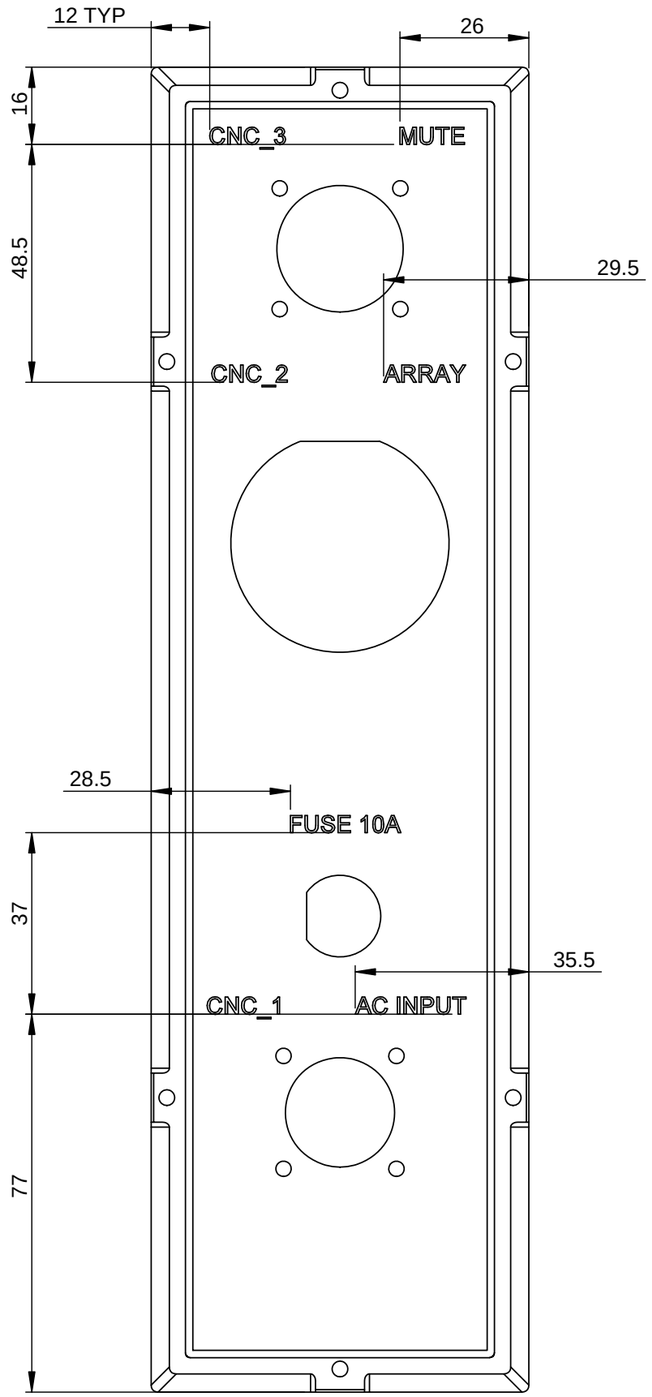

FRONT VIEW

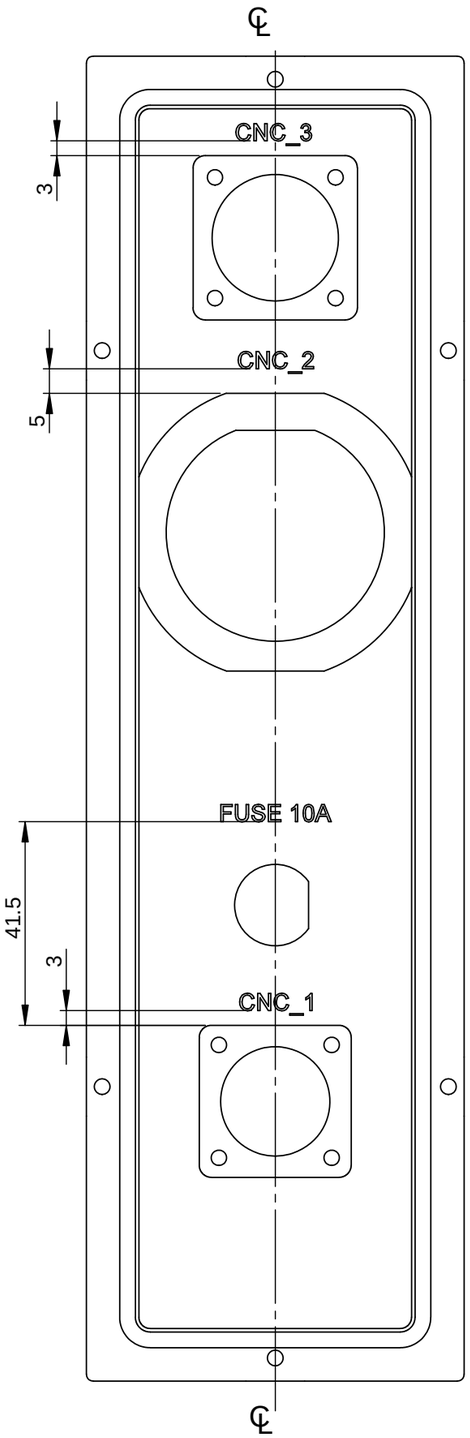

REAR VIEW

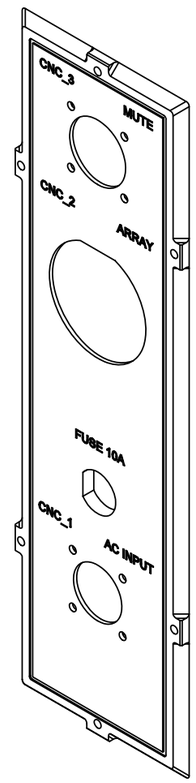

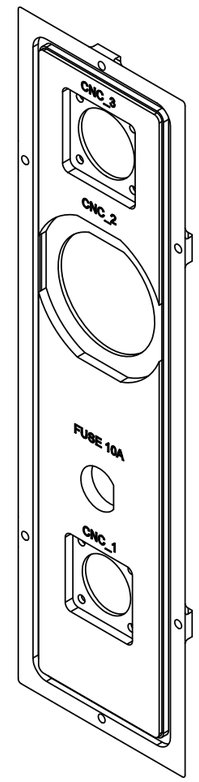

NOTE:

1. 3.5mm TEXT TO BE ENGRAVED AND FILLED WITH BLACK COLOUR
2. ON REAR SIDE ENGRAVING, TEXT TO BE CENTRALISED TO CUTOUT

REV	CN.NO.	DATE	DESCRIPTION	CHECKED	APPROVED	NEXT ASSEMBLY	ITEM	QTY
4								
3								
2								
1		22.08.19	REVISED					
0		15.11.16	ORIGINAL			DSA 36 109 0 019	04	01

MATERIAL: ALUMINIUM HE-30	FINISH: YELLOW CC COATING	PROJ.	TOL.GEN. ± IS:2102 TOL.AXIS. ± (MED)	PRJ. 109	
DRAWN: MALIKSAD	CHECKED	APPROVED	DIMNS: mm	SCALE: NTS	TITLE: PATCH PLATE-2
DATE: 22.08.19	DATE	DATE	DRG. NUMBER: DPD 36 109 0 042	SIZE: A3	ISSUE: 1
KERALA STATE ELECTRONICS DEVELOPMENT CORPORATION LIMITED.				NO.OF SHEETS: 2 / 2	

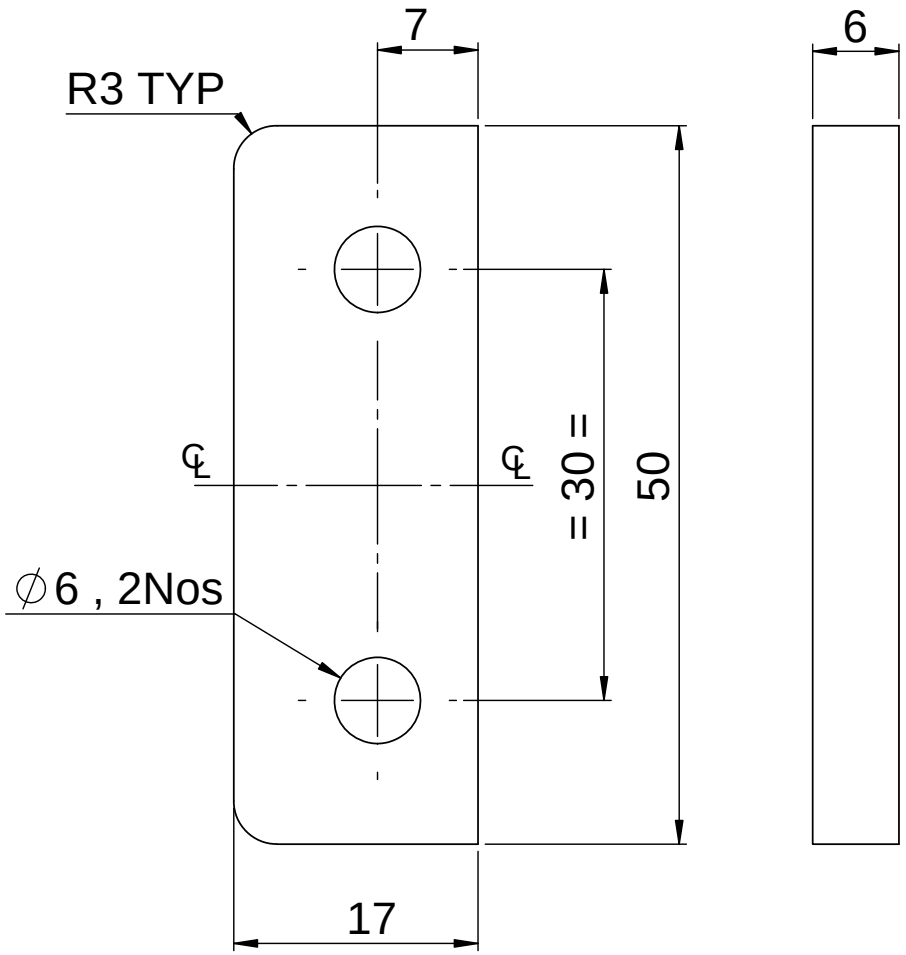

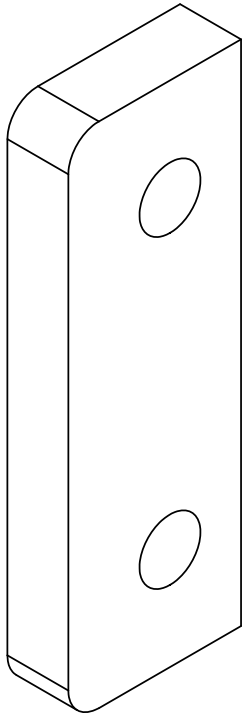

NOTE: AVOID SHARP CORNERS AND EDGES

REV	CN.NO.	DATE	DESCRIPTION	CHECKED	APPROVED	NEXT ASSEMBLY	ITEM	QTY
4								
3								
2								
1								
0		17.10.17	ORIGINAL			-	-	-

MATERIAL	FINISH	PROJ.	TOL.GEN. ± / TOL.AXIS. ±	PRJ.
ALUMINIUM HE30	YELLOW C.C COATING		IS: 2102 (MED.)	109

DRAWN	CHECKED	APPROVED	DIMNS	SCALE	TITLE
MANJULAL			mm	NTS	PATCH PLATE- HINGES
DATE 17.10.17	DATE	DATE	DRG. NUMBER		SIZE: A4 / ISSUE: 1
KERALA STATE ELECTRONICS DEVELOPMENT CORPORATION LIMITED			DPD 36 109 0 038		NO.OF SHEETS: 1 / 1

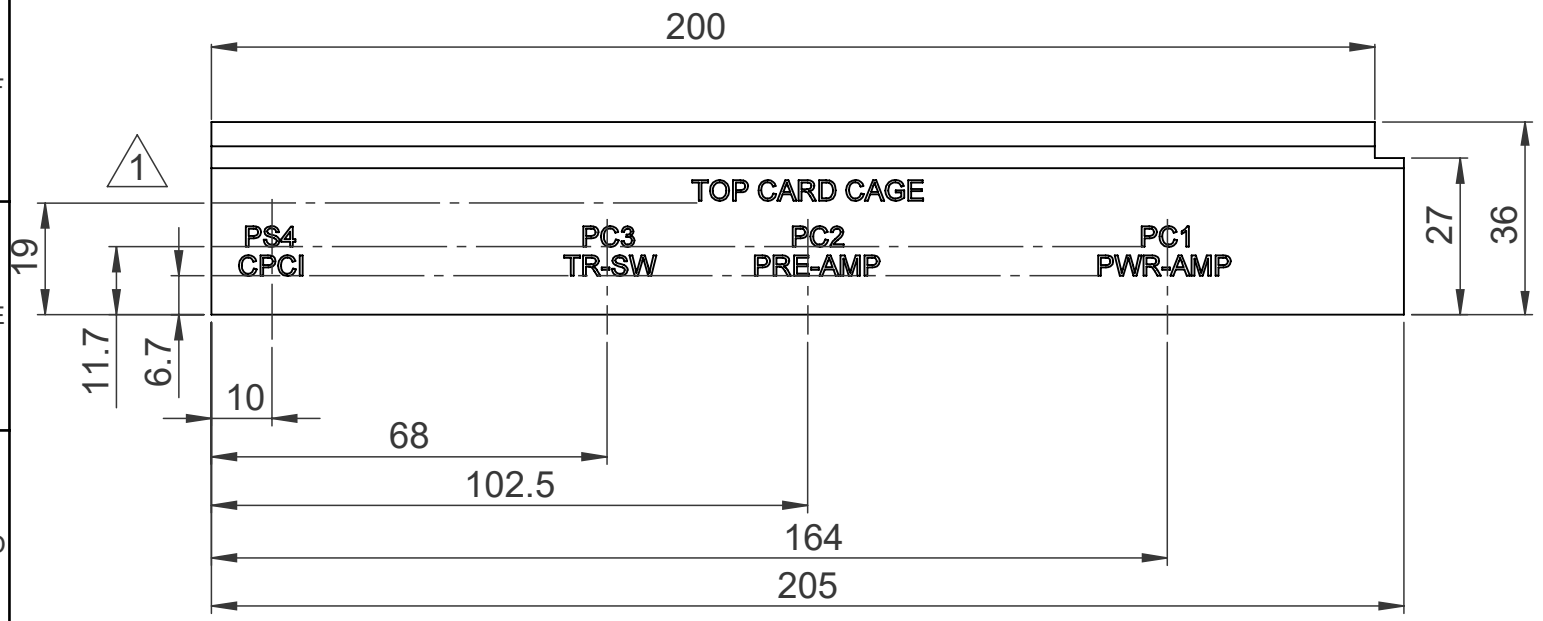

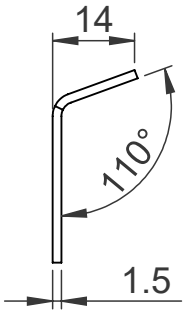

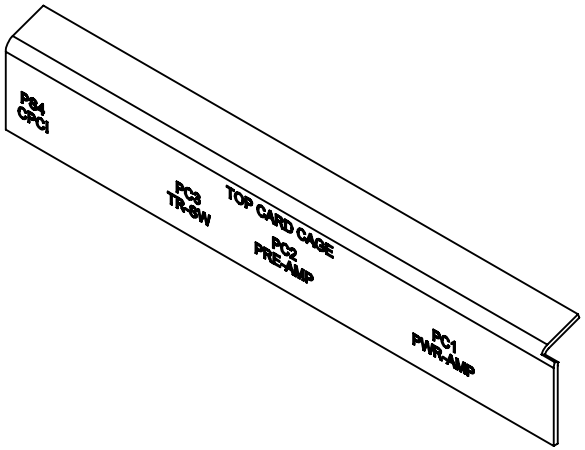

NOTE:

1. TEXT HEIGHT 3.5 TO BE ENGRAVED AFTER ANODISING AND CENTRALISED TO HORIZONTAL DIMENSION
2. AVOID SHARP CORNERS AND EDGES

1

REV	CN.NO.	DATE	DESCRIPTION	CHECKED	APPROVED	NEXT ASSEMBLY	ITEM	QTY
4								
3								
2								
1	357	06.05.23	REVISED					
0		17.10.17	ORIGINAL			-	-	-

MATERIAL: ALUMINIUM ALLOY 5052-H32	FINISH: 25 MICRON BLACK ANODISING	PROJ.	TOL.GEN. ± IS: 2102 TOL.AXIS. ± (MED.)	PRJ. 109	
DRAWN: MALIKSAD	CHECKED	APPROVED	DIMNS: mm / SCALE: NTS	TITLE: PCB SLOT NAME PLATE-2	
DATE 06.05.23	DATE	DATE	DRG. NUMBER: DPD 36 109 0 178	SIZE: A4	ISSUE: 1
KERALA STATE ELECTRONICS DEVELOPMENT CORPORATION LIMITED				NO.OF SHEETS: 1 / 1	

RESTRICTED

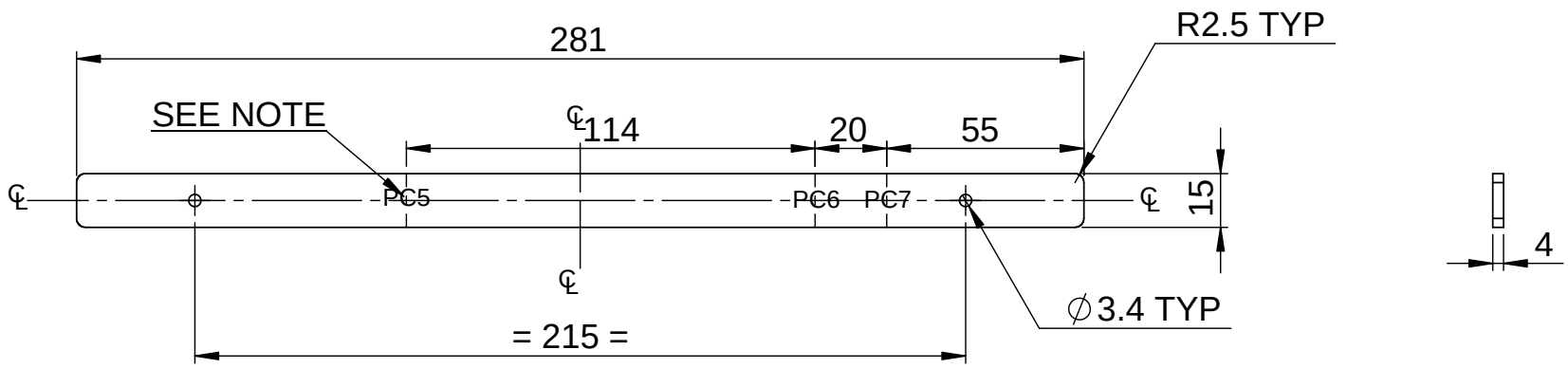

NOTE

AVOID SHARP EDGES AND CORNERS

5mm TEXT TO BE ENGRAVED AND CENTRALISED TO CORRESPONDING LINES

REV	CN.NO.	DATE	DESCRIPTION	CHECKED	APPROVED	NEXT ASSEMBLY	ITEM	QTY
4								
3								
2								
1								
0		09.11.16	ORIGINAL					

MATERIAL: 4mm ALUMINIUM SHEET	FINISH: 25 MICRON BLACK ANODISING	PROJ.	TOL.GEN. ± IS: 2102 TOL.AXIS. ± (MED.)	PRJ. 109	
DRAWN: MALIKSAD	CHECKED	APPROVED	DIMNS: mm / SCALE: NTS	TITLE: PCB SLOT NAME PLATE- 1	
DATE 09.11.16	DATE	DATE	DRG. NUMBER: DPD 36 109 0 071	SIZE: A4	ISSUE: 1
KERALA STATE ELECTRONICS DEVELOPMENT CORPORATION LIMITED				NO.OF SHEETS: 1 / 1	

RESTRICTED

RESTRICTED

RESTRICTED

DEVIATION FOR NON - TOLERANCED DIMENSIONS (IS : 2102 - MEDIUM)											
ABOVE	0.5	6	30	120	315	1000	LENGTH IN mm OF SHORTER SIDE OF ANGLE				
UP TO	6	30	120	315	1000	2000	ABOVE & UP TO	0.5 - 6	6 - 30	30 - 120	120 - 400
TOL.	±0.1	±0.2	±0.3	±0.5	±0.8	±1.2	TOL.	± 1°	± 30'	± 20'	± 10'

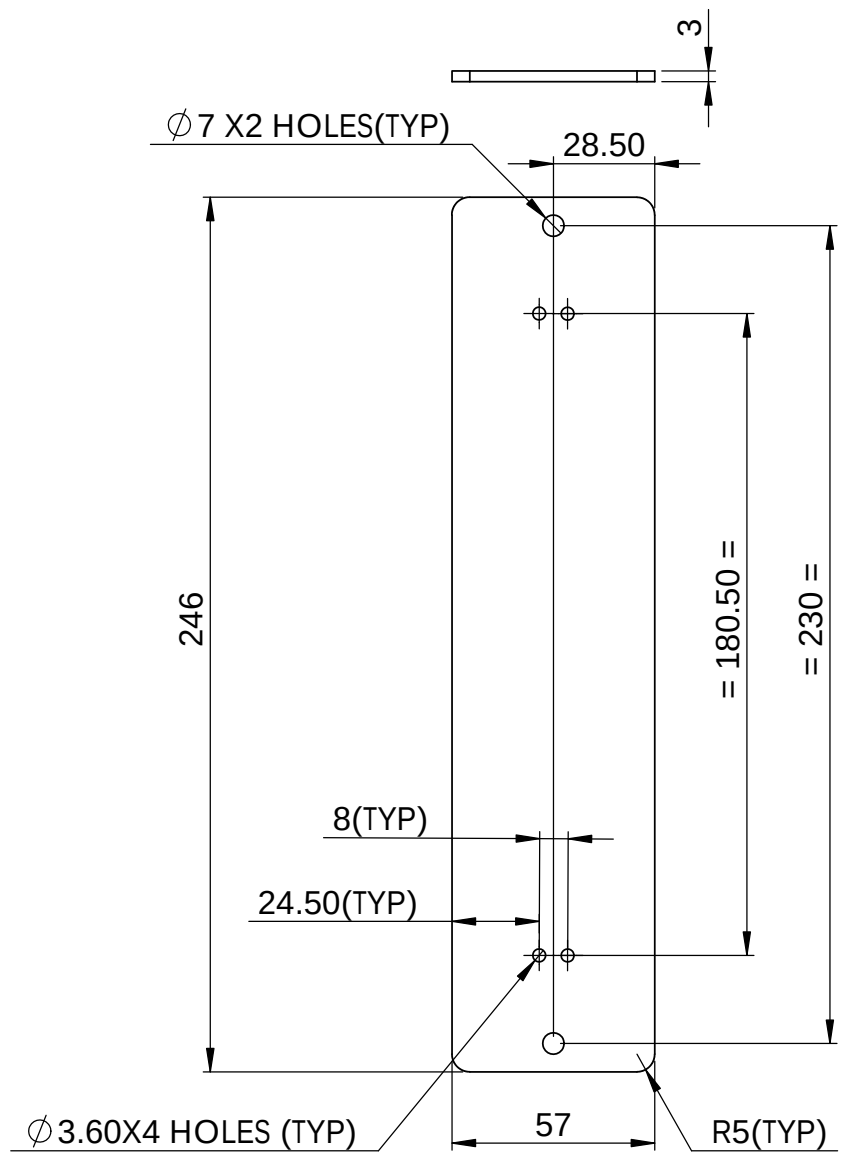

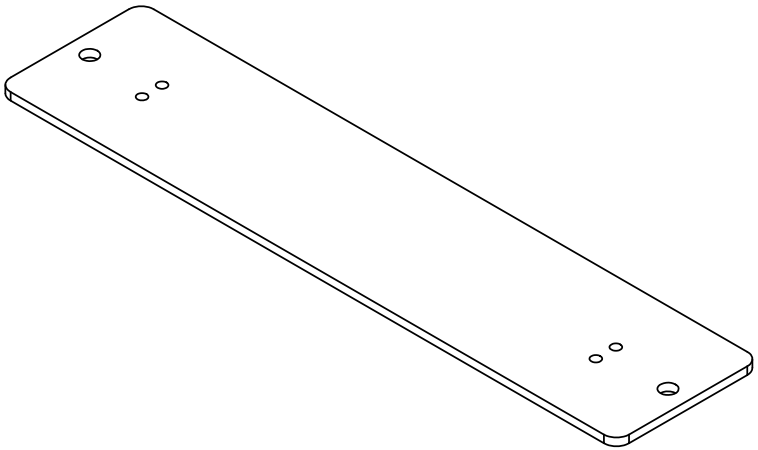

REV	CN.NO.	DATE	DESCRIPTION	CHECKED	APPROVED	NEXT ASSEMBLY	ITEM	QTY
4								
3								
2								
1								
0		19.05.16	ORIGINAL			DSA 36 094 0 026	13	1

MATERIAL	FINISH	PROJ.		PRJ.
ALUMINUIM	BLACK ANODIZING		TOL.GEN. ± IS: 2102 TOL.AXIS. ± (MED.)	094

DRAWN	CHECKED		DIMNS	SCALE	TITLE
MALIKSAD			mm	NTS	PIRI CONNECTOR SUPPORTING PLATE
DATE 19.05.16	MECHANICAL	ELECTRICAL	DRG. NUMBER		SIZE / ISSUE
KERALA STATE ELECTRONICS DEVELOPMENT CORPORATION LIMITED			DPD 36 094 0 602		A4 / 1
					NO.OF SHEETS 1 / 1

RESTRICTED

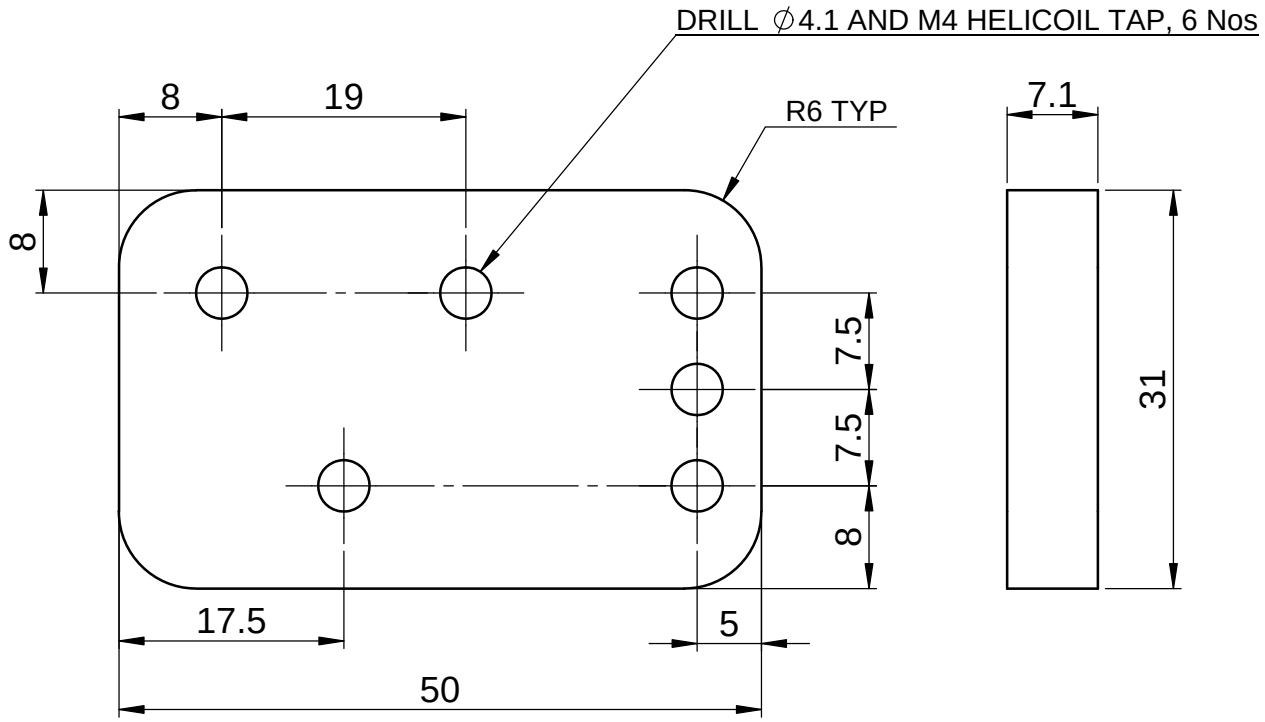

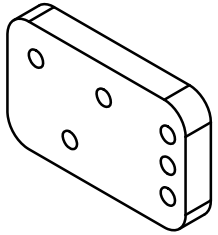

NOTE

1. AVOID SHARP CORNERS AND EDGES
2. BURRS MUST BE REMOVED

REV	CN.NO.	DATE	DESCRIPTION	CHECKED	APPROVED	NEXT ASSEMBLY	ITEM	QTY
4								
3								
2								
1								
0		19.08.17	ORIGINAL			DSA 36 109 0 020	9	7

MATERIAL: ALUMINIUM HE-30	FINISH: YELLOW CC COATING	PROJ.	TOL.GEN. ± IS: 2102 TOL.AXIS. ± (MED.)	PRJ. 109	
DRAWN: MALIKSAD	CHECKED	APPROVED	DIMNS: mm / SCALE: NTS	TITLE: PLATE CONNECTING PART 1	
DATE 19.08.17	DATE	DATE	DRG. NUMBER: DPD 36 109 0 095	SIZE: A4	ISSUE: 1
KERALA STATE ELECTRONICS DEVELOPMENT CORPORATION LIMITED				NO.OF SHEETS: 1 / 1	

RESTRICTED

RESTRICTED

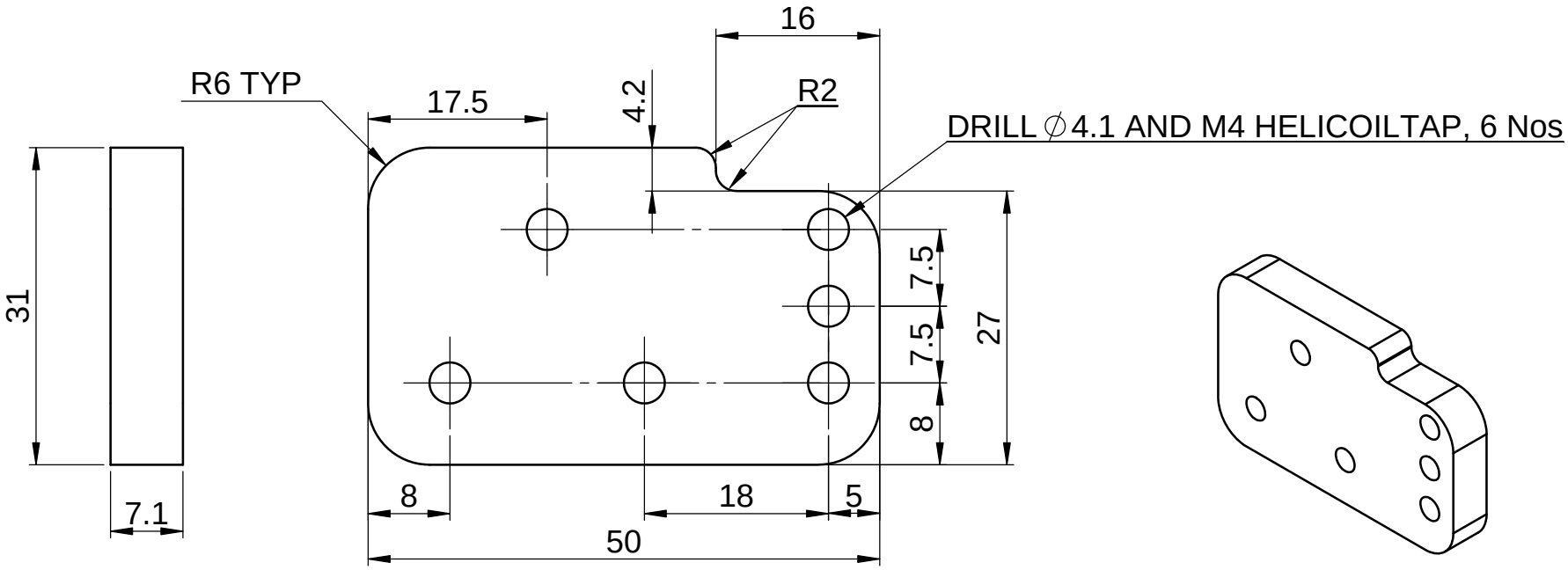

NOTE

1. AVOID SHARP CORNERS AND EDGES
2. BURRS MUST BE REMOVED

REV	CN.NO.	DATE	DESCRIPTION	CHECKED	APPROVED	NEXT ASSEMBLY	ITEM	QTY
4								
3								
2								
1								
0		18.09.17	ORIGINAL			DSA 36 109 0 020	17	1

MATERIAL	FINISH	PROJ.		PRJ.
ALUMINIUM HE-30	YELLOW CC COATING		TOL.GEN. ± IS: 2102 TOL.AXIS. ± (MED.)	109

DRAWN	CHECKED	APPROVED	DIMNS	SCALE	TITLE
MALIKSAD			mm	NTS	PLATE CONNECTING PART 2
DATE 18.09.17	DATE	DATE	DRG. NUMBER		SIZE: A4 / ISSUE: 1
KERALA STATE ELECTRONICS DEVELOPMENT CORPORATION LIMITED			DPD 36 109 0 103		NO.OF SHEETS: 1 / 1

RESTRICTED

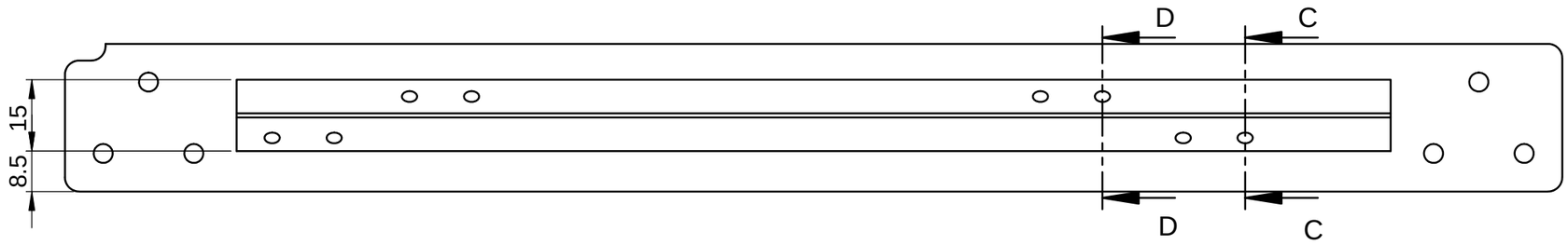

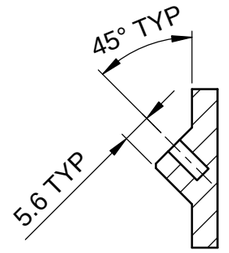

SECTION D-D

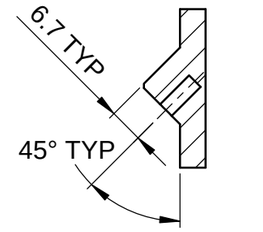

SECTION C-C

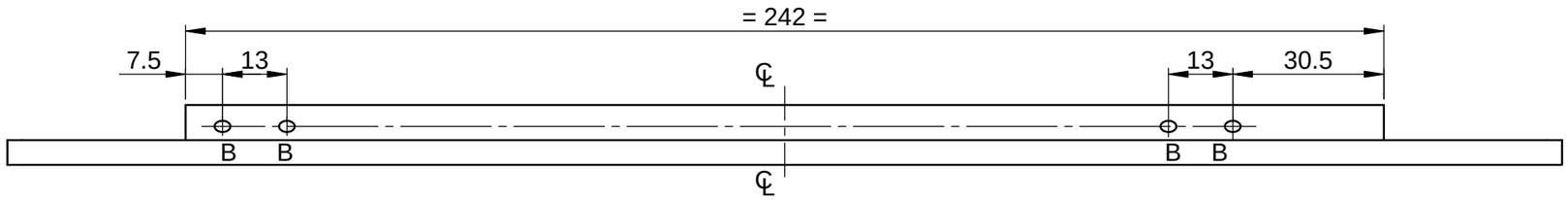

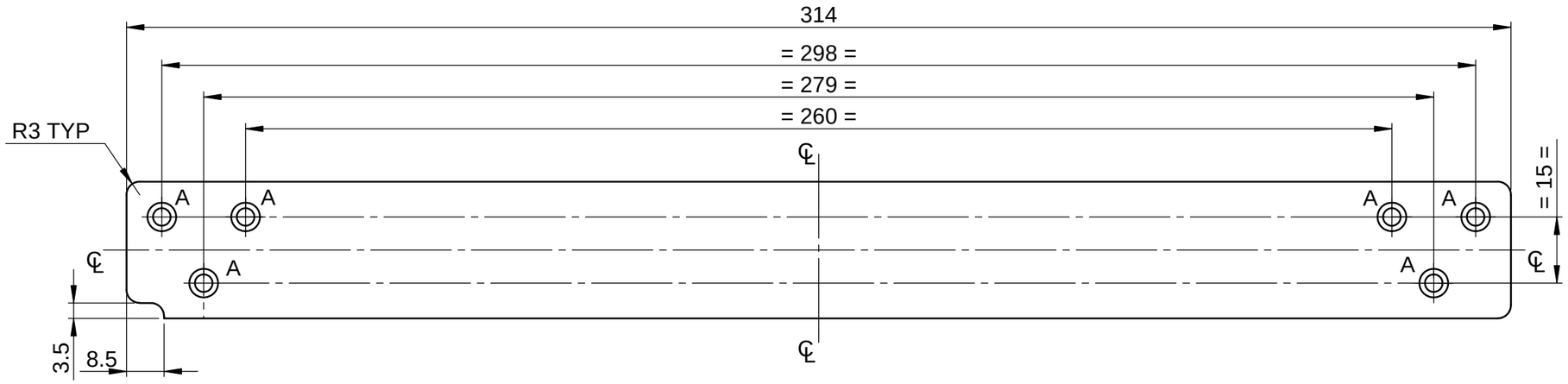

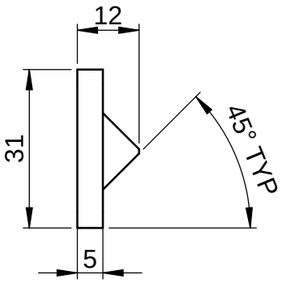

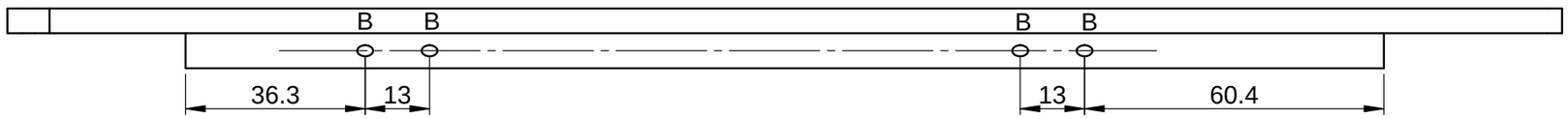

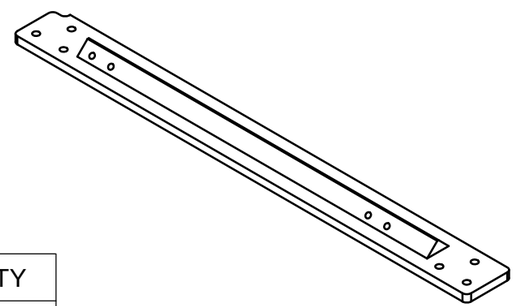

NOTE

1. AVOID SHARP CORNERS AND EDGES
2. ALL BURRS MUST BE REMOVED

SL NO	REF	DESCRIPTION	QTY
1	A	⌀4.2 ⌵ ⌀8.4	6
2	B	DRILL ⌀3.1, ↧ 6 AND M3 HELICOIL TAP	8

REV	CN.NO.	DATE	DESCRIPTION	CHECKED	APPROVED	NEXT ASSEMBLY	ITEM	QTY
4								
3								
2								
1								
0		19.08.17	ORIGINAL			DSA 36 109 0 020	15	1

MATERIAL	FINISH	PROJ.		PRJ.
ALUMINIUM HE-30	YELLOW CC COATING		TOL.GEN. ± IS:2102 TOL.AXIS. ± (MED)	109

DRAWN	CHECKED	APPROVED	DIMNS	SCALE	TITLE
MALIKSAD			mm	NTS	PLATE-01
DATE 19.08.17	DATE	DATE			

KERALA STATE ELECTRONICS DEVELOPMENT CORPORATION LIMITED

DRG. NUMBER: DPD 36 109 0 101

SIZE	ISSUE
A3	1
NO.OF SHEETS	1 / 1

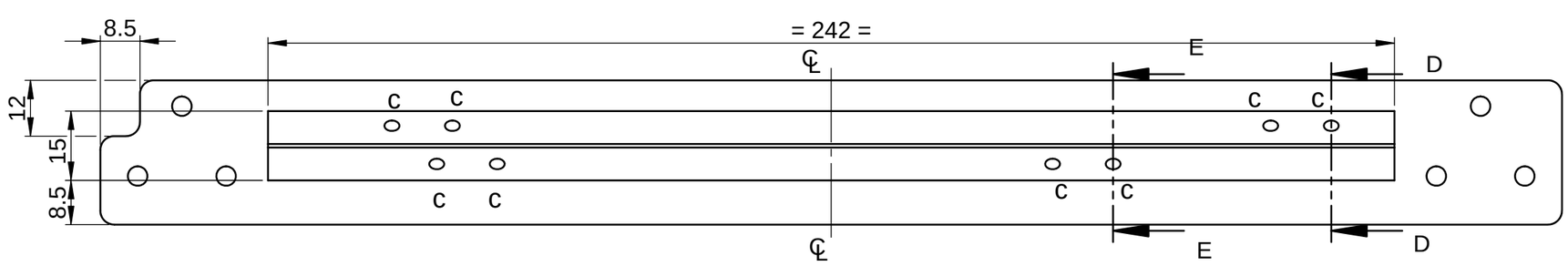

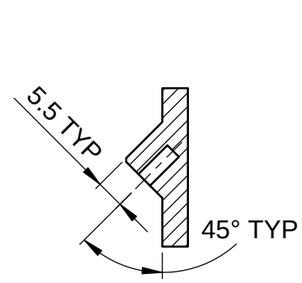

SECTION E-E

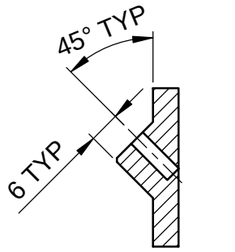

SECTION D-D

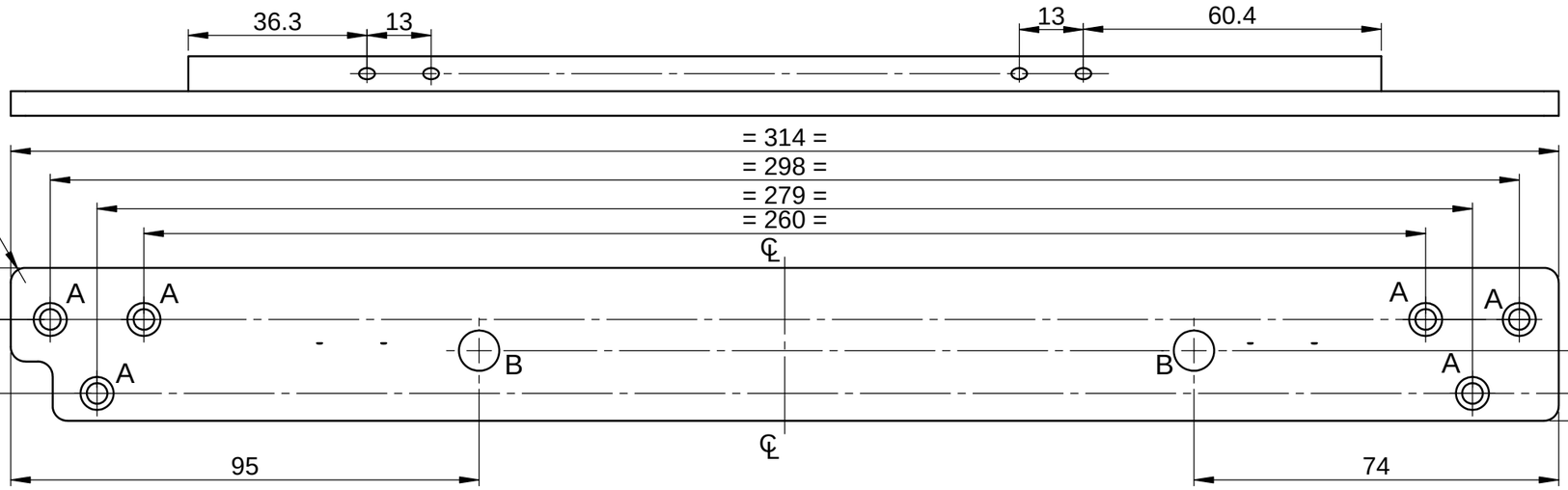

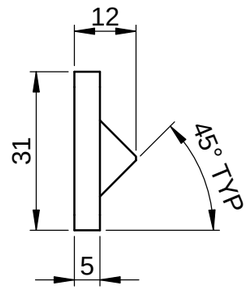

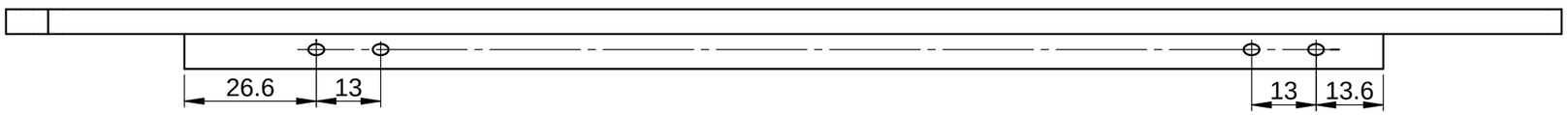

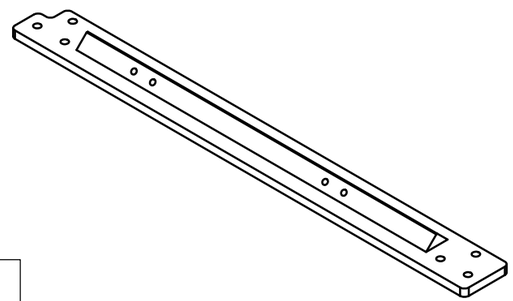

NOTE

1. AVOID SHARP CORNERS AND EDGES
2. ALL BURRS MUST BE REMOVED

SL NO	REF	DESCRIPTION	QTY
1	A	∅4.2 ⌵ ∅8.4	6
2	B	DRILL ∅8.2, ↧7 AND M8 HELICOIL TAP	2
3	C	DRILL ∅3.1, ↧6 AND M3 HELICOIL TAP	8

REV	CN.NO.	DATE	DESCRIPTION	CHECKED	APPROVED	NEXT ASSEMBLY	ITEM	QTY
4								
3								
2								
1								
0		19.08.17	ORIGINAL			DSA 36 109 0 020	18	1

MATERIAL: ALUMINIUM HE -30	FINISH: YELLOW CC COATING	PROJ.	TOL.GEN. ± IS:2102 TOL.AXIS. ± (MED)	PRJ. 109	
DRAWN: MALIKSAD	CHECKED	APPROVED	DIMNS: mm	SCALE: NTS	TITLE: PLATE-02
DATE 19.08.17	DATE	DATE			

KERALA STATE ELECTRONICS DEVELOPMENT CORPORATION LIMITED

DRG. NUMBER: DPD 36 109 0 104

SIZE	ISSUE
A3	1
NO.OF SHEETS	1 / 1

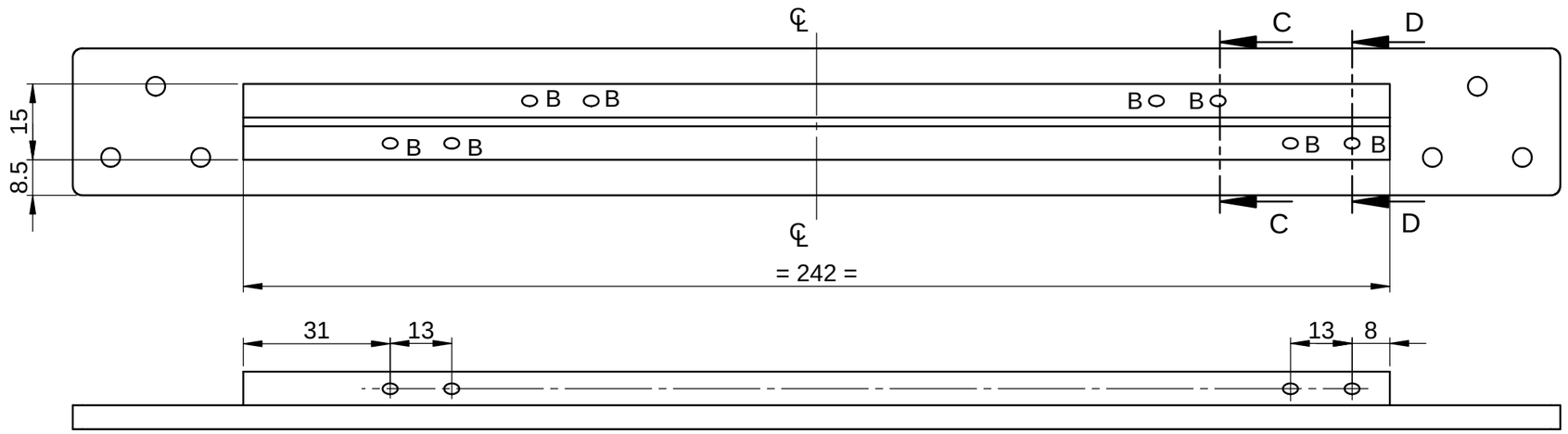

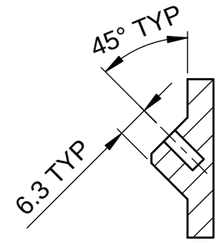

SECTION C-C

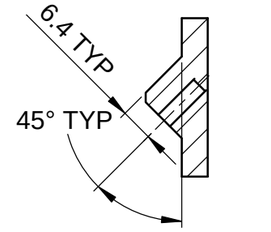

SECTION D-D

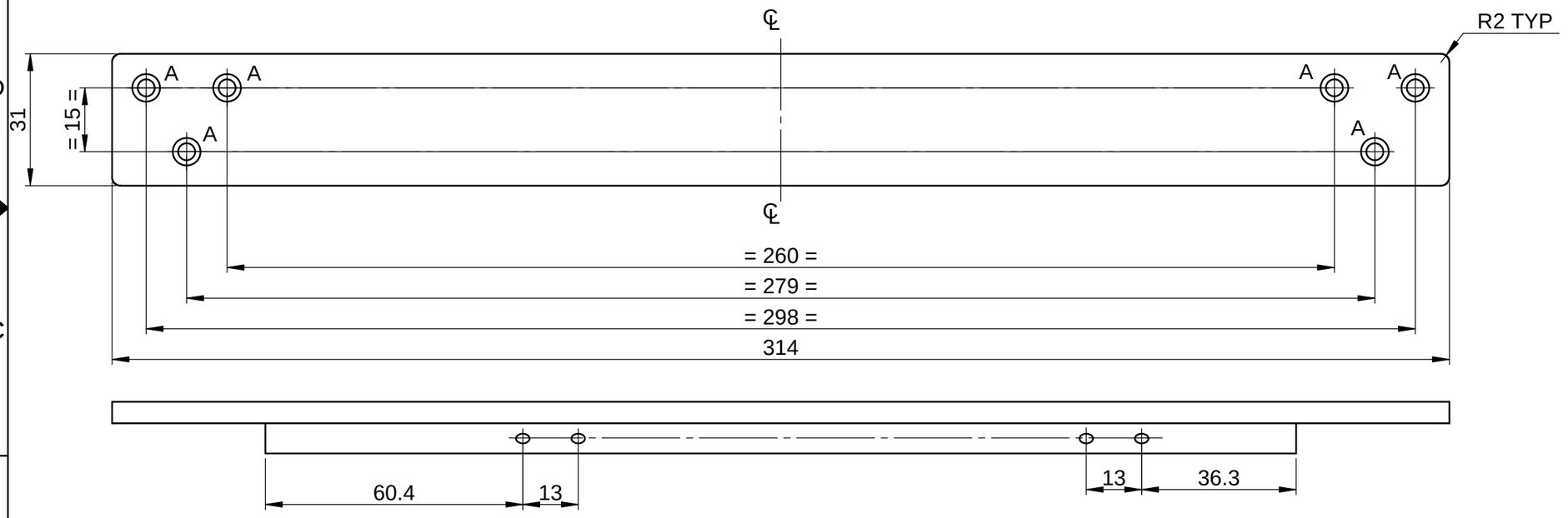

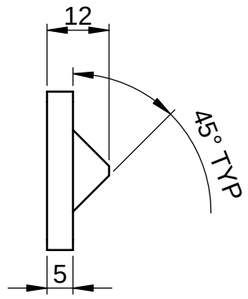

NOTE

1. AVOID SHARP CORNERS AND EDGES
2. ALL BURRS MUST BE REMOVED

SL NO	REF	DESCRIPTION	QTY
1	A	∅4.2 ⌵ ∅8.4	6
2	B	DRILL ∅3.1, ↧ 6 AND M3 HELICOIL TAP	8

REV	CN.NO.	DATE	DESCRIPTION	CHECKED	APPROVED	NEXT ASSEMBLY	ITEM	QTY
4								
3								
2								
1								
0		19.08.17	ORIGINAL			DSA 36 109 0 020	10	1

MATERIAL	FINISH	PROJ.		PRJ.
ALUMINIUM HE-30	YELLOW CC COATING		TOL.GEN. ± IS:2102 TOL.AXIS. ± (MED)	109

DRAWN	CHECKED	APPROVED	DIMNS	SCALE	TITLE
MALIKSAD			mm	NTS	PLATE-03
DATE 19.08.17	DATE	DATE			

KERALA STATE ELECTRONICS DEVELOPMENT CORPORATION LIMITED

DRG. NUMBER: DPD 36 109 0 096

SIZE	ISSUE
A3	1
NO.OF SHEETS	1 / 1

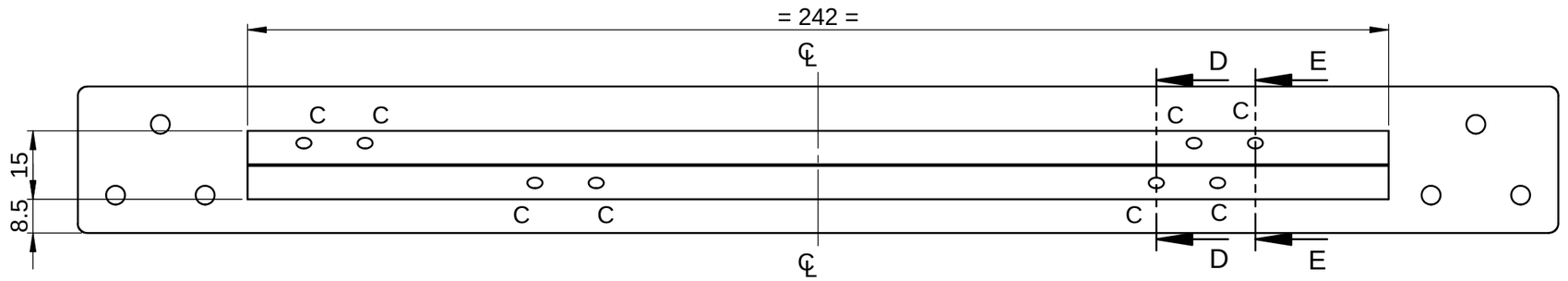

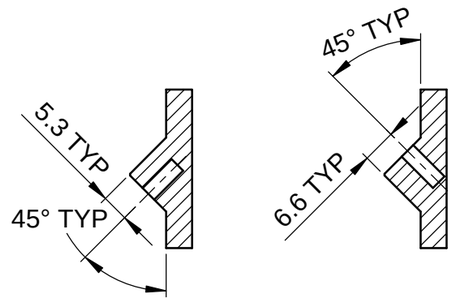

SECTION D-D SECTION E-E

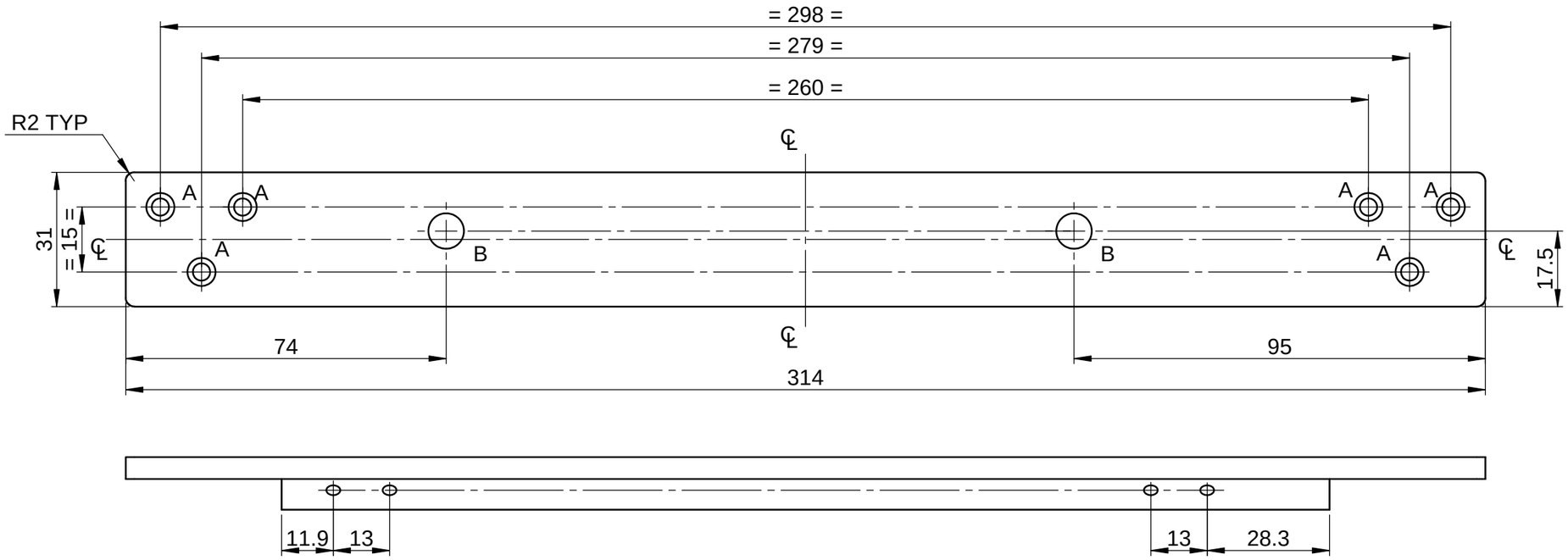

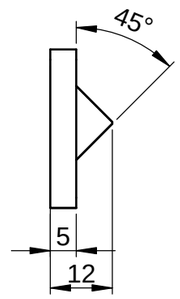

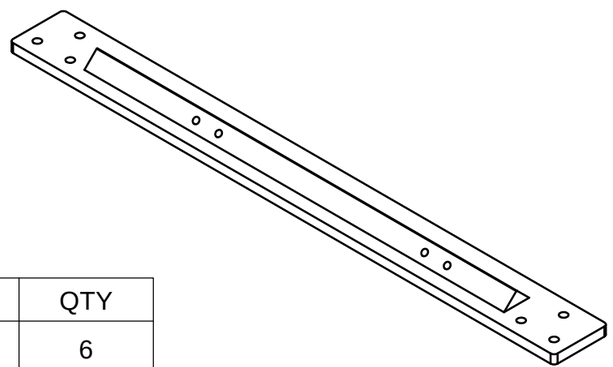

NOTE

1. AVOID SHARP CORNERS AND EDGES
2. ALL BURRS MUST BE REMOVED

SL NO	REF	DESCRIPTION	QTY
1	A	⌀4.2 ⌵ ⌀8.4	6
2	B	DRILL ⌀8.2, ↧7 AND M8 HELICOIL TAP	2
3	C	DRILL ⌀3.1, ↧6 AND M3 HELICOIL TAP	4

REV	CN.NO.	DATE	DESCRIPTION	CHECKED	APPROVED	NEXT ASSEMBLY	ITEM	QTY
4								
3								
2								
1								
0		19.08.17	ORIGINAL			DSA 36 109 0 020	10	1

MATERIAL: ALUMINIUM HE-30	FINISH: YELLOW CC COATING	PROJ.	TOL.GEN. ± IS:2102 TOL.AXIS. ± (MED)	PRJ. 109	
DRAWN: MALIKSAD	CHECKED	APPROVED	DIMNS: mm	SCALE: NTS	TITLE: PLATE-04
DATE 19.08.17	DATE	DATE			

KERALA STATE ELECTRONICS DEVELOPMENT CORPORATION LIMITED.

DRG. NUMBER: DPD 36 109 0 094

SIZE	ISSUE
A3	1
NO.OF SHEETS	1 / 1

RESTRICTED

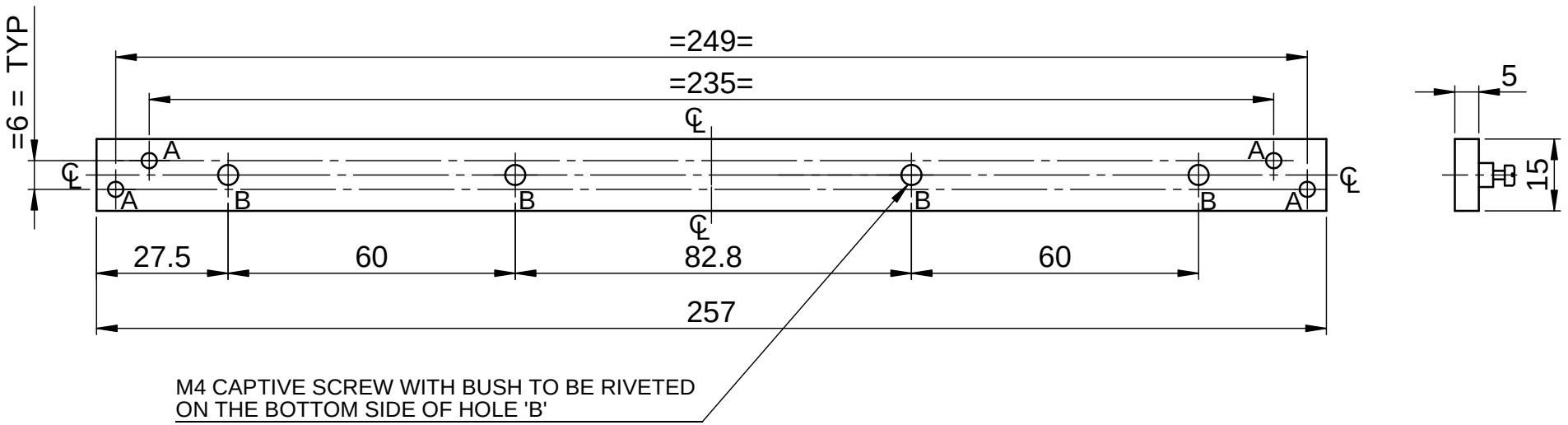

NOTE

1. AVOID SHARP CORNERS AND EDGES
2. BURRS MUST BE REMOVED

SL NO	REF	DESCRIPTION	QTY
1	A	∅3.2	4
2	B	M4x15 CAPTIVE SCREW WITH BUSH	4

REV	CN.NO.	DATE	DESCRIPTION	CHECKED	APPROVED	NEXT ASSEMBLY	ITEM	QTY
4								
3								
2								
1								
0		11.10.17	ORIGINAL			DSA 36 109 0 021	11	2

MATERIAL: ALUMINIUM HE-30	FINISH: YELLOW CC COATING	PROJ.	TOL.GEN. ± IS: 2102 TOL.AXIS. ± (MED.)	PRJ. 109	
DRAWN: MALIKSAD	CHECKED	APPROVED	DIMNS: mm / SCALE: NTS	TITLE: PSU PLATE SUPPORT BAR	
DATE 11.10.17	DATE	DATE	DRG. NUMBER: DPD 36 109 0 051	SIZE: A4	ISSUE: 1
KERALA STATE ELECTRONICS DEVELOPMENT CORPORATION LIMITED				NO.OF SHEETS: 1 / 1	

RESTRICTED

RESTRICTED

RESTRICTED

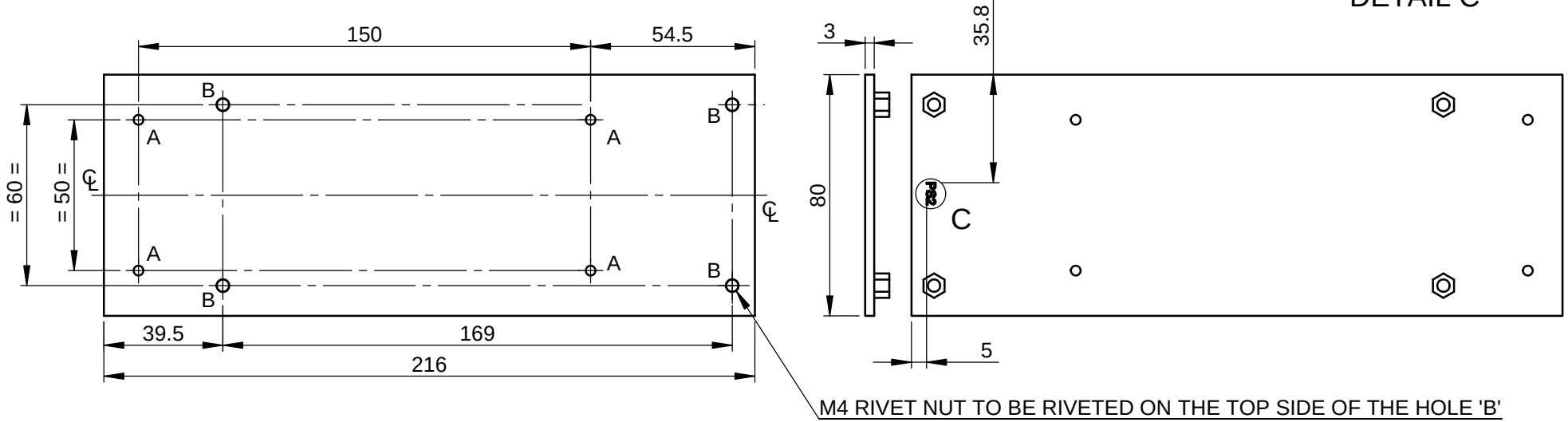

DETAIL C

NOTE:

1. AVOID SHARP EDGES AND CORNERS
2. 3x0.5⩛ TEXT TO BE ENGRAVED AND FILLED WITH BLACK PAINT

SL NO	REF	DESCRIPTION	QTY
1	A	∅3.2	4
2	B	M4 RIVET NUT	4

REV	CN.NO.	DATE	DESCRIPTION	CHECKED	APPROVED	NEXT ASSEMBLY	ITEM	QTY
4								
3								
2								
1								
0		18.09.17	ORIGINAL			DSA 36 109 0 021	9	2

MATERIAL	FINISH	PROJ.		PRJ.
ALUMINIUM H32-5052	YELLOW CC COATING		TOL.GEN. ± IS: 2102 TOL.AXIS. ± (MED.)	109

DRAWN	CHECKED	APPROVED	DIMNS	SCALE	TITLE
MALIKSAD			mm	NTS	PSU PLATE
DATE 18.09.17	DATE	DATE	DRG. NUMBER		SIZE / ISSUE
KERALA STATE ELECTRONICS DEVELOPMENT CORPORATION LIMITED			DPD 36 109 0 053		A4 / 1
					NO.OF SHEETS 1 / 1

RESTRICTED

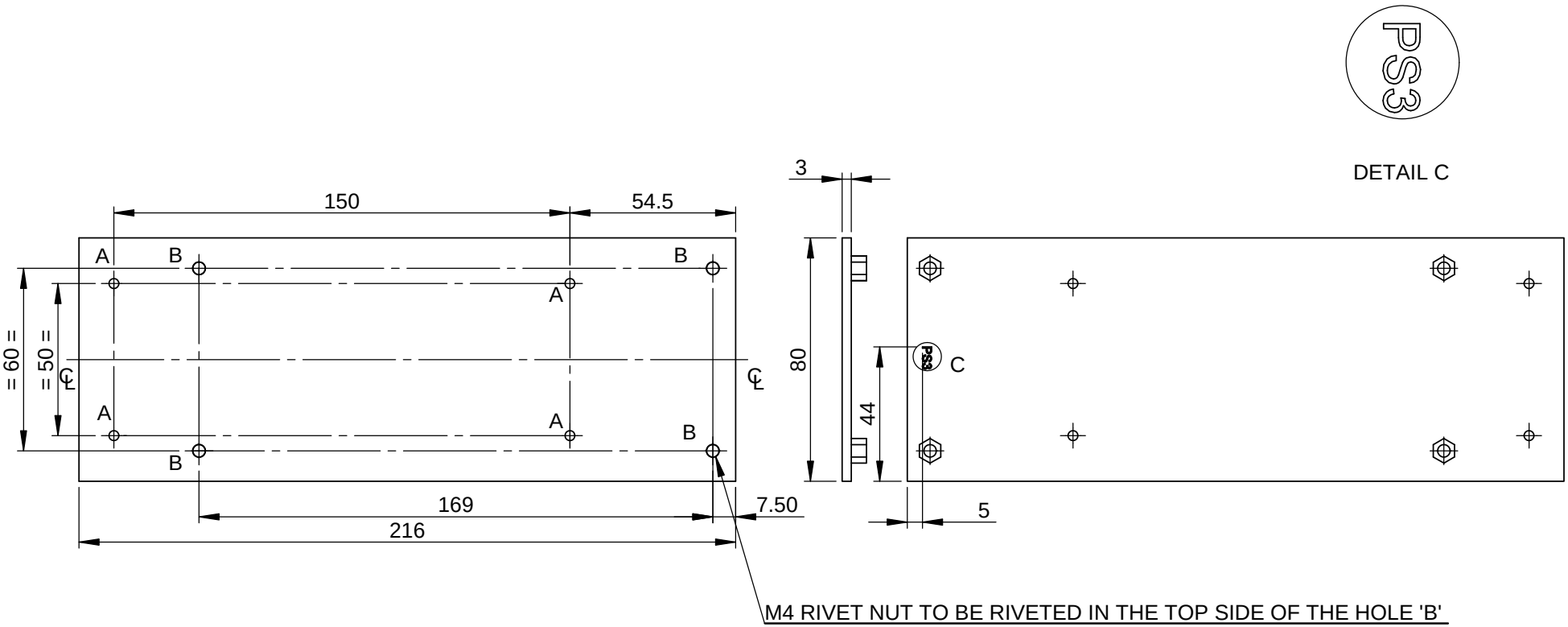

DETAIL C

NOTE:

1. AVOID SHARP EDGES AND CORNERS
2. 3x0.5↓ TEXT TO BE ENGRAVED AND FILLED WITH BLACK PAINT

SL NO	REF	DESCRIPTION	QTY
1	A	∅3.2	4
2	B	M4 RIVET NUT	4

REV	CN.NO.	DATE	DESCRIPTION	CHECKED	APPROVED	NEXT ASSEMBLY	ITEM	QTY
0		10.08.17	ORIGINAL			DSA 36 109 0 021		1

MATERIAL	FINISH	PROJ.	TOL.GEN. ± IS: 2102 TOL.AXIS. ± (MED.)	PRJ.
ALUMINIUM H32-5052	YELLOW CC COATING			109

DRAWN	CHECKED	APPROVED	DIMNS	SCALE	TITLE
MALIKSAD			mm	NTS	PSU PLATE-PS3
DATE 10.08.17	DATE	DATE	DRG. NUMBER		SIZE / ISSUE
KERALA STATE ELECTRONICS DEVELOPMENT CORPORATION LIMITED			DPD 36 109 0 273		A4 / 1
					NO.OF SHEETS 1 / 1

RESTRICTED

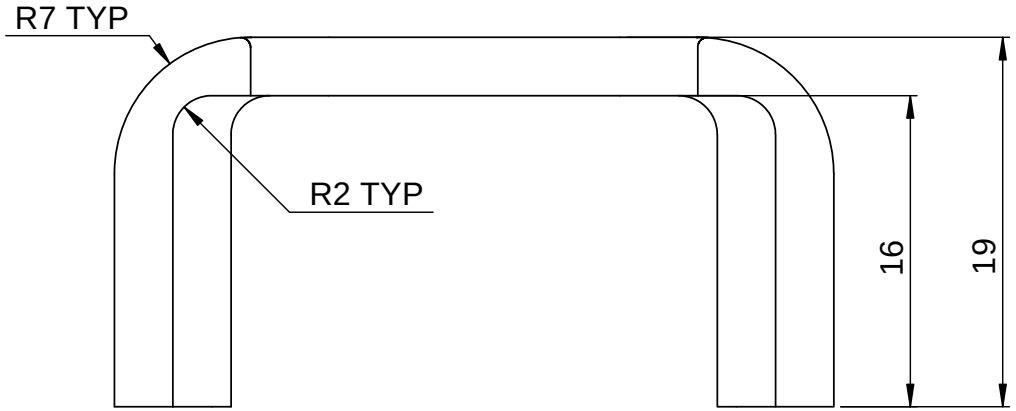

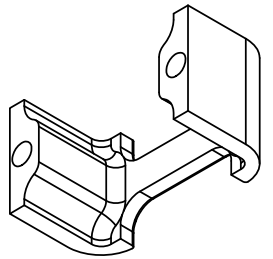

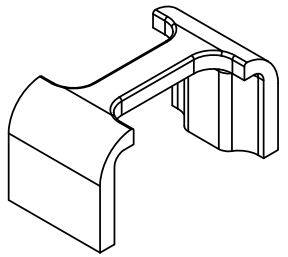

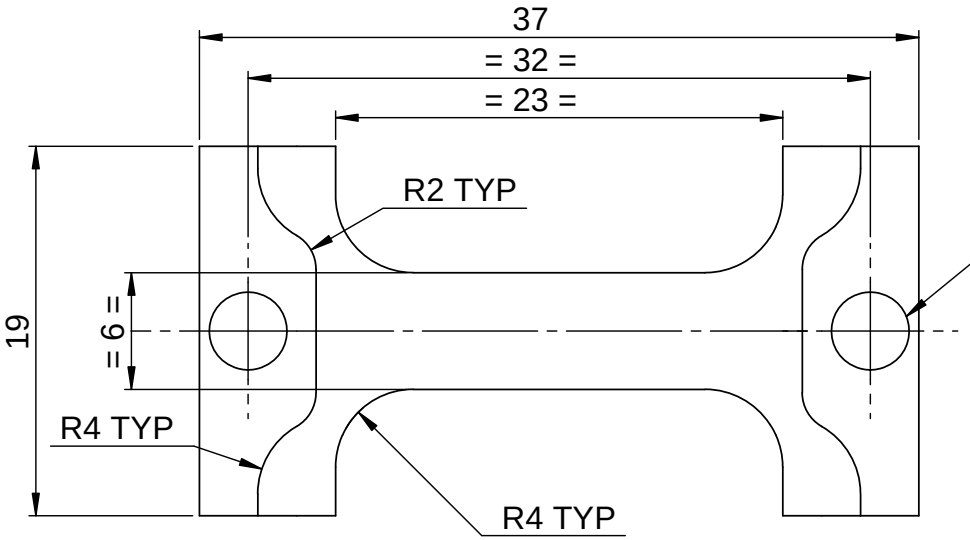

REV	CN.NO.	DATE	DESCRIPTION	CHECKED	APPROVED	NEXT ASSEMBLY	ITEM	QTY
4								
3								
2								
1								
0		17.10.17	ORIGINAL			DSA 36 109 0 201	10	01

MATERIAL: DELRIN	FINISH:	PROJ.	TOL.GEN. ± IS: 2102 TOL.AXIS. ± (MED.)	PRJ. 109	
DRAWN: MALIKSAD	CHECKED:	APPROVED:	DIMNS: mm	SCALE: NTS	TITLE: PTT SWITCH HOOK
DATE: 17.10.17	DATE:	DATE:	DRG. NUMBER: DPD 36 109 0 201	SIZE: A4	ISSUE: 1
KERALA STATE ELECTRONICS DEVELOPMENT CORPORATION LIMITED				NO.OF SHEETS: 1 / 1	

RESTRICTED

SL NO	REF	DESCRIPTION	QTY
1	A	∅4.5	6
2	B	∅6.2	4
3	C	∅3.2	6
4	D	M3 RIVET NUT	2

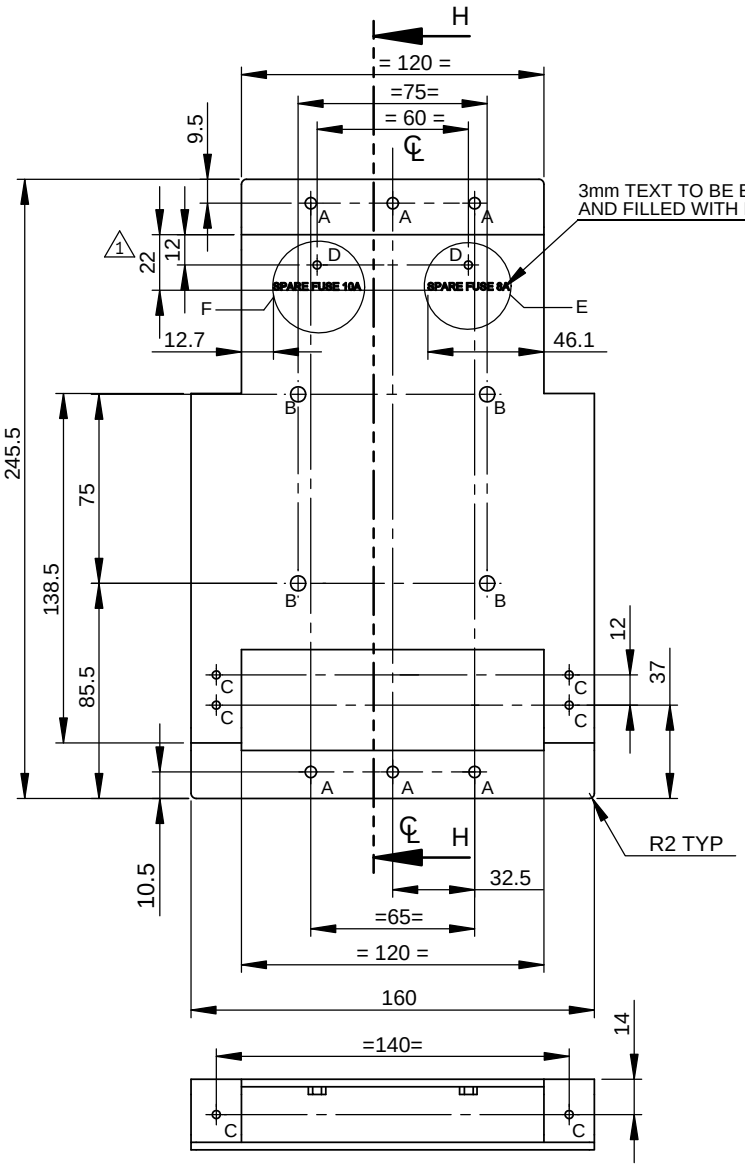

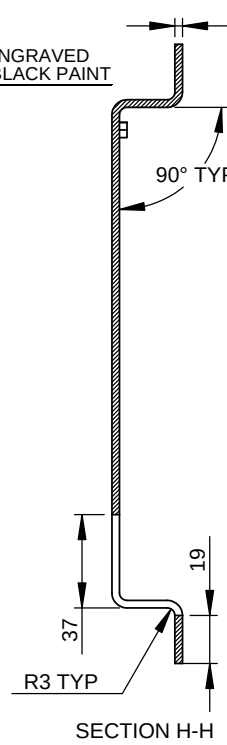

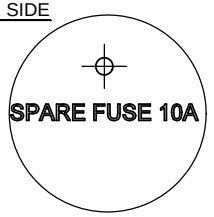

DETAIL F

DETAIL E

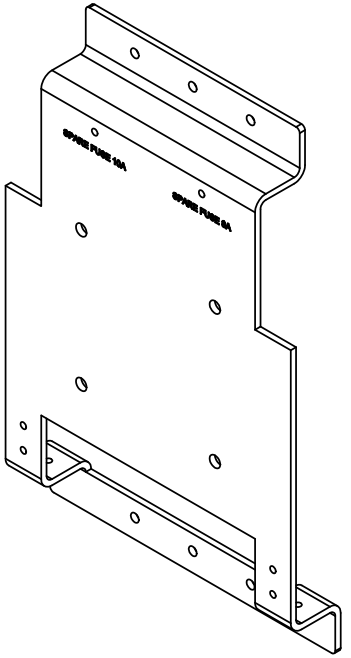

REV	CN.NO.	DATE	DESCRIPTION	CHECKED	APPROVED	NEXT ASSEMBLY	ITEM	QTY
4								
3								
2								
1		21.08.19	REVISED					
0		03.08.17	ORIGINAL			DSA 36 109 0 011	03	01

MATERIAL	FINISH	PROJ.	TOL.GEN. ± / TOL.AXIS. ±	PRJ.
3mm ALUMINIUM 5052-H32	YELLOW CC COATING		IS: 2102 (MED.)	109

DRAWN	CHECKED	APPROVED	DIMNS	SCALE	TITLE
MALIKSAD			mm	NTS	REAR DISPLAY COVER
DATE 21.08.19	DATE	DATE	DRG. NUMBER		SIZE: A4 / ISSUE: 1
KERALA STATE ELECTRONICS DEVELOPMENT CORPORATION LIMITED			DPD 36 109 0 117		NO.OF SHEETS: 1 / 1

RESTRICTED

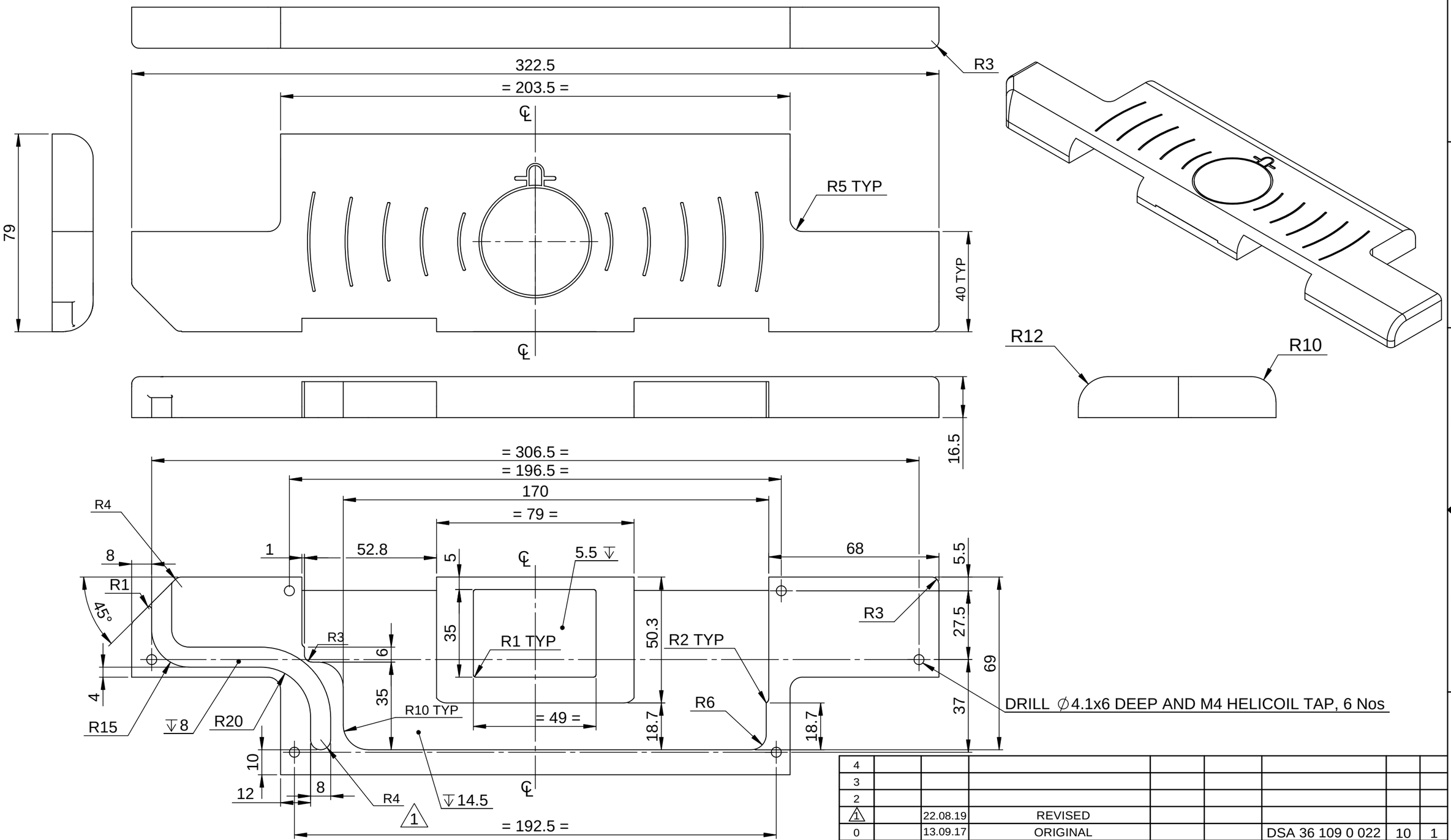

REV	CN.NO.	DATE	DESCRIPTION	CHECKED	APPROVED	NEXT ASSEMBLY	ITEM	QTY
4								
3								
2								
1		22.08.19	REVISED					
0		13.09.17	ORIGINAL			DSA 36 109 0 022	10	1

MATERIAL: ALUMINIUM HE-30	FINISH: YELLOW CC COATNG	PROJ.	TOL.GEN. ± IS:2102 TOL.AXIS. ± (MED)	PRJ. 109	
DRAWN: MALIKSAD	CHECKED	APPROVED	DIMNS: mm / SCALE: NTS	TITLE: REAR INTERMEDIATE PLATE	
DATE 22.08.19	DATE	DATE	DRG. NUMBER: DPD 36 109 0 110	SIZE: A3	ISSUE: 1
KERALA STATE ELECTRONICS DEVELOPMENT CORPORATION LIMITED.				NO.OF SHEETS: 1 / 2	

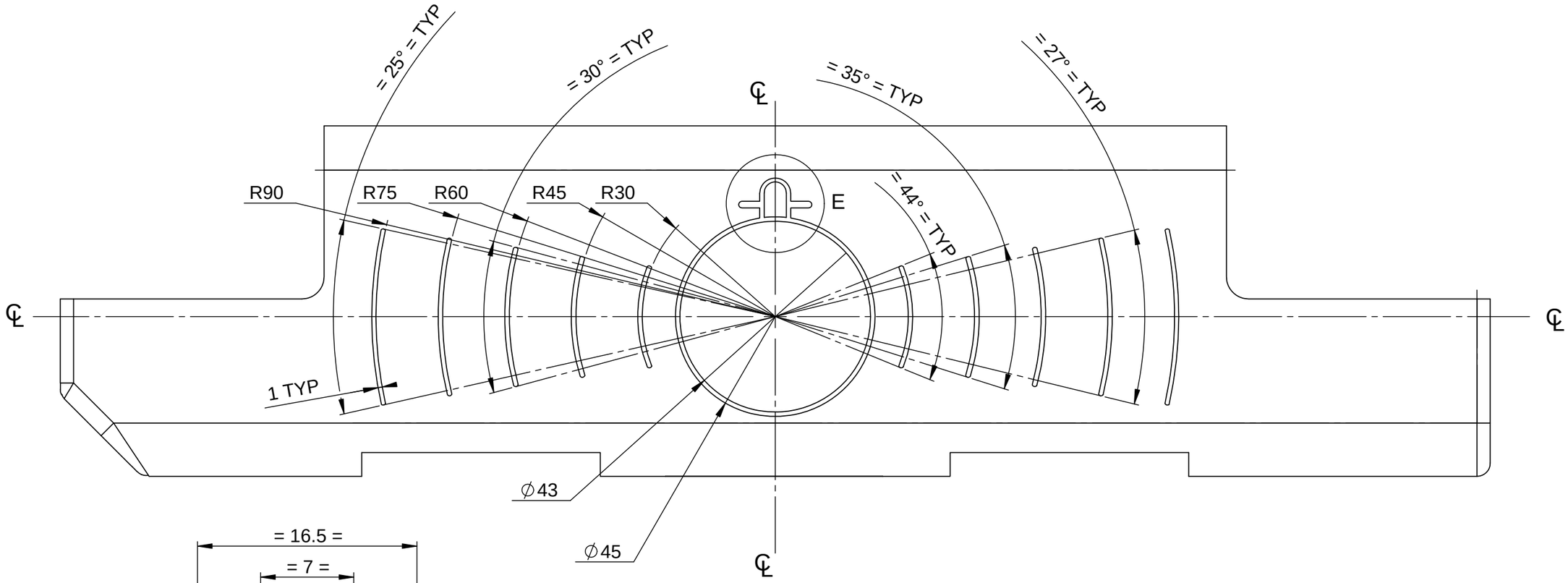

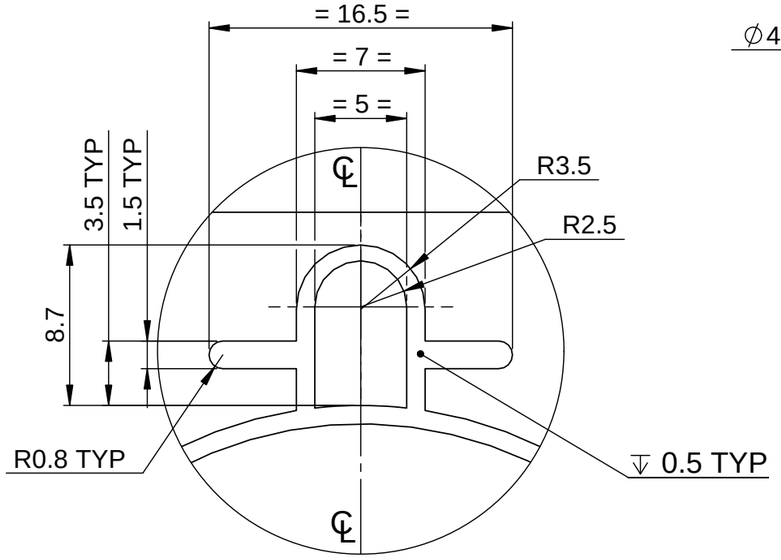

DETAIL E

1

NOTE:

1. AVOID SHARP EDGES AND CORNERS
2. DIMENSIONLESS FEATURES TO BE MEASURED FROM IGES

REV	CN.NO.	DATE	DESCRIPTION	CHECKED	APPROVED	NEXT ASSEMBLY	ITEM	QTY
4								
3								
2								
1		22.08.19	REVISED					
0		13.09.17	ORIGINAL			DSA 36 109 0 022	10	1

MATERIAL: ALUMINIUM HE-30	FINISH: YELLOW CC COATING	PROJ.	TOL.GEN. ± IS:2102 TOL.AXIS. ± (MED)	PRJ. 109	
DRAWN: MALIKSAD	CHECKED	APPROVED	DIMNS: mm	SCALE: NTS	TITLE: REAR INTER-MEDIATE PLATE
DATE: 22.08.19	DATE	DATE	DRG. NUMBER: DPD 36 109 0 110	SIZE: A3	ISSUE: 1
KERALA STATE ELECTRONICS DEVELOPMENT CORPORATION LIMITED.				NO.OF SHEETS: 2 / 2	

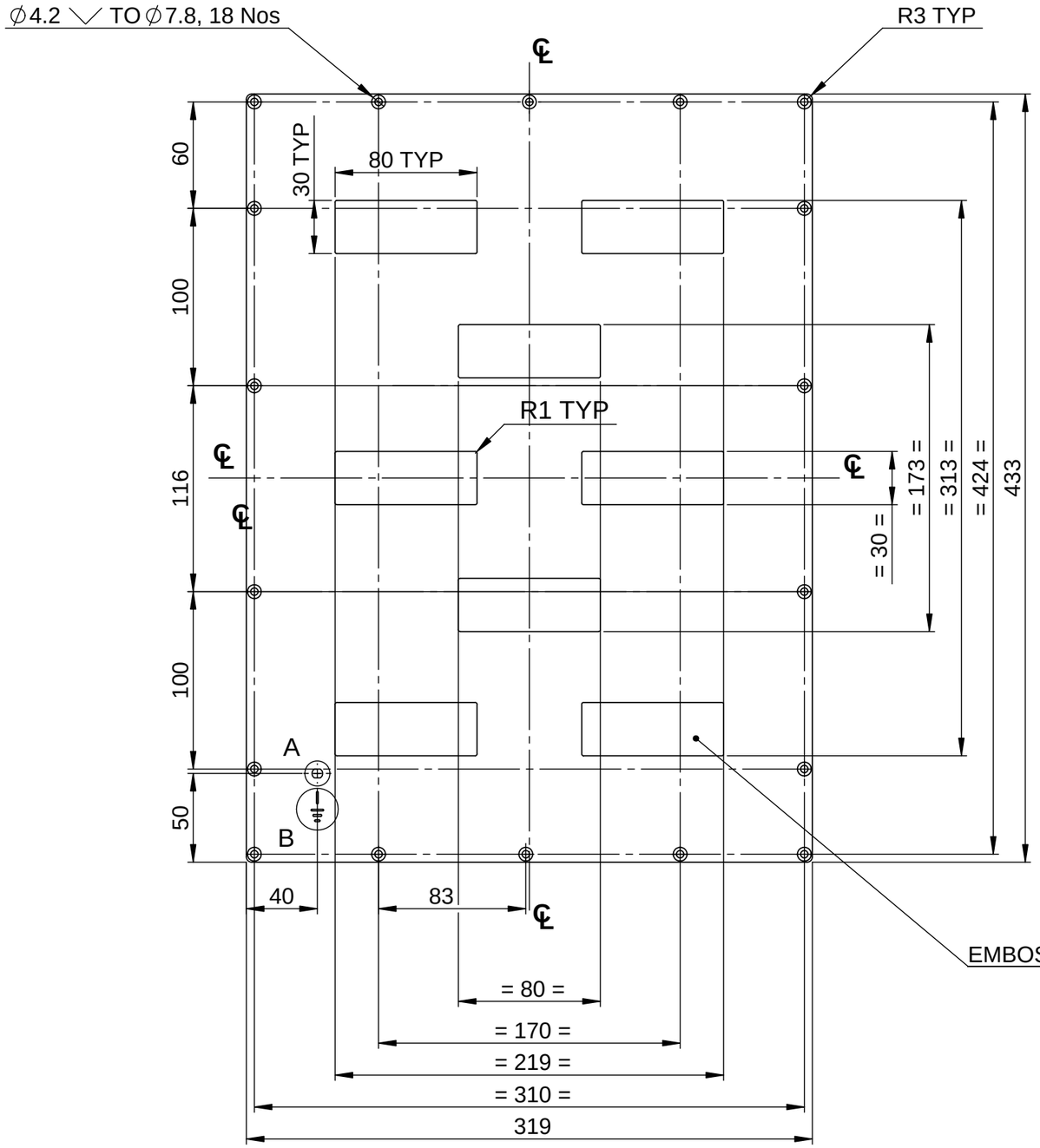

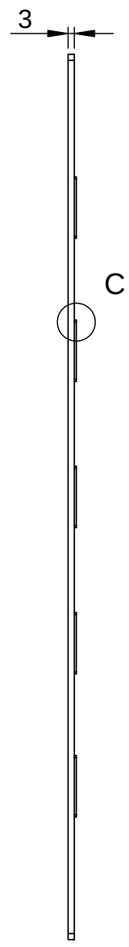

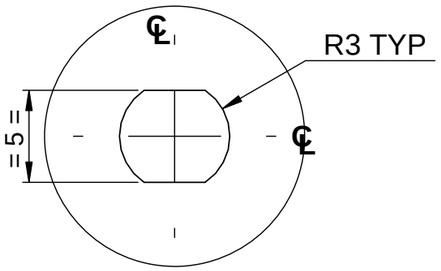

DETAIL A

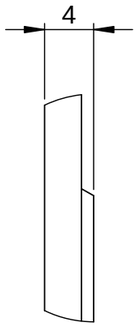

DETAIL C

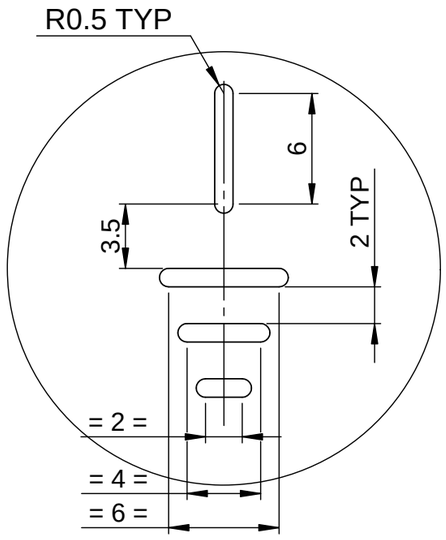

DETAIL B

NOTE:

1. AVOID SHARP EDGES AND CORNERS
2. EARTH SYMBOL TO BE ENGRAVED AND FILLED WITH BLACK PAINT

REV	CN.NO.	DATE	DESCRIPTION	CHECKED	APPROVED	NEXT ASSEMBLY	ITEM	QTY
4								
3								
2								
1								
0		27.08.17	ORIGINAL			DSA 36 109 0 012	1	1

MATERIAL	FINISH	PROJ.		PRJ.
ALUMINIUM H32-5052	YELLOW CC COATING		TOL.GEN. ± IS:2102 TOL.AXIS. ± (MED)	109

DRAWN	CHECKED	APPROVED	DIMNS	SCALE	TITLE
MALIKSAD			mm	NTS	REAR PLATE
DATE 27.08.17	DATE	DATE			

KERALA STATE ELECTRONICS DEVELOPMENT CORPORATION LIMITED

DRG. NUMBER	SIZE	ISSUE
DPD 36 109 0 124	A3	1
	NO.OF SHEETS	1 / 1

RESTRICTED

RESTRICTED

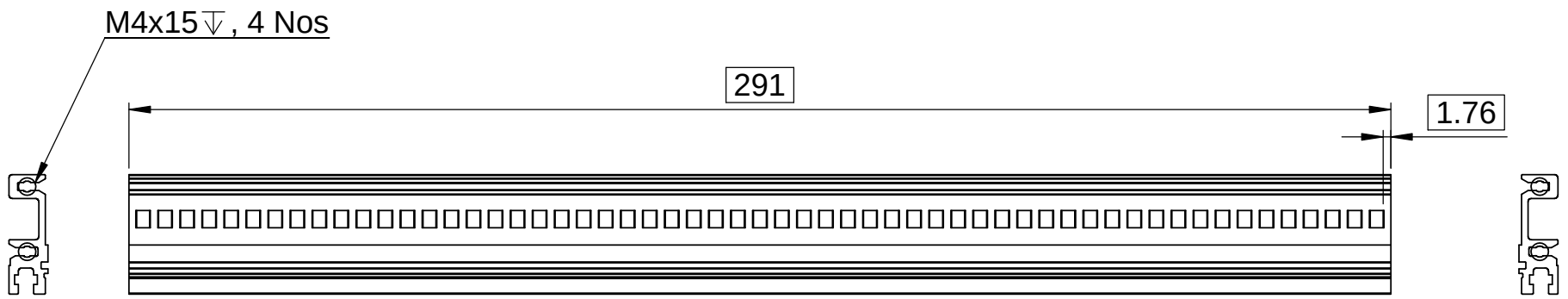

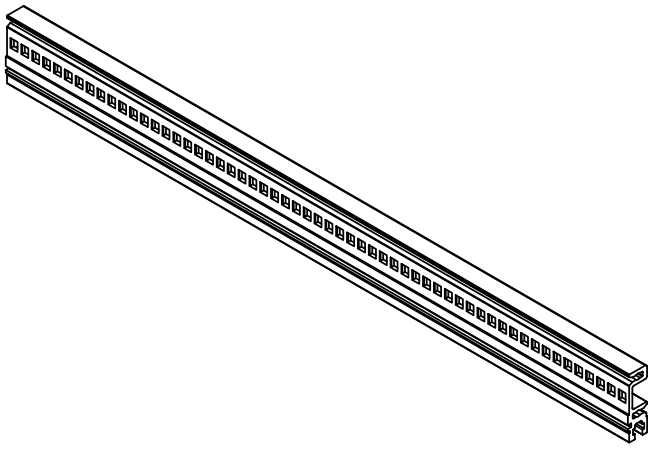

NOTE:

AVOID SHARP EDGES AND CORNERS

REV	CN.NO.	DATE	DESCRIPTION	CHECKED	APPROVED	NEXT ASSEMBLY	ITEM	QTY
4								
3								
2								
1								
0		19.08.17	ORIGINAL			DSA 36 109 0 012	7	1

MATERIAL: STANDARD PROFILE SCHROFF PART NO:34560-563	FINISH: -	PROJ.	TOL.GEN. ± IS: 2102 TOL.AXIS. ± (MED.)	PRJ. 109	
DRAWN: MALIKSAD	CHECKED	APPROVED	DIMNS: mm / SCALE: NTS	TITLE: REAR PROFILE	
DATE 19.08.17	DATE	DATE	DRG. NUMBER: DPD 36 109 0 237	SIZE: A4	ISSUE: 1
KERALA STATE ELECTRONICS DEVELOPMENT CORPORATION LIMITED				NO.OF SHEETS: 1 / 1	

RESTRICTED

RESTRICTED

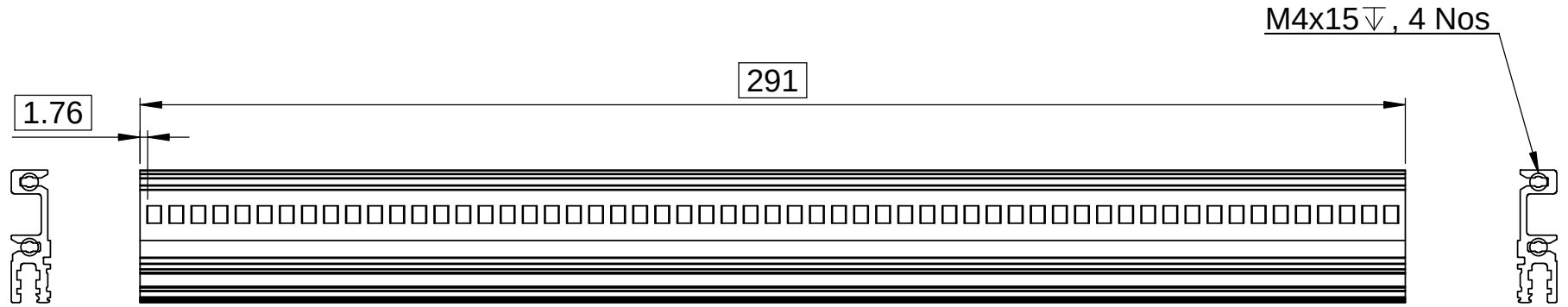

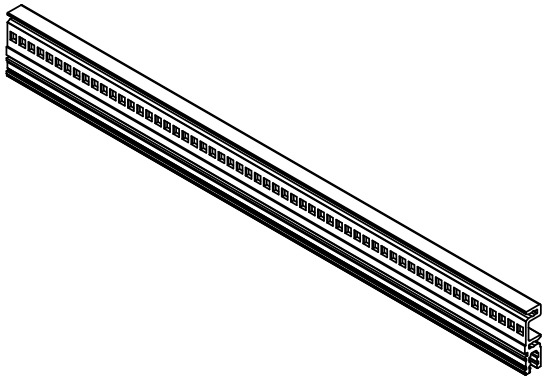

NOTE:

AVOID SHARP EDGES AND CORNERS

4								
3								
2								
1								
0		19.08.17	ORIGINAL			DSA 36 109 0 018	06	2
REV	CN.NO.	DATE	DESCRIPTION	CHECKED	APPROVED	NEXT ASSEMBLY	ITEM	QTY

MATERIAL: STANDARD PROFILE SCHROFF PART NO:34560-763	FINISH: -	PROJ.	TOL.GEN. ± IS: 2102 TOL.AXIS. ± (MED.)	PRJ. 109		
DRAWN: MALIKSAD	CHECKED	APPROVED	DIMNS: mm	SCALE: NTS	TITLE: REAR PROFILE	
DATE 19.08.17	DATE	DATE	DRG. NUMBER: DPD 36 109 0 227		SIZE: A4	ISSUE: 1
KERALA STATE ELECTRONICS DEVELOPMENT CORPORATION LIMITED					NO.OF SHEETS: 1 / 1	

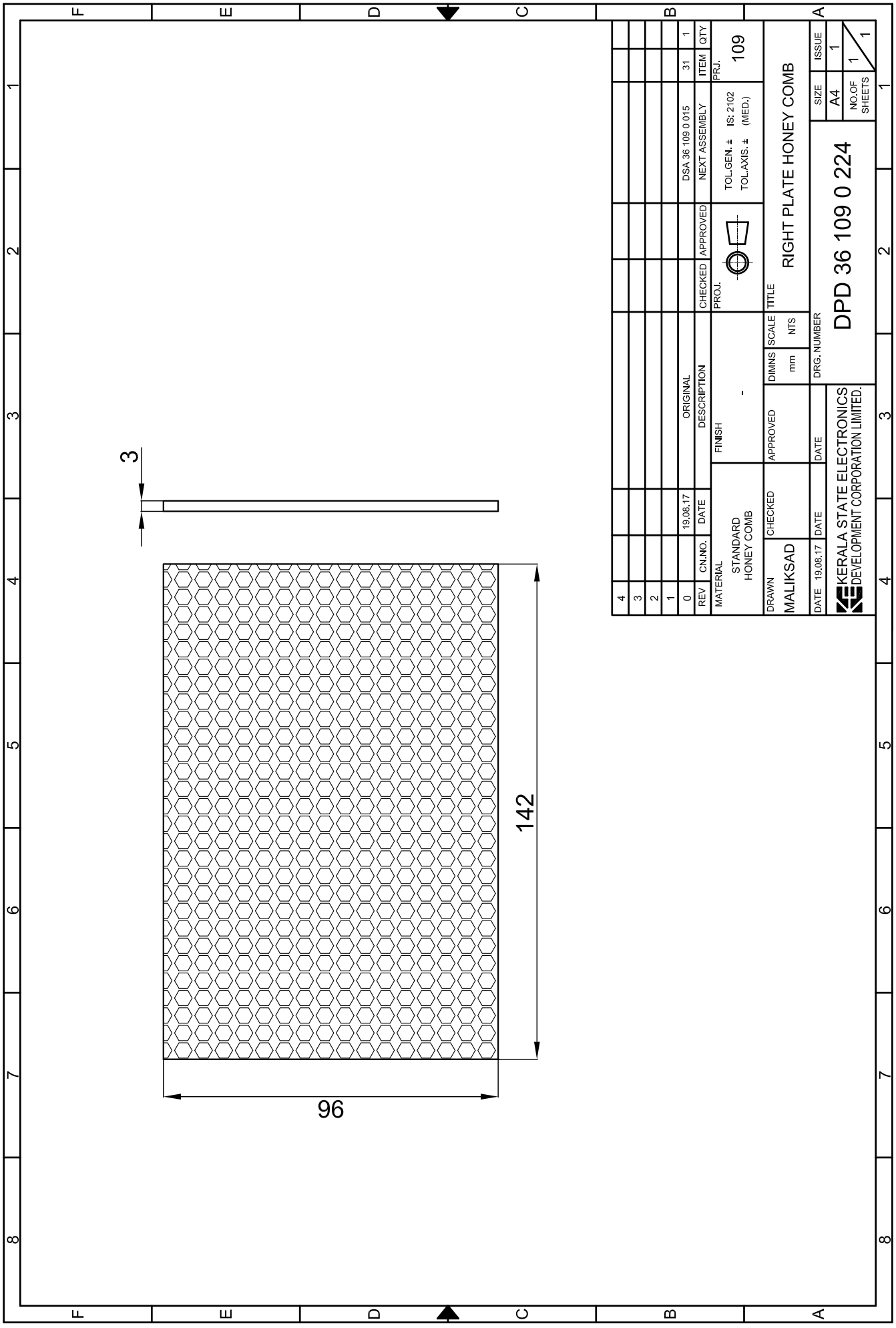
3
142
96
4
3
2
1
0
REV
CN.NO.
DATE
ORIGINAL
19.08.17
DESCRIPTION
CHECKED
APPROVED
DSA 36 109 0 015
31
NEXT ASSEMBLY
ITEM
1
QTY
PRJ.
109
TOL.GEN. ± IS: 2102
TOL.AXIS. ± (MED.)
PROJ.
MATERIAL
STANDARD
HONEY COMB
FINISH
-
TITLE
RIGHT PLATE HONEY COMB
DRAWN
MALIKSAD
CHECKED
APPROVED
DIMNS
mm
SCALE
NTS
DRG. NUMBER
DPD 36 109 0 224
DATE 19.08.17
DATE
DATE
KERALA STATE ELECTRONICS
DEVELOPMENT CORPORATION LIMITED.
SIZE
A4
ISSUE
1
NO.OF
SHEETS
1
1

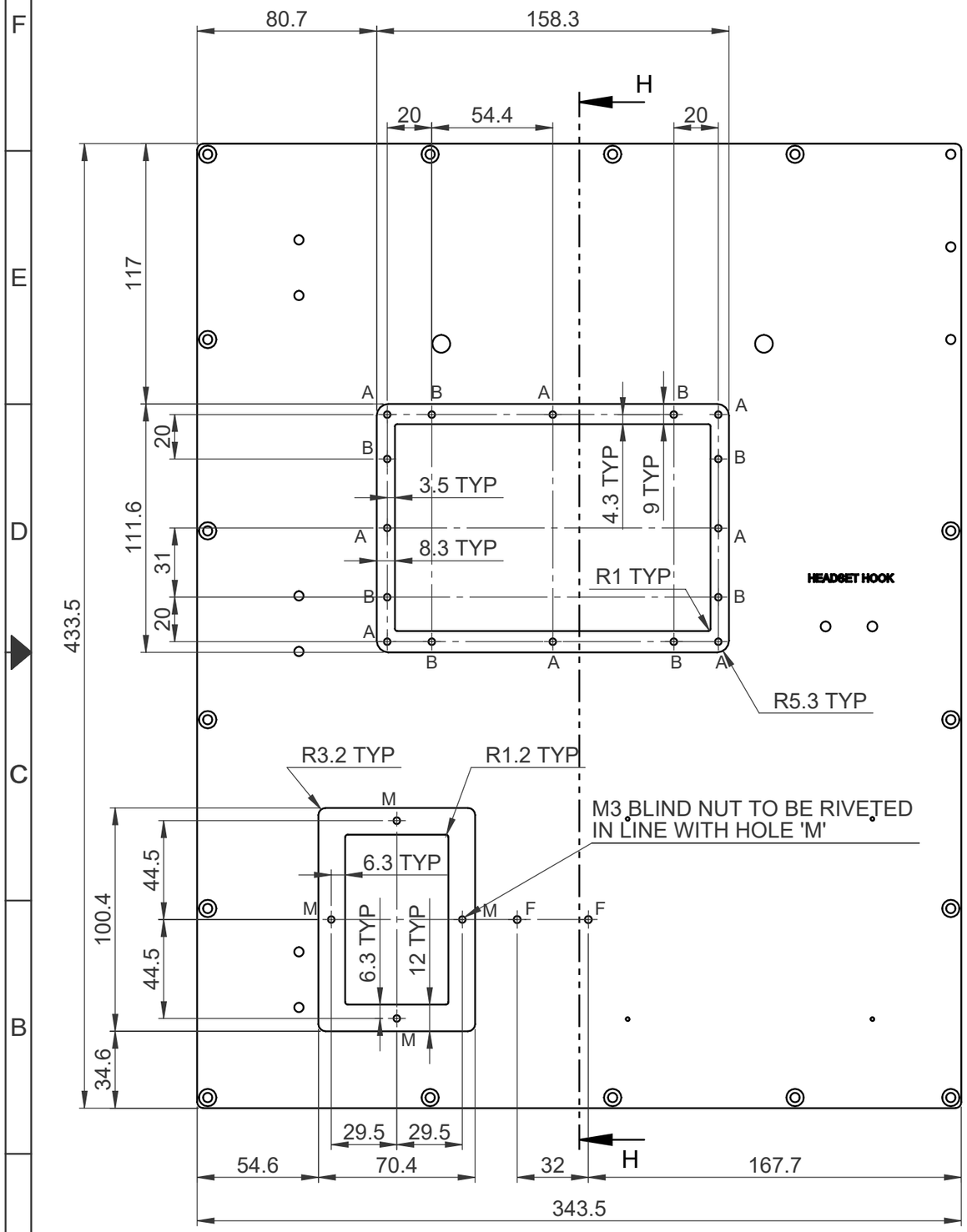

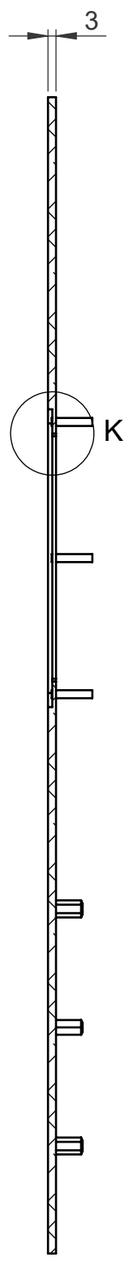

SECTION H-H

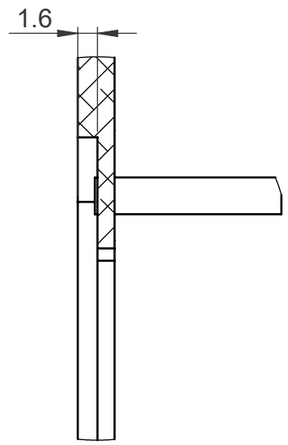

DETAIL K

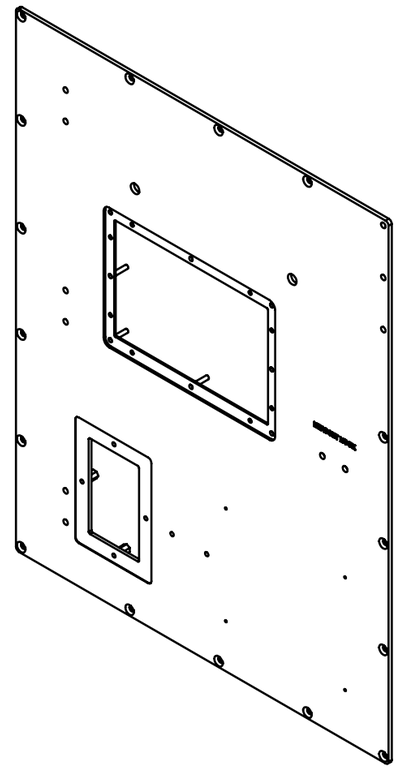

REV	CN.NO.	DATE	DESCRIPTION	CHECKED	APPROVED	NEXT ASSEMBLY	ITEM	QTY
4								
3								
2	357	06.05.23	REVISED					
1		22.08.19	REVISED					
0		19.08.17	ORIGINAL			DSA 36 109 0 015	4	1

MATERIAL: ALUMINIUM HE-30	FINISH: YELLOW CC COATING	PROJ.	TOL.GEN. ± IS:2102 TOL.AXIS. ± (MED)	PRJ. 109	
DRAWN: MALIKSAD	CHECKED	APPROVED	DIMNS: mm	SCALE: NTS	TITLE: RIGHT PLATE
DATE 06.05.23	DATE	DATE	DRG. NUMBER: DPD 36 109 0 057	SIZE: A3	ISSUE: 1
KERALA STATE ELECTRONICS DEVELOPMENT CORPORATION LIMITED				NO.OF SHEETS: 1 / 2	

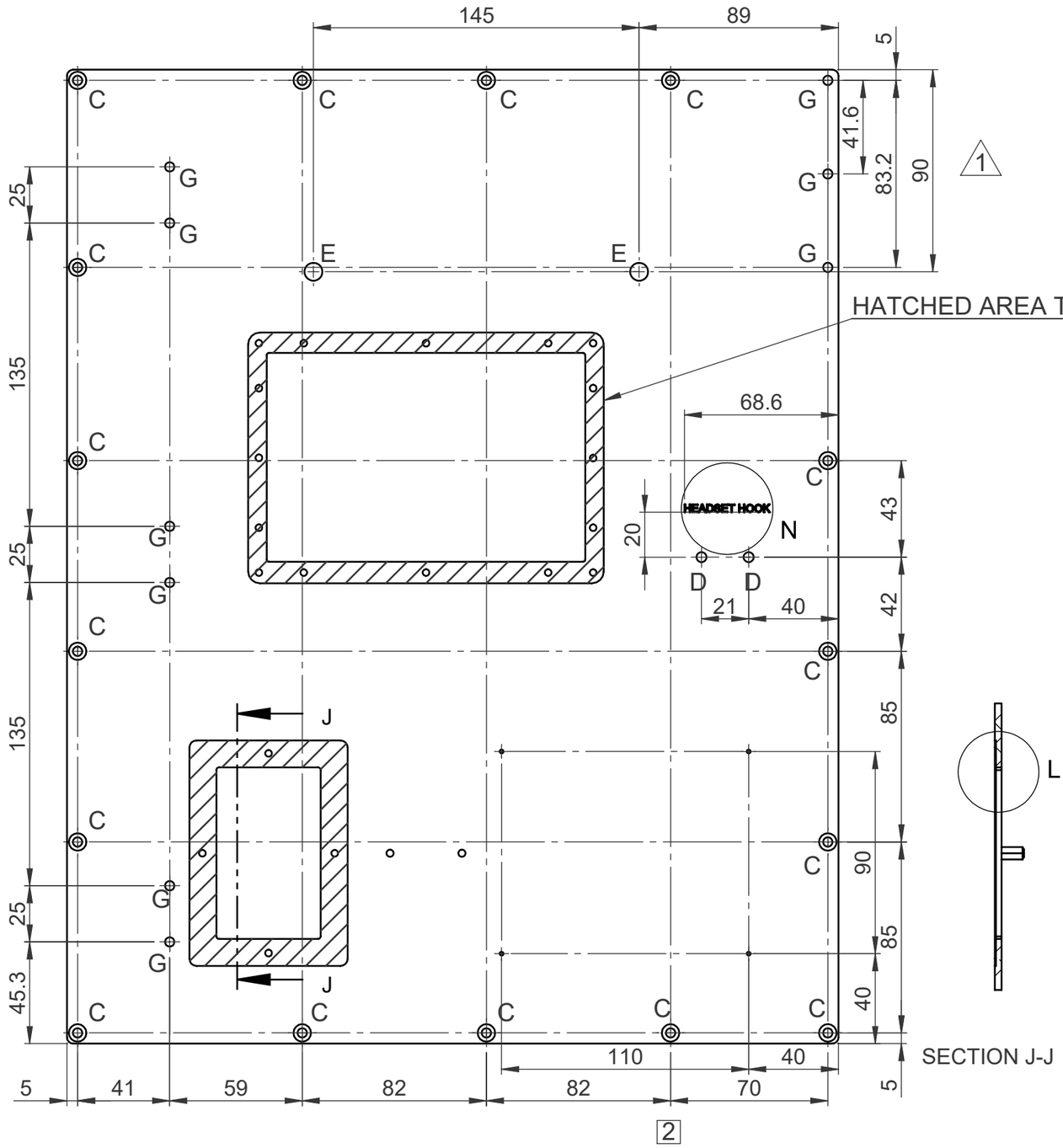

HATCHED AREA TO BE MASKED BEFORE PAINTING

DETAIL N

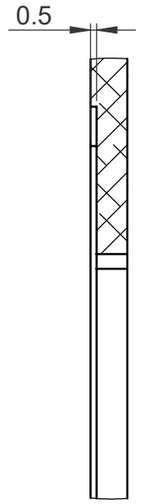

DETAIL L

SECTION J-J

△1 □2

SL NO	REF	DESCRIPTION	QTY
1	A	M3x16 CLINCH SCREW	8
2	B	∅3 HOLES FOR RIVET	8
3	C	∅4.2 ⌵ ∅7.8	16
4	D	∅4.5	2
5	E	∅8.2	2
6	F	∅3.2	2
7	G	∅4.2	9
8	M	M3x6 BLIND NUT	4
9	N	M2 TAP	4

REV	CN.NO.	DATE	DESCRIPTION	CHECKED	APPROVED	NEXT ASSEMBLY	ITEM	QTY
4								
3								
□2	357	06.05.23	REVISED					
△1		22.08.19	REVISED					
0		19.08.17	ORIGINAL			DSA 36 109 0 015	4	1

MATERIAL: ALUMINIUM HE-30
FINISH: YELLOW CC COATING
PROJ.
TOL.GEN. ± IS:2102
TOL.AXIS. ± (MED)
PRJ. 109

DRAWN: MALIKSAD
CHECKED:
APPROVED:
DIMNS: mm
SCALE: NTS
TITLE: RIGHT PLATE

DATE 06.05.23 | DATE | DATE

KERALA STATE ELECTRONICS DEVELOPMENT CORPORATION LIMITED

DRG. NUMBER: DPD 36 109 0 057

SIZE: A3
ISSUE: 1
NO.OF SHEETS: 2 / 2

NOTE

1. AVOID SHARP CORNERS AND EDGES
2. 3x0.5⩛ TEXT TO BE ENGRAVED AND FILLED WITH BLACK PAINT.

RESTRICTED

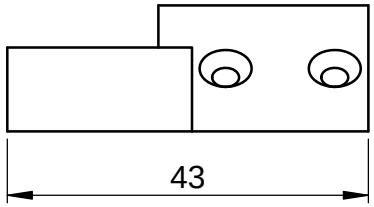

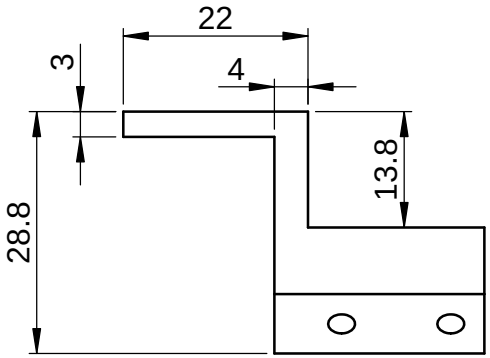

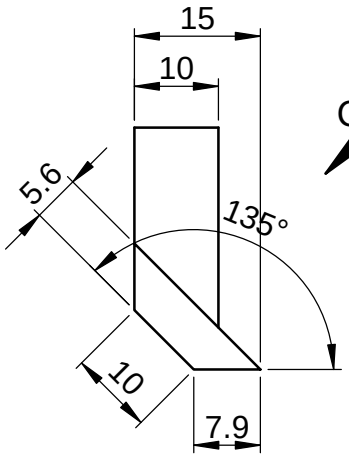

C

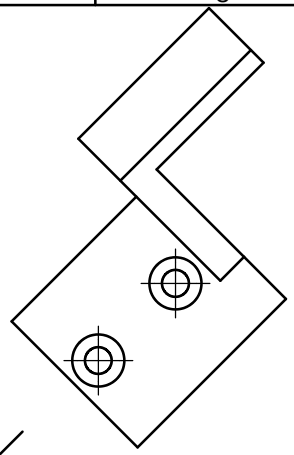

VIEW C

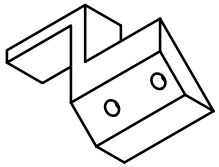

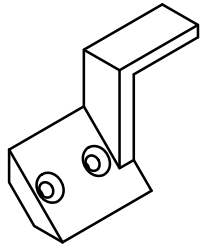

A

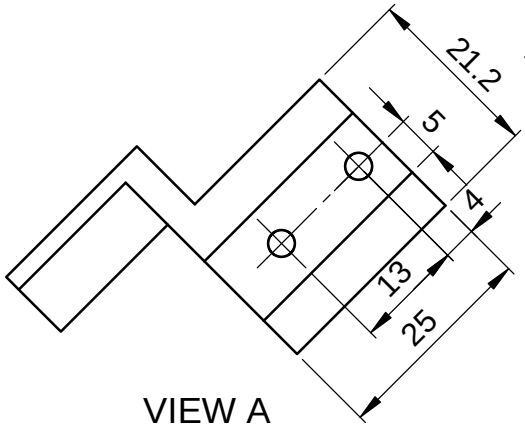

VIEW A

NOTE:

AVOID SHARP EDGES AND CORNERS

4								
3								
2								
1								
0		19.09.17	ORIGINAL			DSA 36 109 0 020	12	4
REV	CN.NO.	DATE	DESCRIPTION	CHECKED	APPROVED	NEXT ASSEMBLY	ITEM	QTY

MATERIAL: ALUMINIUM HE-30	FINISH: 25 MICRON BLACK ANODISING	PROJ.	TOL.GEN. ± IS: 2102 TOL.AXIS. ± (MED.)	PRJ. 109	
DRAWN: MALIKSAD	CHECKED	APPROVED	DIMNS: mm	SCALE: NTS	TITLE: SHOCK ROACK CLAMP-1
DATE 19.09.17	DATE	DATE	DRG. NUMBER: DPD 36 109 0 032	SIZE: A4	ISSUE: 1
KERALA STATE ELECTRONICS DEVELOPMENT CORPORATION LIMITED				NO.OF SHEETS: 1 / 1	

RESTRICTED

RESTRICTED

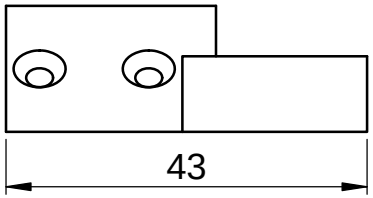

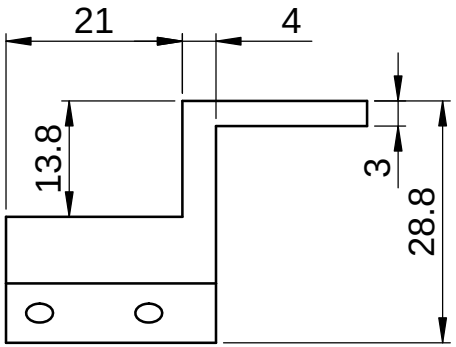

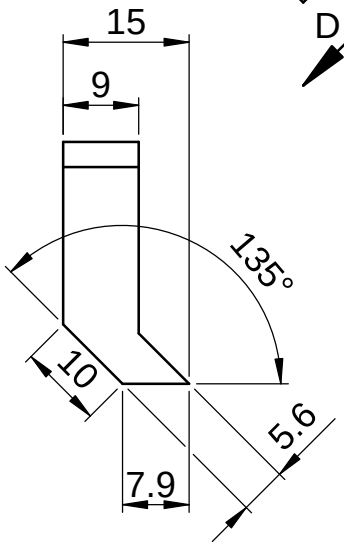

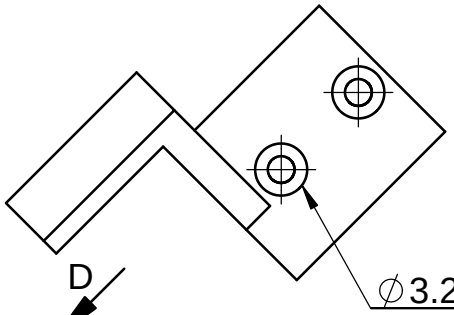

VIEW D

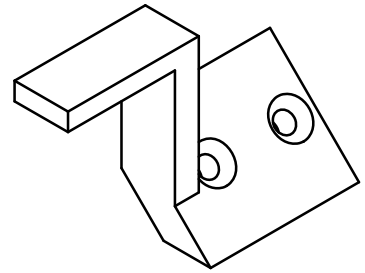

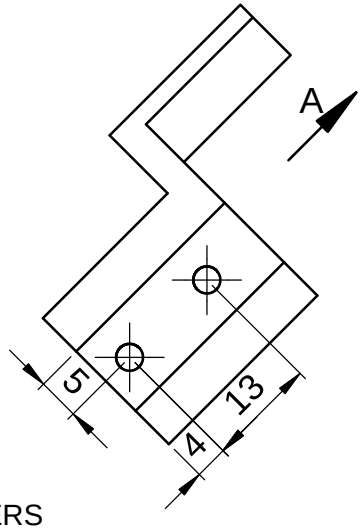

VIEW A

NOTE:

AVOID SHARP EDGES AND CORNERS

4								
3								
2								
1								
0		16.09.17	ORIGINAL			DSA 36 109 0 021	22	4
REV	CN.NO.	DATE	DESCRIPTION	CHECKED	APPROVED	NEXT ASSEMBLY	ITEM	QTY

MATERIAL: ALUMINUM HE-30	FINISH: 25 MICRON BLACK ANODISING	PROJ.	TOL.GEN. ± IS: 2102 TOL.AXIS. ± (MED.)	PRJ. 109	
DRAWN: MALIKSAD	CHECKED	APPROVED	DIMNS: mm / SCALE: NTS	TITLE: SHOCK ROACK CLAMP-2	
DATE 16.09.17	DATE	DATE	DRG. NUMBER: DPD 36 109 0 172	SIZE: A4	ISSUE: 1
KERALA STATE ELECTRONICS DEVELOPMENT CORPORATION LIMITED				NO.OF SHEETS: 1 / 1	

RESTRICTED

RESTRICTED

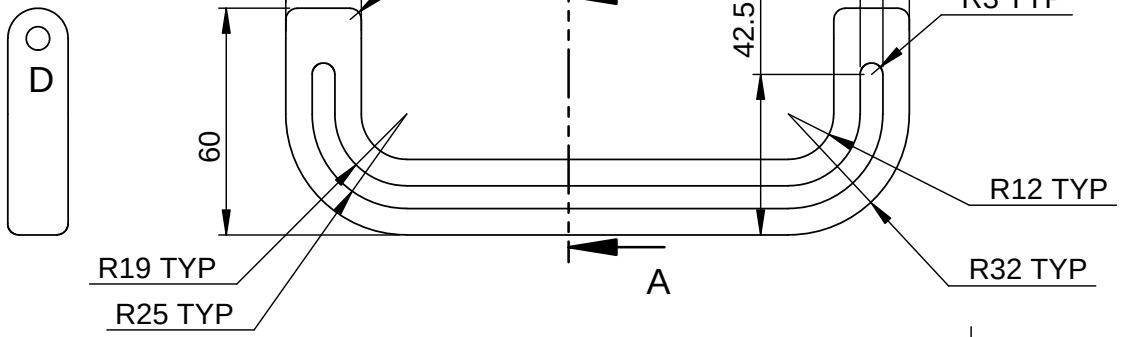

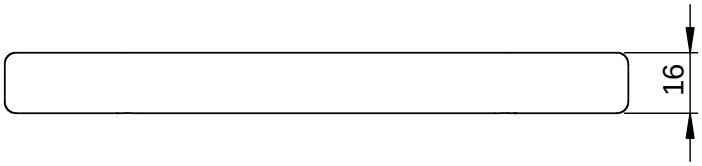

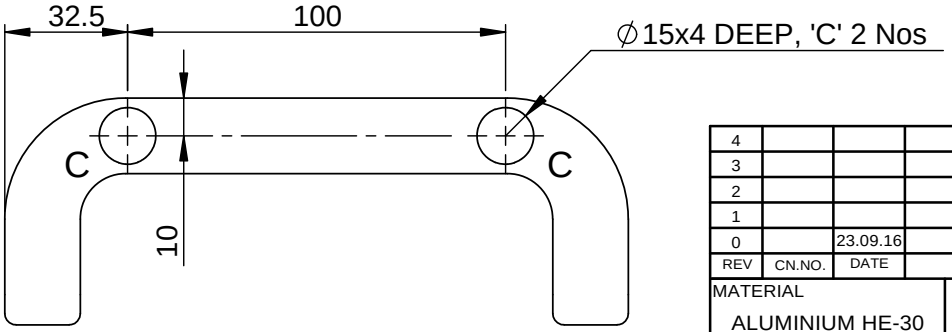

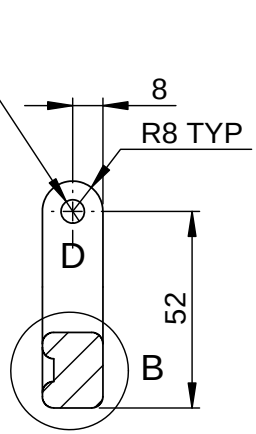

SECTION A-A

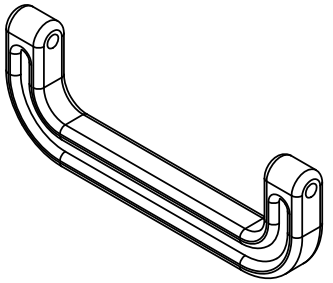

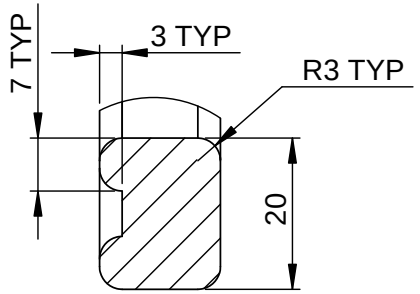

DETAIL B

NOTE

1. AVOID SHARP EDGES AND CORNERS
2. ALL BURRS TO BE REMOVED

REV	CN.NO.	DATE	DESCRIPTION	CHECKED	APPROVED	NEXT ASSEMBLY	ITEM	QTY
4								
3								
2								
1						DSA 36 109 0 019	17	01
0		23.09.16	ORIGINAL			DSA 36 109 0 015	08	01

MATERIAL: ALUMINIUM HE-30	FINISH: YELLOW CC COATING	PROJ.	TOL.GEN. ± IS: 2102 TOL.AXIS. ± (MED.)	PRJ. 109	
DRAWN: MALIKSAD	CHECKED	APPROVED	DIMNS: mm / SCALE: NTS	TITLE: SIDE HANDLE	
DATE 23.09.16	DATE	DATE	DRG. NUMBER: DPD 36 109 0 061	SIZE: A4	ISSUE: 1
KERALA STATE ELECTRONICS DEVELOPMENT CORPORATION LIMITED				NO.OF SHEETS: 1 / 1	

RESTRICTED

RESTRICTED

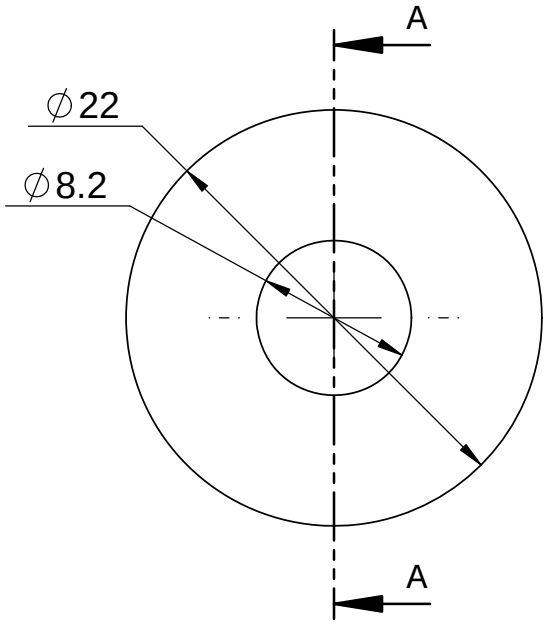

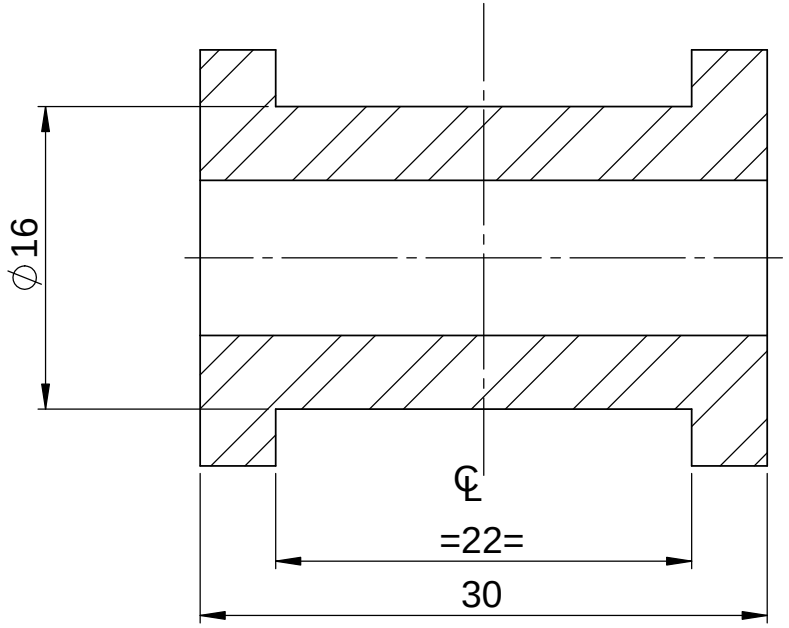

SECTION A-A

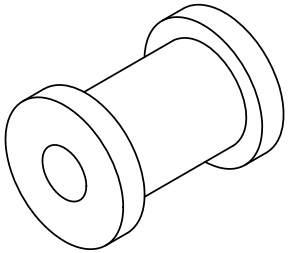

NOTE

1. AVOID SHARP EDGES AND CORNERS

REV	CN.NO.	DATE	DESCRIPTION	CHECKED	APPROVED	NEXT ASSEMBLY	ITEM	QTY
4								
3								
2								
1								
0		12.08.17	ORIGINAL			DSA 36 109 0 018	9	4

MATERIAL	FINISH	PROJ.		PRJ.
DELRIN	--		TOL.GEN. ± IS: 2102 TOL.AXIS. ± (MED.)	109

DRAWN	CHECKED	APPROVED	DIMNS	SCALE	TITLE
MALIKSAD			mm	NTS	SPACER FOR CANOPY
DATE 12.08.17	DATE	DATE	DRG. NUMBER		SIZE / ISSUE
KERALA STATE ELECTRONICS DEVELOPMENT CORPORATION LIMITED			DPD 36 109 0 079		A4 / 1
					NO.OF SHEETS 1/1

RESTRICTED

RESTRICTED

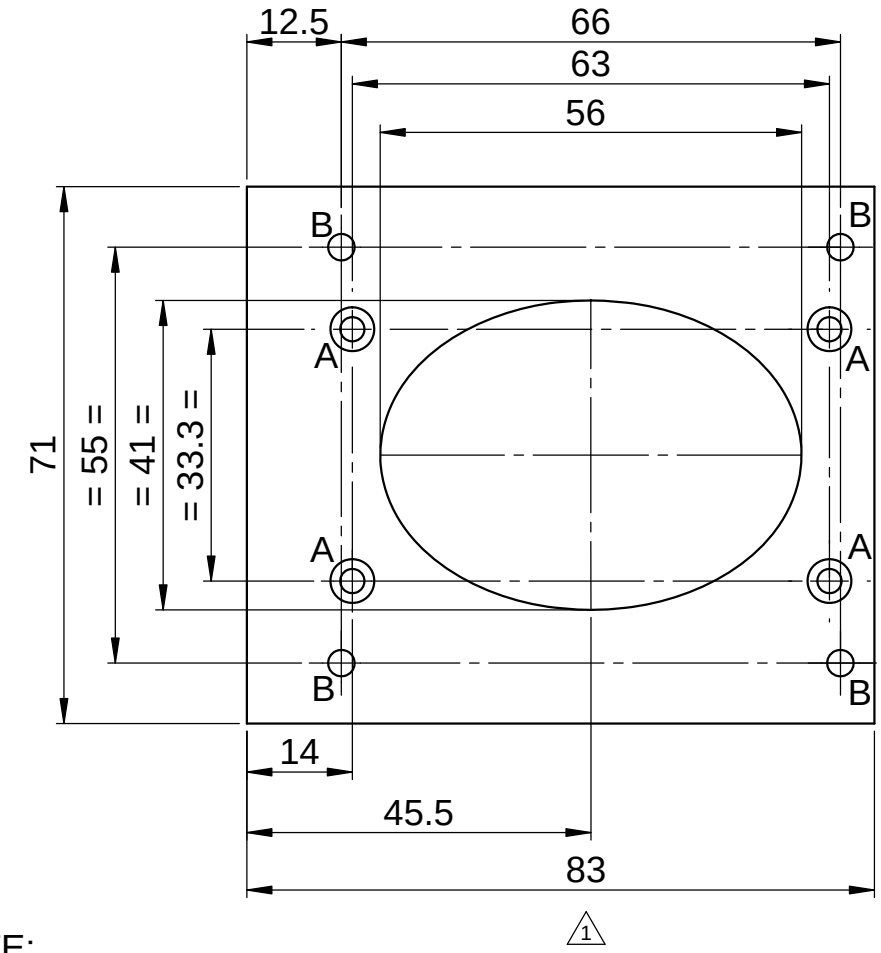

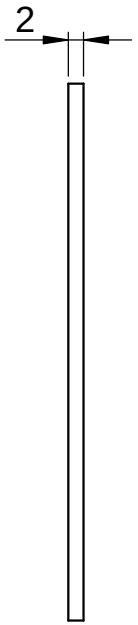

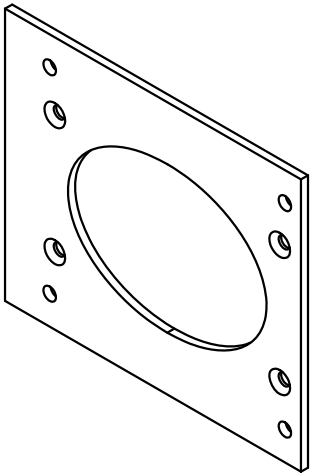

NOTE:

1. AVOID SHARP EDGES AND CORNERS
2. BURRS MUST BE REMOVED

SL NO	REF	DESCRIPTION	QTY
1	A	DRILL ∅3.2 ⌵ ∅5.8	4
2	B	∅3.5	4

REV	CN.NO.	DATE	DESCRIPTION	CHECKED	APPROVED	NEXT ASSEMBLY	ITEM	QTY
4								
3								
2								
1		21.08.19	REVISED					
0		11.08.17	ORIGINAL			DSA 36 109 0 011	8	2

MATERIAL	FINISH	PROJ.	TOL.GEN. ± / TOL.AXIS. ±	PRJ.
2 mm ALUMINIUM HE-32/5052	YELLOW CC COATING		IS: 2102 (MED.)	109

DRAWN	CHECKED	APPROVED	DIMNS	SCALE	TITLE
MALIKSAD			mm	NTS	SPEAKER PLATE
DATE 21.08.19	DATE	DATE	DRG. NUMBER		SIZE: A4 / ISSUE: 1

KERALA STATE ELECTRONICS DEVELOPMENT CORPORATION LIMITED

DPD 36 109 0 118

NO.OF SHEETS: 1 / 1

RESTRICTED

RESTRICTED

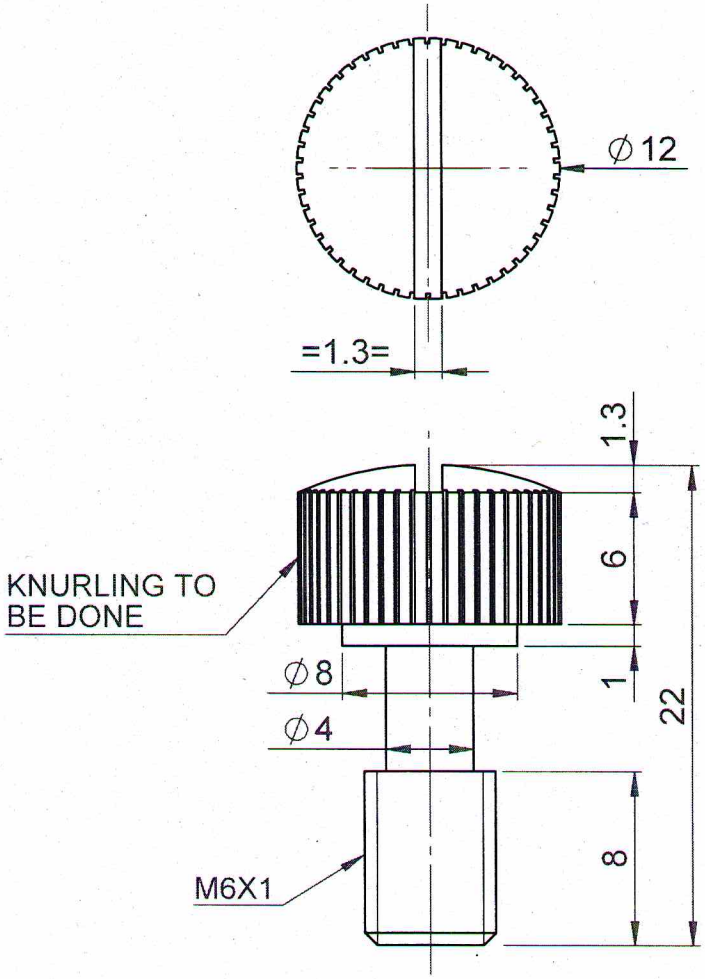

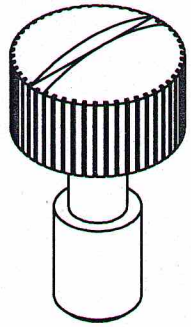

MASTER DOCUMENT

NOTE

1. AVOID SHARP CORNERS AND EDGES
2. BURRS MUST BE REMOVED

REV	CN.NO.	DATE	DESCRIPTION	CHECKED	APPROVED	NEXT ASSEMBLY	ITEM	QTY
4								
3								
2								
1								
0		23.11.16	ORIGINAL			DSA 36 109 0 022	5	2

MATERIAL: SS 316	FINISH: –	PROJ.	TOL.GEN. ± IS: 2102 TOL.AXIS. ± (MED.)	PRJ. 109	
DRAWN: THUSHANTH	CHECKED	APPROVED	DIMNS: mm	SCALE: NTS	TITLE: SS CAPTIVE SCREW
DATE: 23.11.16	DATE	DATE	DRG. NUMBER: DPD 36 109 0 133	SIZE: A4	ISSUE: 1
KERALA STATE ELECTRONICS DEVELOPMENT CORPORATION LIMITED				NO.OF SHEETS: 1 / 1	

RESTRICTED

RESTRICTED

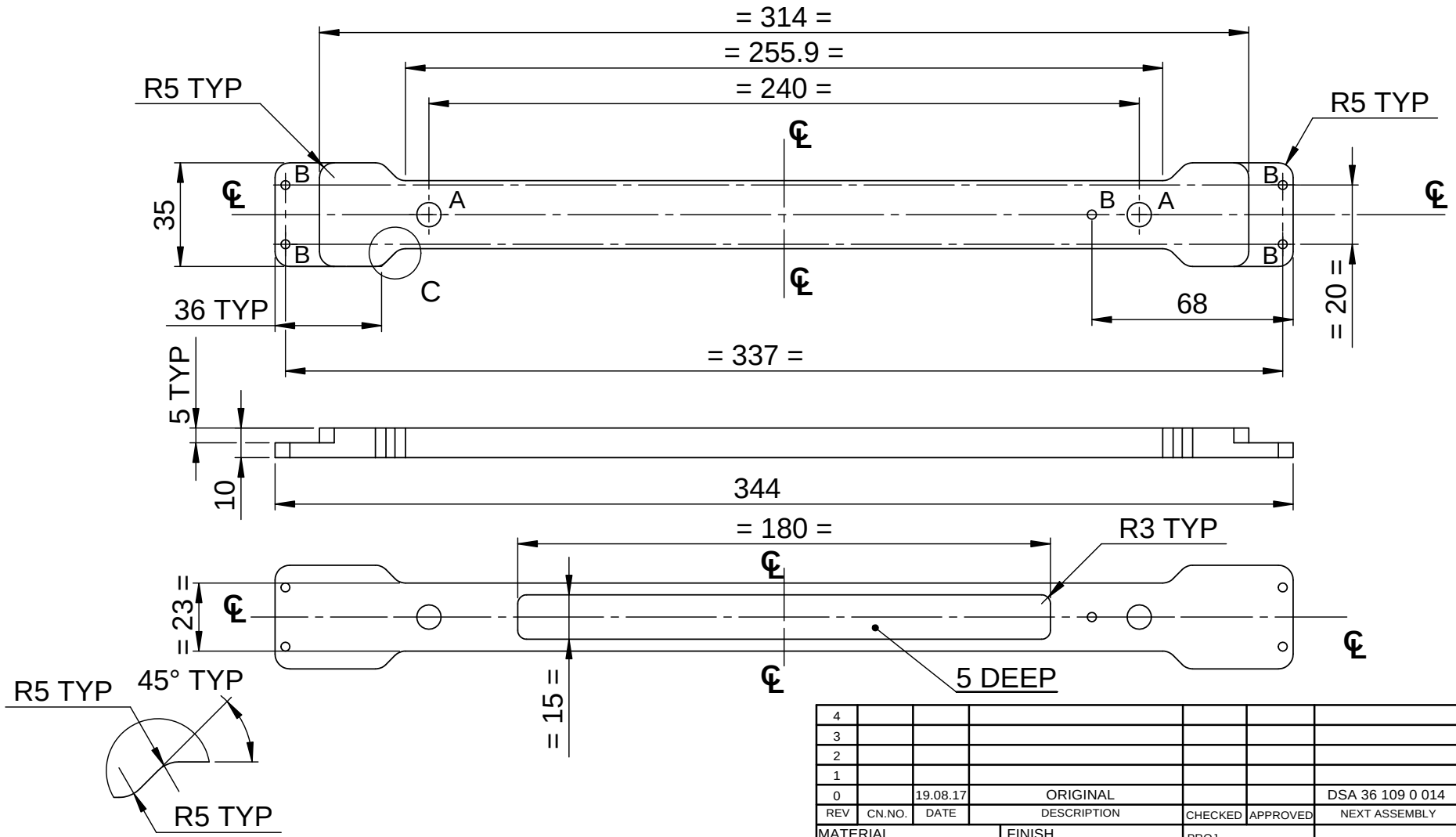

DETAIL C

SL NO	REF	DESCRIPTION	QTY
1	A	∅8.2	2
2	B	DRILL ∅3.1 AND M3 HELICOIL TAP	5

REV	CN.NO.	DATE	DESCRIPTION	CHECKED	APPROVED	NEXT ASSEMBLY	ITEM	QTY
4								
3								
2								
1								
0		19.08.17	ORIGINAL			DSA 36 109 0 014	4	2

MATERIAL: ALUMINIUM HE-30
FINISH: YELLOW CC COATING
PROJ.
TOL.GEN. ± IS: 2102
TOL.AXIS. ± (MED.)
PRJ. 109

DRAWN: MALIKSAD | CHECKED | APPROVED | DIMNS: mm | SCALE: NTS
TITLE: STIFFENER- SHOCK MOUNT
DATE 19.08.17 | DATE | DATE

KERALA STATE ELECTRONICS DEVELOPMENT CORPORATION LIMITED

DRG. NUMBER: DPD 36 109 0 130

SIZE: A4 | ISSUE: 1
NO.OF SHEETS: 1 / 1

RESTRICTED

RESTRICTED

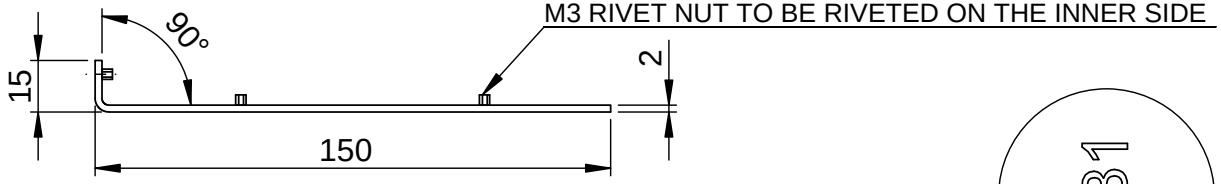

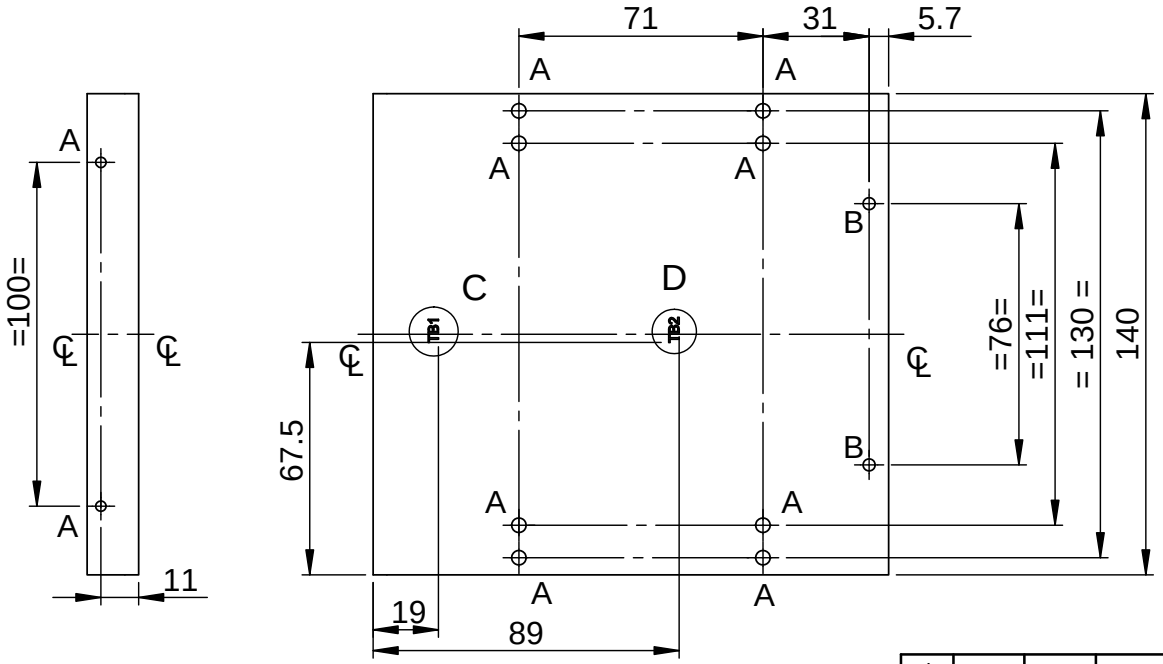

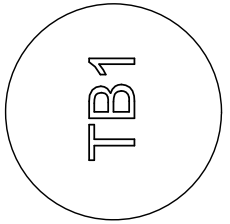

DETAIL C

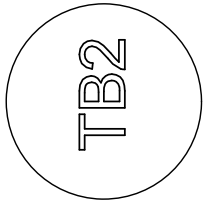

DETAIL D

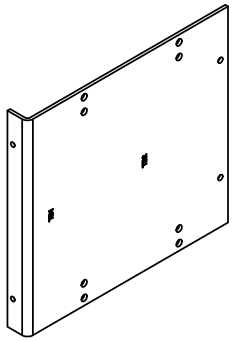

NOTE

1. AVOID SHARP CORNERS AND EDGES
2. 3x0.5⇩ TEXT TO BE ENGRAVED AND FILLED WITH BLACK PAINT

SL NO	REF	DESCRIPTION	QTY
1	A	M3 RIVET NUT	10
2	B	∅3.5	2

REV	CN.NO.	DATE	DESCRIPTION	CHECKED	APPROVED	NEXT ASSEMBLY	ITEM	QTY
4								
3								
2								
1								
0		03.12.17	ORIGINAL			DSA 36 109 0 017	4	1

MATERIAL: ALUMINIUM H32-5052	FINISH: YELLOW CC COATING	PROJ.	TOL.GEN. ± / TOL.AXIS. ± IS: 2102 (MED.)	PRJ. 109	
DRAWN: MALIKSAD	CHECKED	APPROVED	DIMNS: mm / SCALE: NTS	TITLE: TB MOUNTING PLATE	
DATE 03.12.17	DATE	DATE	DRG. NUMBER: DPD 36 109 0 084	SIZE: A4	ISSUE: 1
KERALA STATE ELECTRONICS DEVELOPMENT CORPORATION LIMITED				NO.OF SHEETS: 1 / 1	

RESTRICTED

RESTRICTED

RESTRICTED

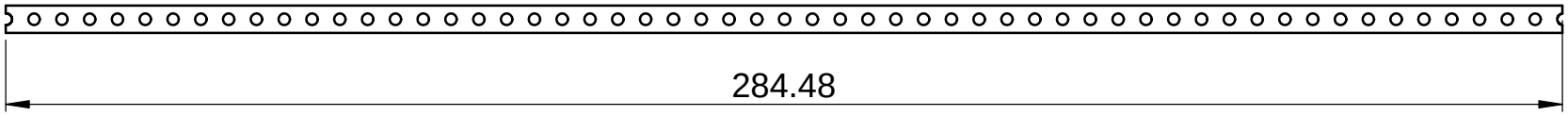

NOTE:

AVOID SHARP EDGES AND CORNERS

4								
3								
2								
1								
0		24.08.19	ORIGINAL			DSA 36 109 0 012	38	4
REV	CN.NO.	DATE	DESCRIPTION	CHECKED	APPROVED	NEXT ASSEMBLY	ITEM	QTY

MATERIAL STANDARD ITEM SCHROFF PART NO:34561-363	FINISH -	PROJ.	TOL.GEN. ± IS: 2102 TOL.AXIS. ± (MED.)	PRJ. 109		
DRAWN MALIKSAD	CHECKED	APPROVED	DIMNS mm	SCALE NTS	TITLE THREADED INSERT-BOTTOM CARD CAGE	
DATE 24.08.19	DATE	DATE	DRG. NUMBER DPD 36 109 0 233		SIZE A4	ISSUE 1
KERALA STATE ELECTRONICS DEVELOPMENT CORPORATION LIMITED					NO.OF SHEETS 1 / 1	

RESTRICTED

RESTRICTED

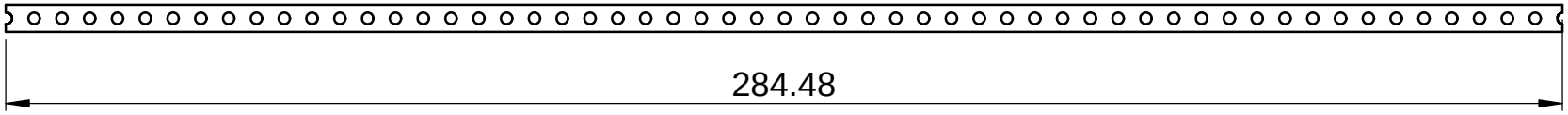

NOTE:

AVOID SHARP EDGES AND CORNERS

REV	CN.NO.	DATE	DESCRIPTION	CHECKED	APPROVED	NEXT ASSEMBLY	ITEM	QTY
4								
3								
2								
1								
0		24.08.19	ORIGINAL			DSA 36 109 0 013	33	4

MATERIAL: STANDARD ITEM SCHROFF PART NO:34561-363	FINISH: -	PROJ.	TOL.GEN. ± IS: 2102 TOL.AXIS. ± (MED.)	PRJ.	109
DRAWN: MALIKSAD	CHECKED	APPROVED	DIMNS: mm / SCALE: NTS	TITLE: THREADED INSERT-TOP CARD CAGE	
DATE 24.08.19	DATE	DATE	DRG. NUMBER: DPD 36 109 0 235	SIZE: A4	ISSUE: 1
KERALA STATE ELECTRONICS DEVELOPMENT CORPORATION LIMITED				NO.OF SHEETS: 1 / 1	

RESTRICTED

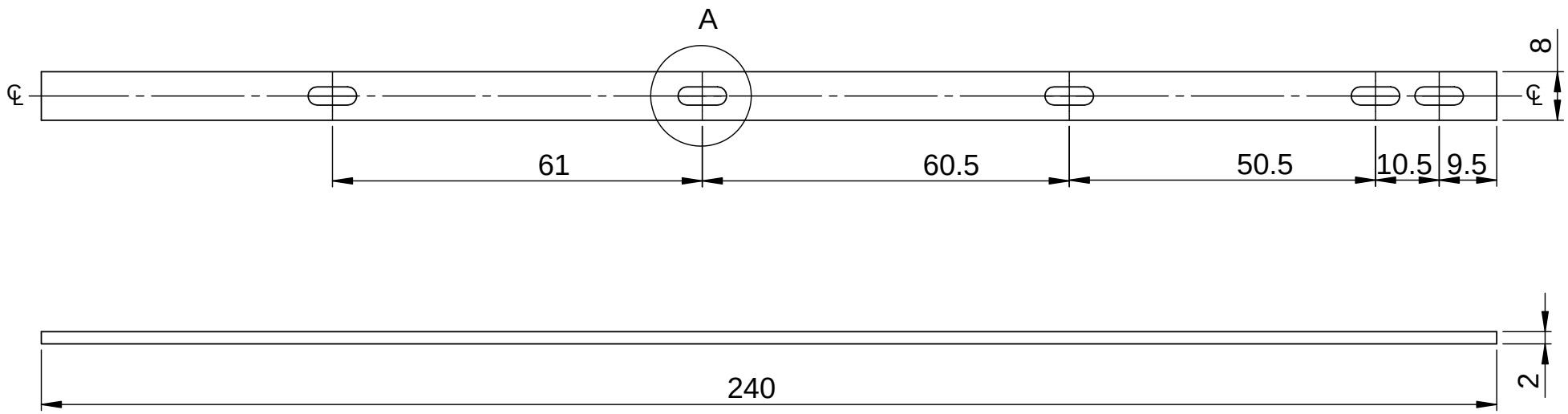

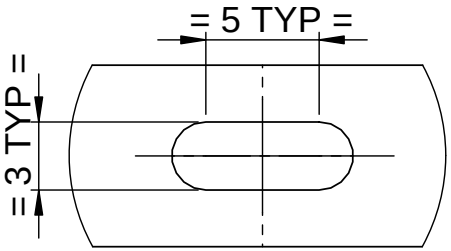

DETAIL A

REV	CN.NO.	DATE	DESCRIPTION	CHECKED	APPROVED	NEXT ASSEMBLY	ITEM	QTY
4								
3								
2								
1								
0		10.11.16	ORIGINAL					

MATERIAL: 2mm ALUMINIUM SHEET	FINISH: WHITE ANODISIND	PROJ.	TOL.GEN. ± IS: 2102 TOL.AXIS. ± (MED.)	PRJ. 109	
DRAWN: MALIKSAD	CHECKED	APPROVED	DIMNS: mm / SCALE: NTS	TITLE: TOP BACK PLAIN PCB SPACER STRIP	
DATE 10.11.16	DATE	DATE	DRG. NUMBER: DPD 36 109 0 223	SIZE: A4	ISSUE: 1
KERALA STATE ELECTRONICS DEVELOPMENT CORPORATION LIMITED				NO.OF SHEETS: 1 / 1	

RESTRICTED

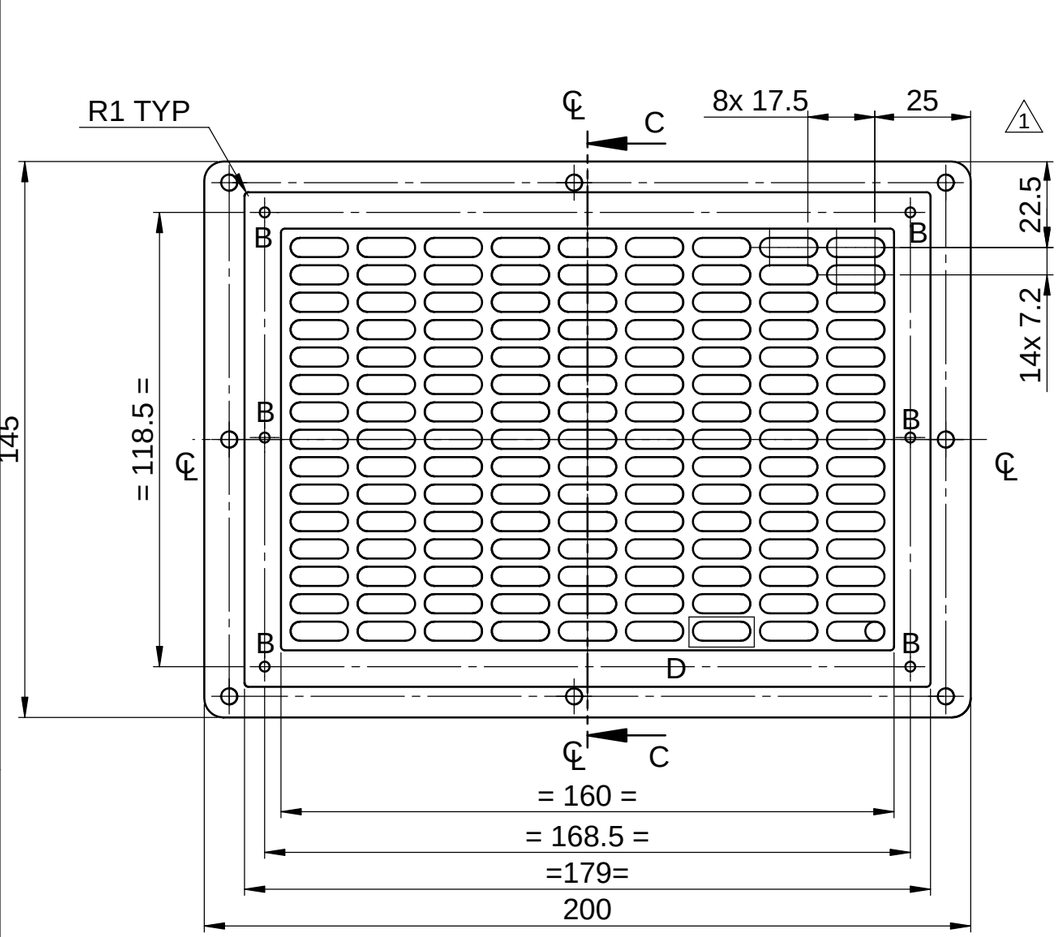

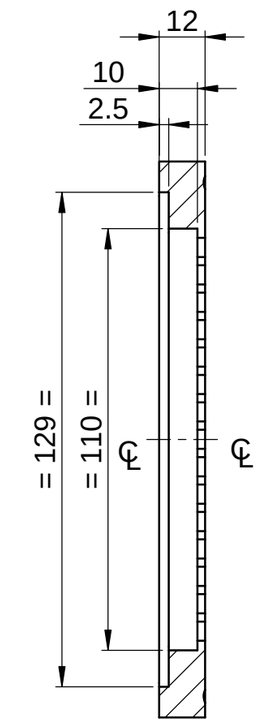

SECTION C-C

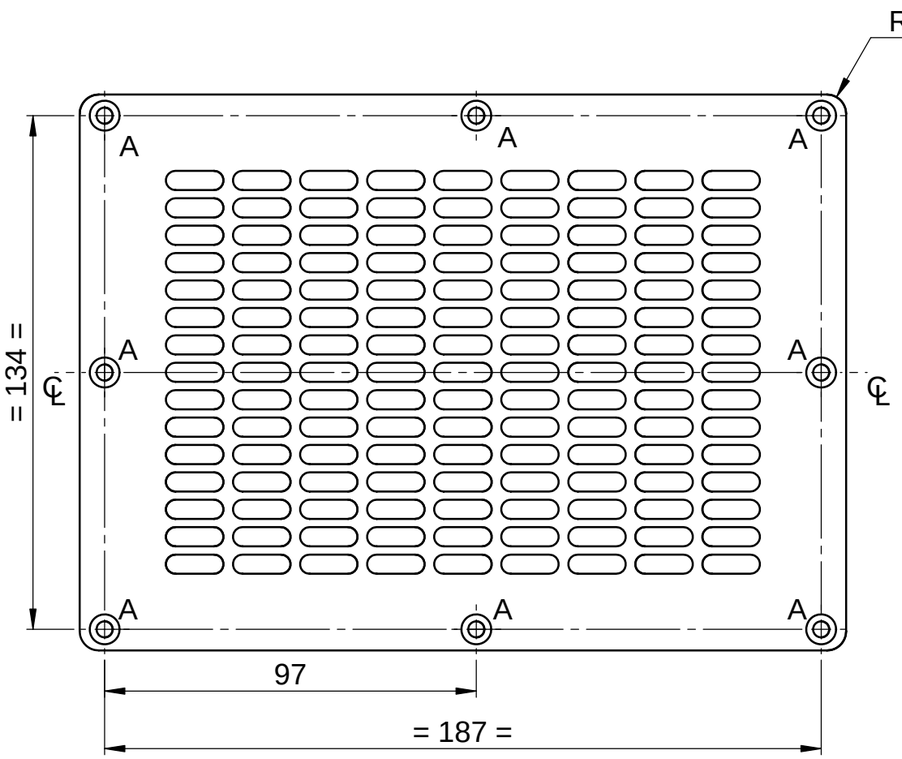

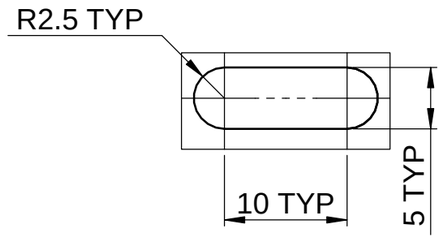

DETAIL D

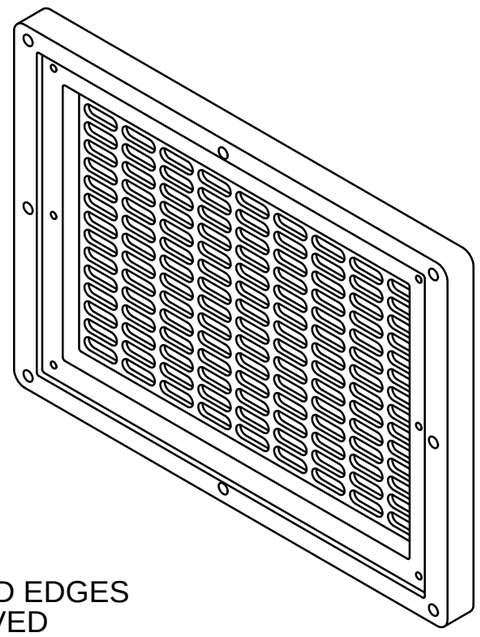

SL NO	REF	DESCRIPTION	QTY
1	A	∅4.2 ⌵ ∅7.8	8
2	B	DRILL ∅ 2.6x7 DEEP AND M2.5 HELICOIL TAP	6

REV	CN.NO.	DATE	DESCRIPTION	CHECKED	APPROVED	NEXT ASSEMBLY	ITEM	QTY
4								
3								
2								
1		22.08.19	ORIGINAL					
0		19.08.17	ORIGINAL			DSA 36 109 0 018	3	1

MATERIAL: ALUMINIUM HE-30	FINISH: YELLOW CC COATING	PROJ.	TOL.GEN. ± IS:2102 TOL.AXIS. ± (MED)	PRJ. 109	
DRAWN: MALIKSAD	CHECKED	APPROVED	DIMNS: mm	SCALE: NTS	TITLE: TOP BLOWER HOLDER
DATE 22.08.19	DATE	DATE	DRG. NUMBER: DPD 36 109 0 073	SIZE: A3	ISSUE: 1
KERALA STATE ELECTRONICS DEVELOPMENT CORPORATION LIMITED.				NO.OF SHEETS: 1 / 1	

NOTE

1. AVOID SHARP CORNERS AND EDGES
2. ALL BURRS MUST BE REMOVED

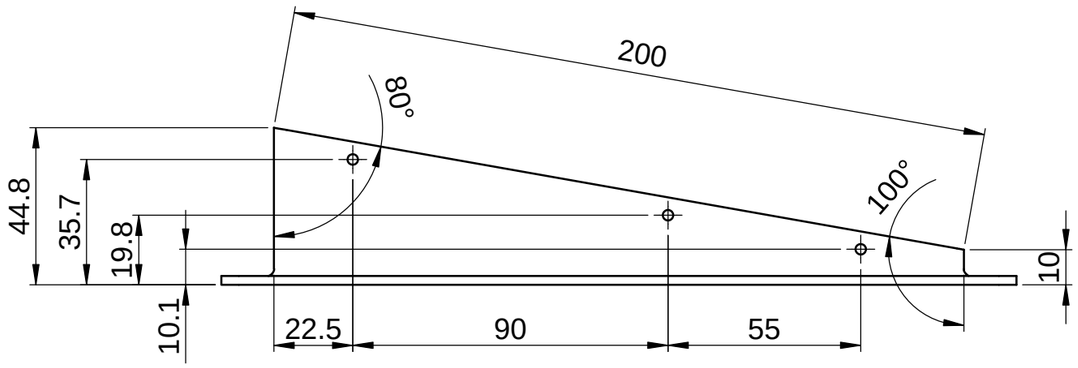

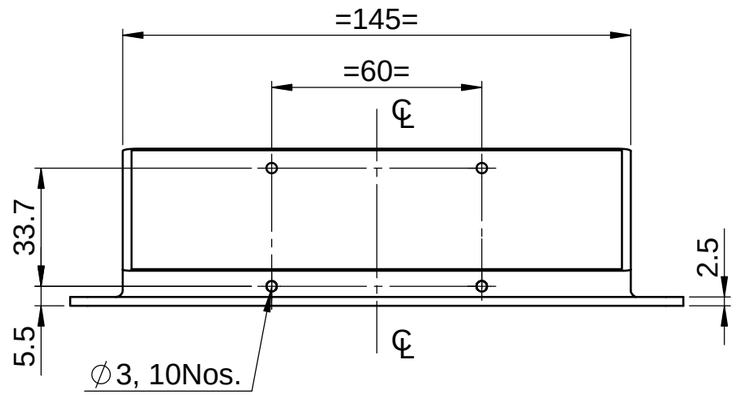

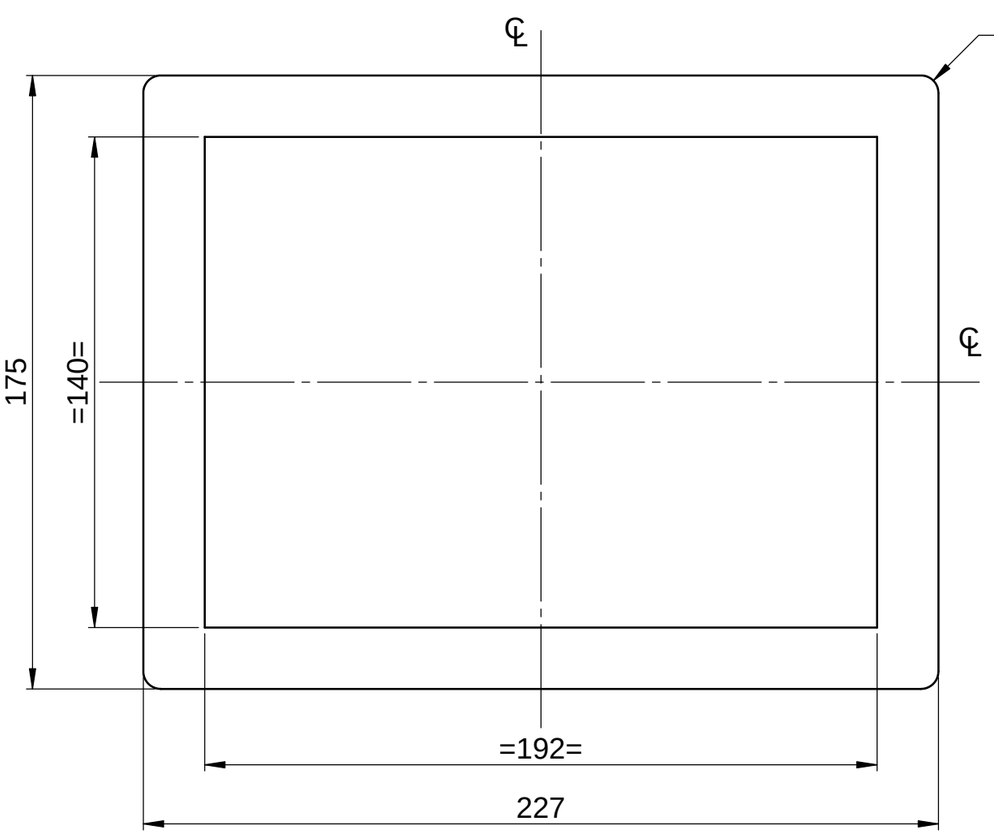

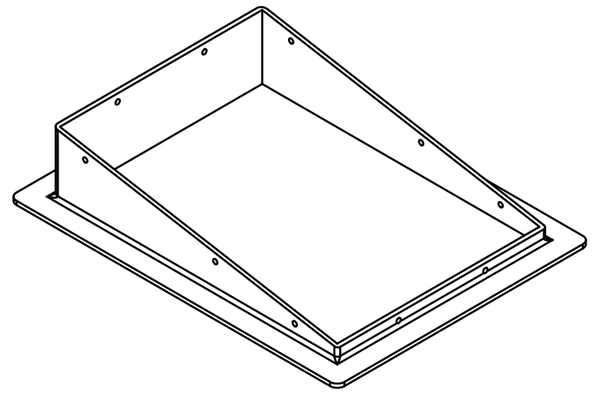

NOTE

1. AVOID SHARP CORNERS AND EDGES
2. ALL BURRS MUST BE REMOVED

REV	CN.NO.	DATE	DESCRIPTION	CHECKED	APPROVED	NEXT ASSEMBLY	ITEM	QTY
4								
3								
2								
1								
0		19.08.16	ORIGINAL			DSA 36 109 0 018	7	1

MATERIAL: 2.5 mm ALUMINIUM SHEET 5052-H32	FINISH: YELLOW CC COATING	PROJ.	TOL.GEN. ± IS:2102 TOL.AXIS. ± (MED)	PRJ. 109	
DRAWN: THUSHANTH	CHECKED	APPROVED	DIMNS: mm	SCALE: NTS	TITLE: TOP FAN COVER
DATE 19.08.16	DATE	DATE	DRG. NUMBER: DPD 36 109 0 080	SIZE: A3	ISSUE: 1
KERALA STATE ELECTRONICS DEVELOPMENT CORPORATION LIMITED.				NO.OF SHEETS: 1 / 1	

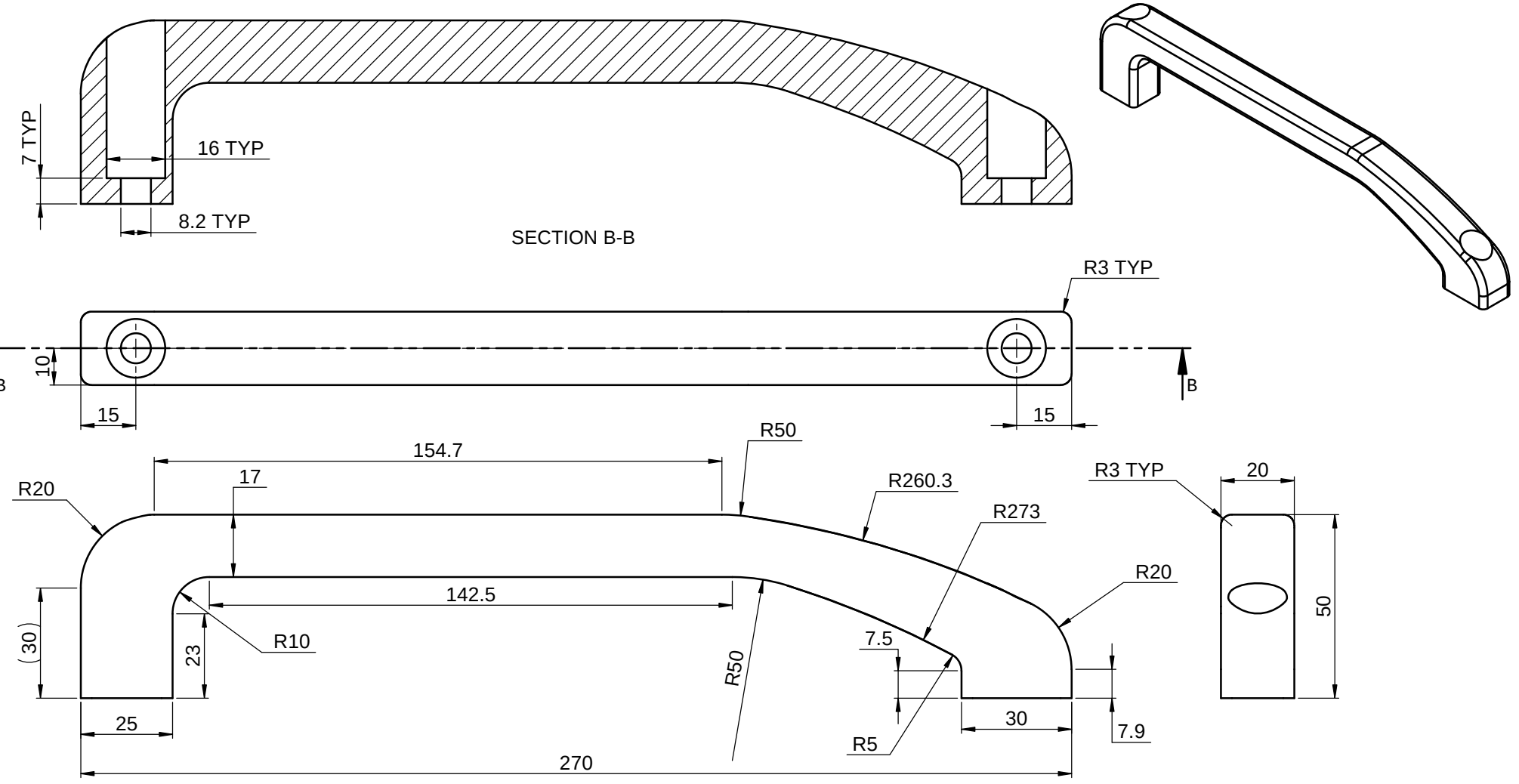

NOTE

1. AVOID SHARP CORNERS AND EDGES
2. ALL BURRS MUST BE REMOVED
3. DIMENSIONLESS FEATURES TO AS PER IGS FILE

REV	CN.NO.	DATE	DESCRIPTION	CHECKED	APPROVED	NEXT ASSEMBLY	ITEM	QTY
4								
3								
2								
1								
0		19.08.16	ORIGINAL			DSA 36 109 0 018	2	2

MATERIAL: ALUMINIUM HE-30	FINISH: YELLOW CC COATING	PROJ.	TOL.GEN. ± IS:2102 TOL.AXIS. ± (MED)	PRJ. 109	
DRAWN: THUSHANTH	CHECKED	APPROVED	DIMNS: mm	SCALE: NTS	TITLE: TOP HANDLE
DATE 19.08.16	DATE	DATE	DRG. NUMBER: DPD 36 109 0 076	SIZE: A3	ISSUE: 1
KERALA STATE ELECTRONICS DEVELOPMENT CORPORATION LIMITED				NO.OF SHEETS: 1 / 1	

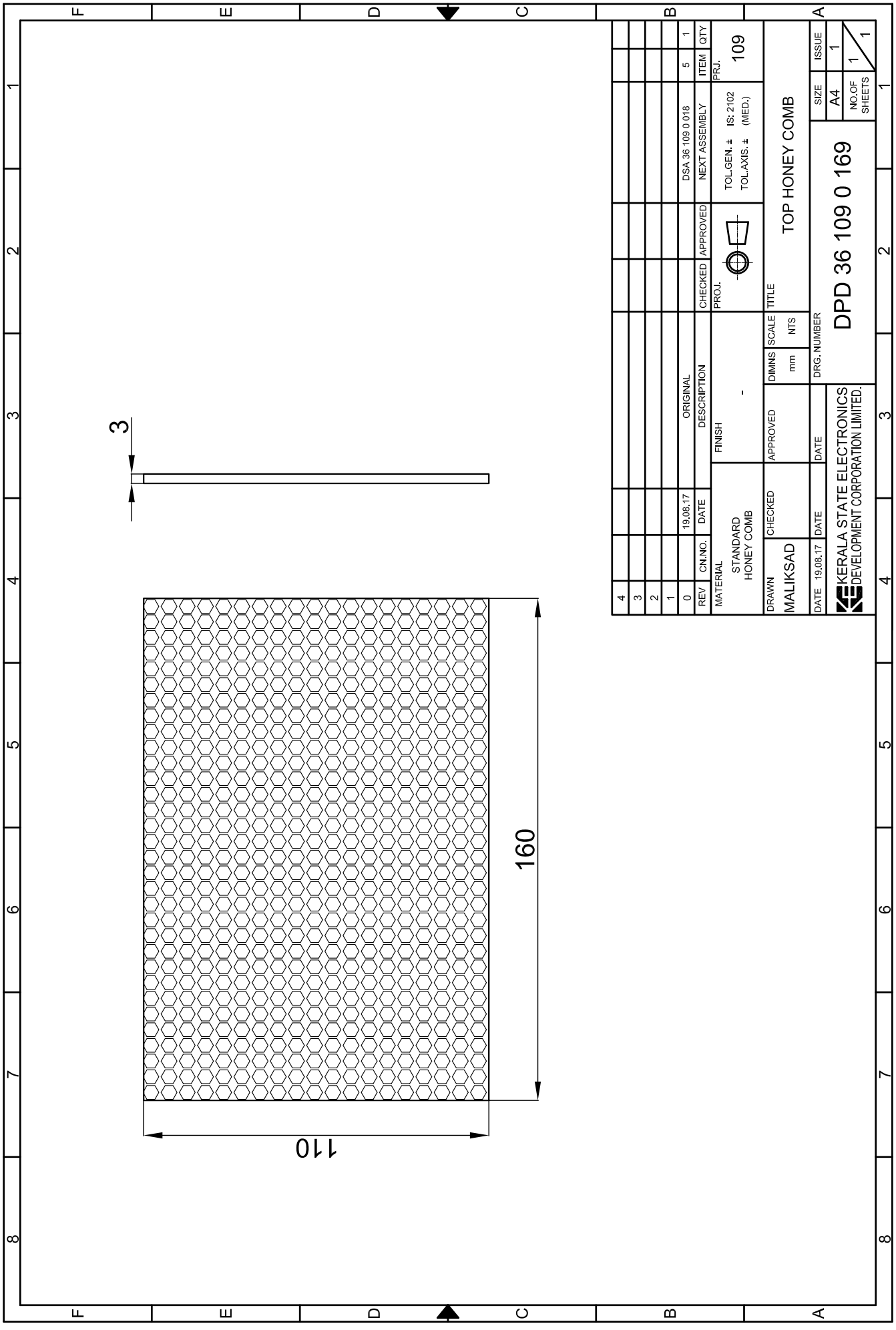
3
160
110
4
3
2
1
0
REV
CN.NO.
DATE
19.08.17
ORIGINAL
DESCRIPTION
CHECKED
APPROVED
DSA 36 109 0 018
NEXT ASSEMBLY
ITEM
5
QTY
1
PRJ.
109
TOL.GEN. ± IS: 2102
TOL.AXIS. ± (MED.)
PROJ.
MATERIAL
STANDARD
HONEY COMB
FINISH
-
DRAWN
MALIKSAD
DATE 19.08.17
CHECKED
DATE
APPROVED
DATE
DIMNS
mm
SCALE
NTS
TITLE
TOP HONEY COMB
DRG. NUMBER
DPD 36 109 0 169
KERALA STATE ELECTRONICS
DEVELOPMENT CORPORATION LIMITED.
SIZE
A4
ISSUE
1
NO.OF SHEETS
1
1

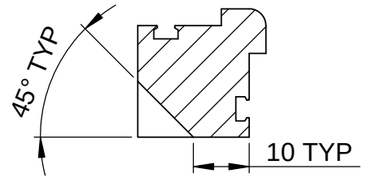

SECTION D-D

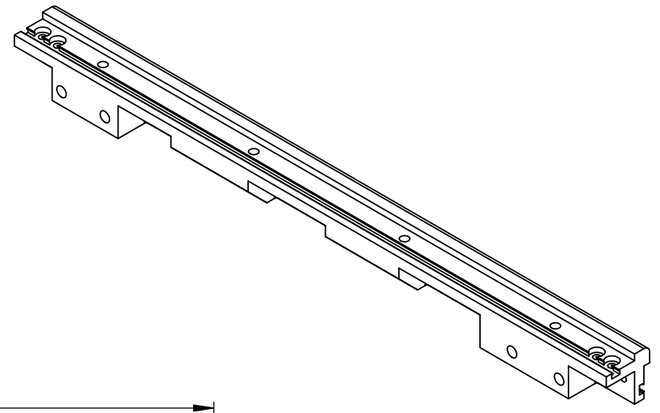

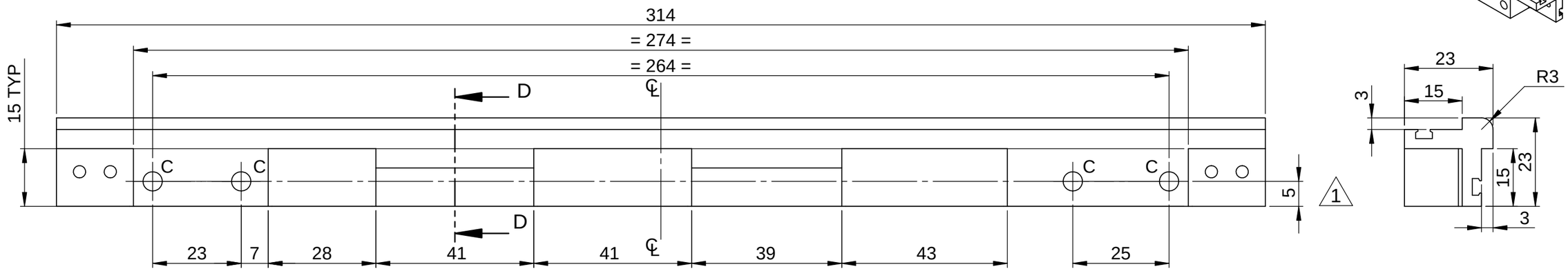

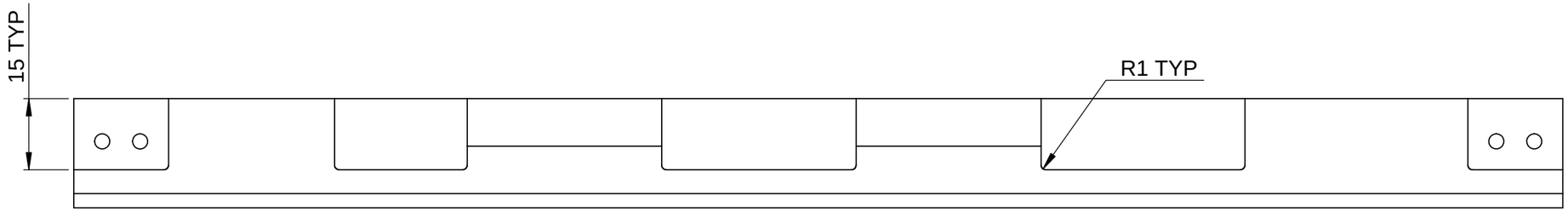

NOTE

1. AVOID SHARP CORNERS AND EDGES
2. ALL BURRS MUST BE REMOVED

SL NO	REF	DESCRIPTION	QTY
1	A	DRILL ∅3.2 ⌴ ∅6.2, ↧ 2.4	8
2	B	DRILL ∅4.1, ↧ 5 AND M4 HELICOIL TAP	7
3	C	DRILL ∅5.2, ↧15 AND M5 HELICOIL TAP	4

REV	CN.NO.	DATE	DESCRIPTION	CHECKED	APPROVED	NEXT ASSEMBLY	ITEM	QTY
4								
3								
2								
1		22.08.19	REVISED					
0		19.08.17	ORIGINAL			DSA 36 109 0 020	19	01

MATERIAL: ALUMINIUM HE-30	FINISH: YELLOW CC COATING	PROJ.	TOL.GEN. ± IS:2102 TOL.AXIS. ± (MED)	PRJ. 109	
DRAWN: MALIKSAD	CHECKED	APPROVED	DIMNS: mm	SCALE: NTS	TITLE: TOP LEFT DEPTH FRAME
DATE 22.08.19	DATE	DATE	DRG. NUMBER: DPD 36 109 0 105	SIZE: A3	ISSUE: 1
KERALA STATE ELECTRONICS DEVELOPMENT CORPORATION LIMITED.				NO.OF SHEETS: 1/2	

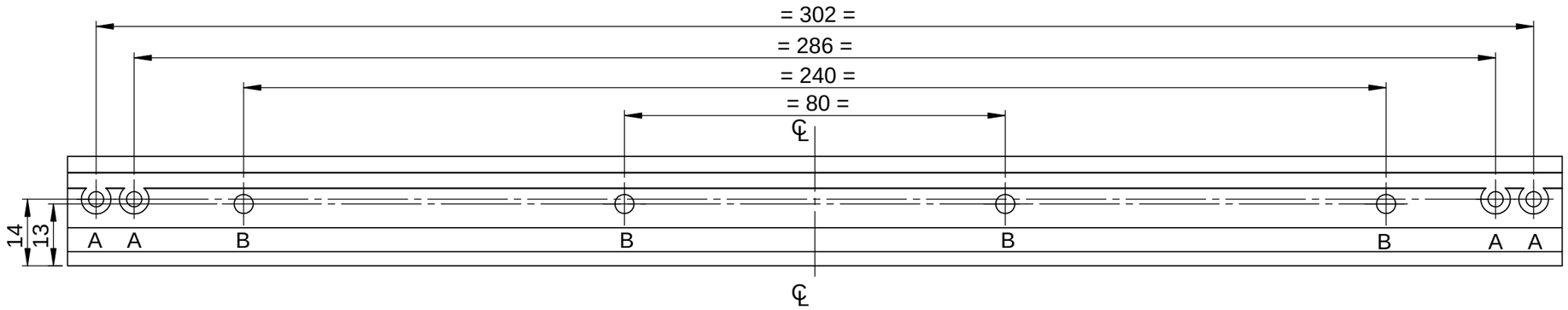

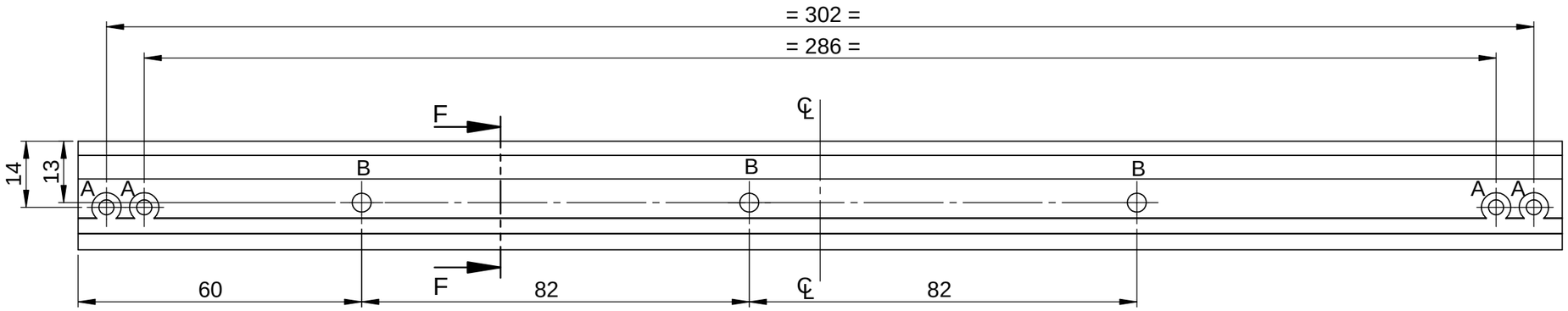

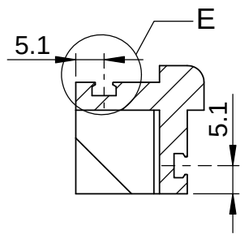

SECTION F-F

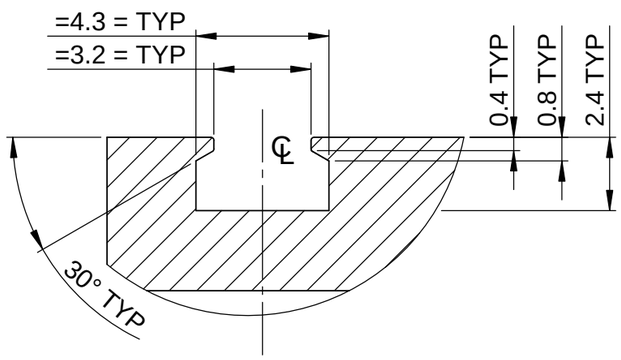

DETAIL E

REV	CN.NO.	DATE	DESCRIPTION	CHECKED	APPROVED	NEXT ASSEMBLY	ITEM	QTY
4								
3								
2								
1		22.08.19	REVISED					
0		19.08.17	ORIGINAL			DSA 36 109 0 020	19	01

MATERIAL	FINISH	PROJ.		PRJ.
ALUMINIUM HE-30	YELLOW CC COATING		TOL.GEN. ± IS:2102 TOL.AXIS. ± (MED)	109

DRAWN	CHECKED	APPROVED	DIMNS	SCALE	TITLE
MALIKSAD			mm	NTS	TOP LEFT DEPTH FRAME
DATE 22.08.19	DATE	DATE			

KERALA STATE ELECTRONICS DEVELOPMENT CORPORATION LIMITED

DRG. NUMBER: DPD 36 109 0 105

SIZE	ISSUE
A3	1
NO.OF SHEETS	2 / 2

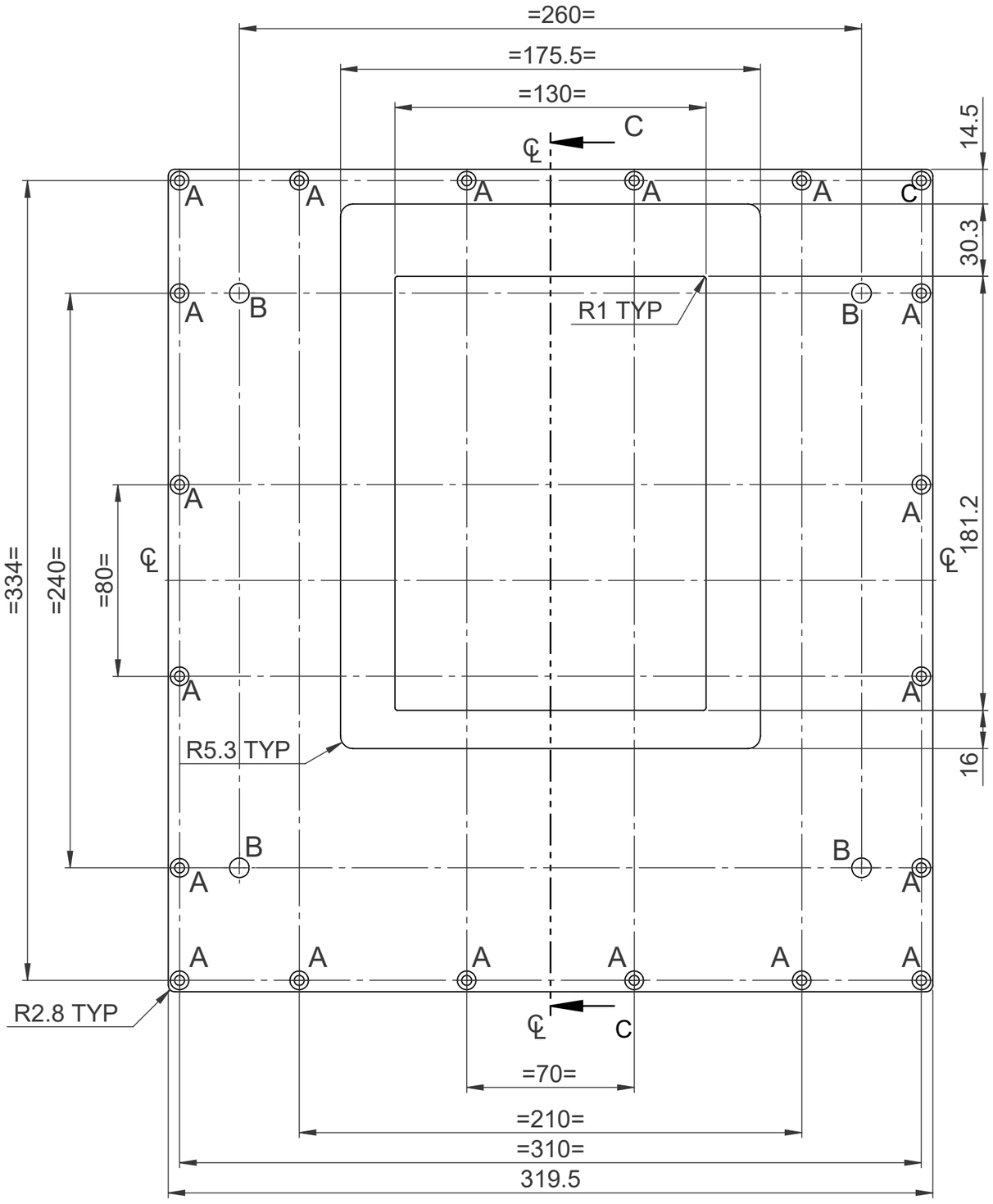

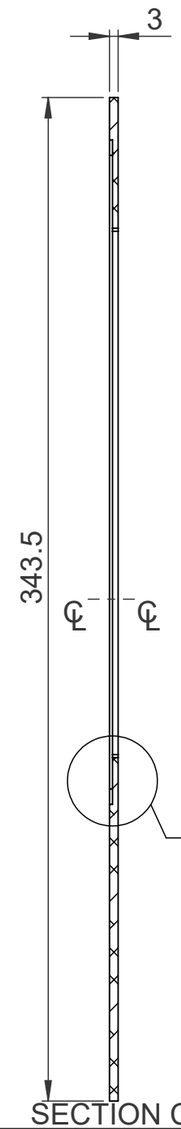

SECTION C-C

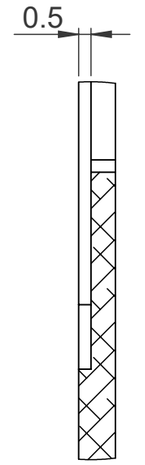

DETAIL D

SL NO	REF	DESCRIPTION	QTY
1	A	∅4.2 ⌵ ∅7.8	20
2	B	∅8.2	4

REV	CN.NO.	DATE	DESCRIPTION	CHECKED	APPROVED	NEXT ASSEMBLY	ITEM	QTY
4								
3								
2								
1	357	06.05.23	REVISED					
0		13.08.17	ORIGINAL			DSA 36 109 0 018	8	1

MATERIAL	FINISH	PROJ.		PRJ.
ALUMINIUM HE-30	YELLOW CC COATING		TOL.GEN. ± IS:2102 TOL.AXIS. ± (MED)	109

DRAWN	CHECKED	APPROVED	DIMNS	SCALE	TITLE
MALIKSAD			mm	NTS	TOP PLATE
DATE 13.08.17	DATE	DATE			

KERALA STATE ELECTRONICS DEVELOPMENT CORPORATION LIMITED

DRG. NUMBER: DPD 36 109 0 081

SIZE	ISSUE
A3	1
NO.OF SHEETS	1 / 2

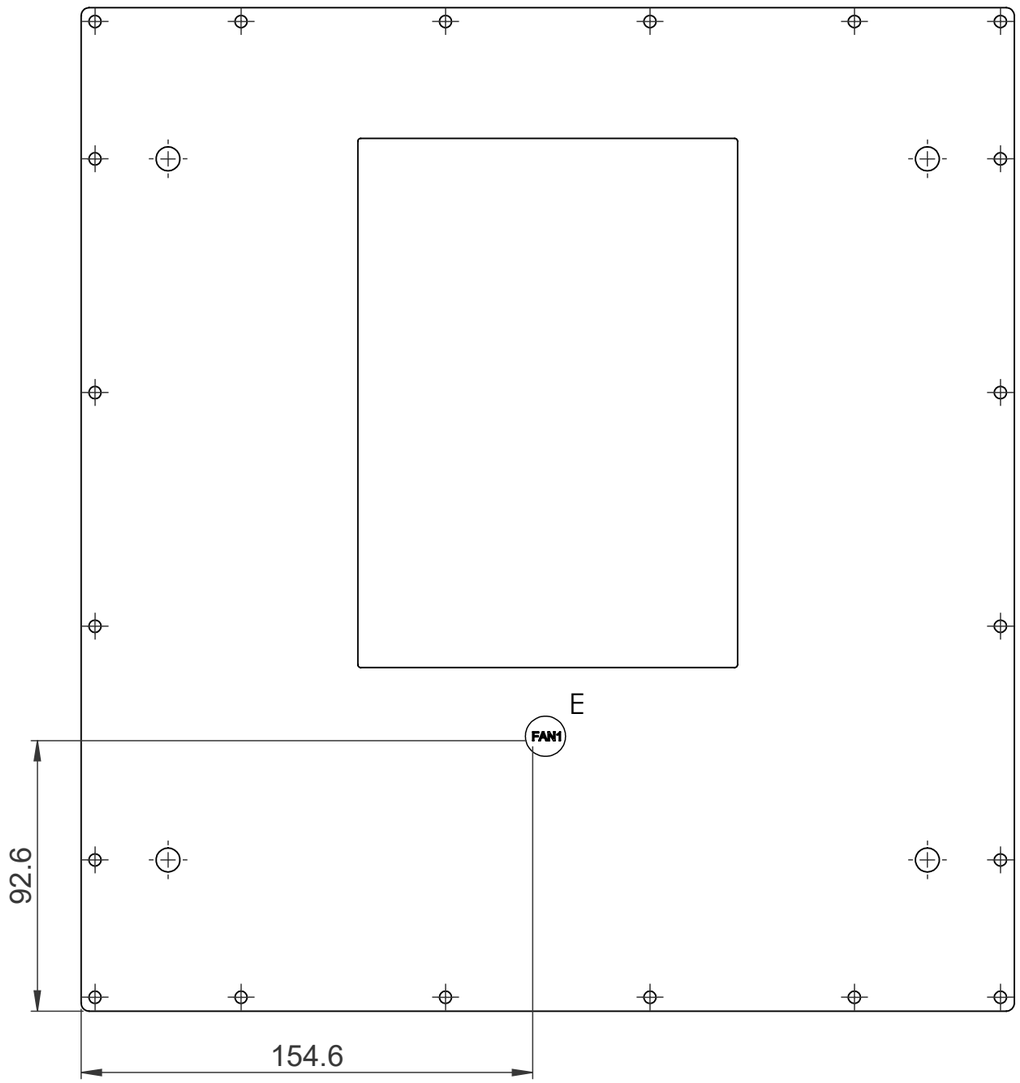

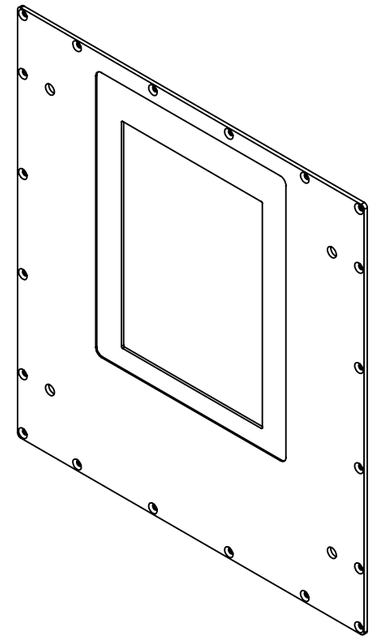

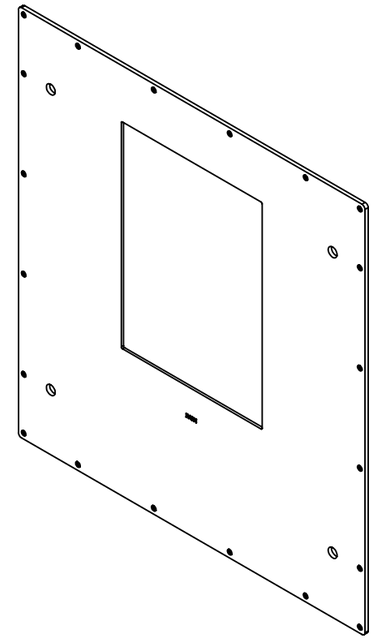

2

FAN1

DETAIL E

REV	CN.NO.	DATE	DESCRIPTION	CHECKED	APPROVED	NEXT ASSEMBLY	ITEM	QTY
4								
3								
2								
1	357	06.05.23	REVISED					
0		13.08.19	ORIGINAL			DSA 36 109 0 018	8	1

MATERIAL	FINISH	PROJ.		PRJ.
ALUMINIUM HE-30	YELLOW CC COATING		TOL.GEN. ± IS:2102 TOL.AXIS. ± (MED)	109

DRAWN	CHECKED	APPROVED	DIMNS	SCALE	TITLE
MALIKSAD			mm	NTS	TOP PLATE
DATE 13.08.17	DATE	DATE	DRG. NUMBER		SIZE / ISSUE
KERALA STATE ELECTRONICS DEVELOPMENT CORPORATION LIMITED			DPD 36 109 0 081		A3 / 1
					NO.OF SHEETS 2 / 2

NOTE

1. AVOID SHARP CORNERS AND EDGES
2. 3x0.5↓ TEXT TO BE ENGRAVED AND FILLED WITH BLACK PAINT

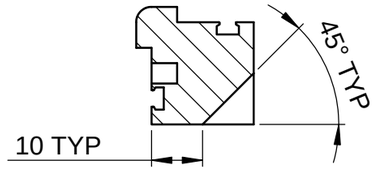

SECTION D-D

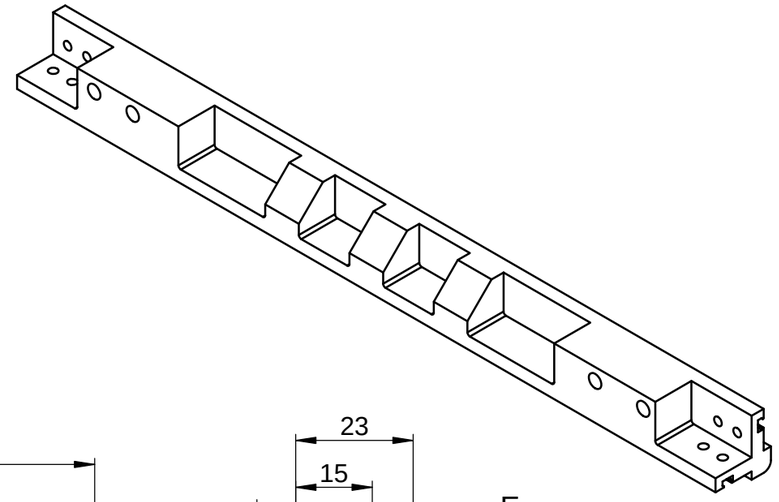

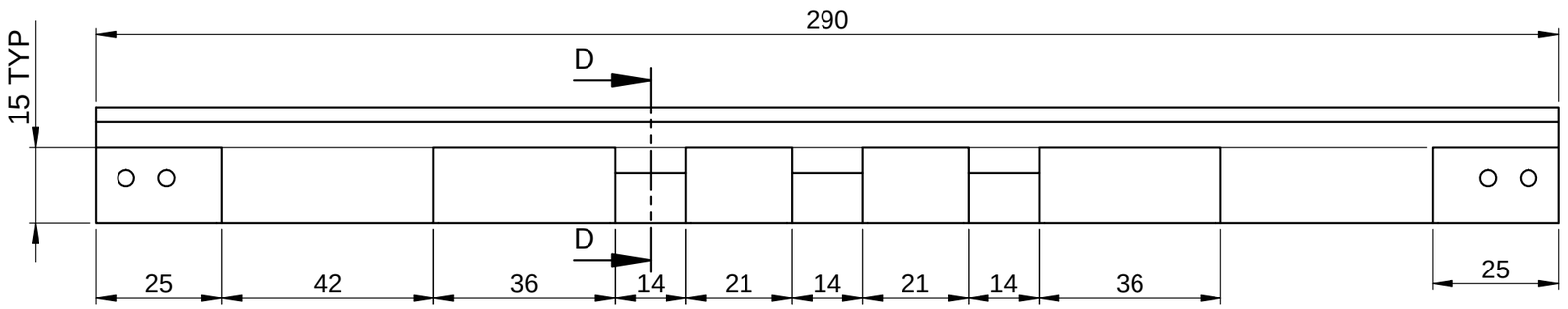

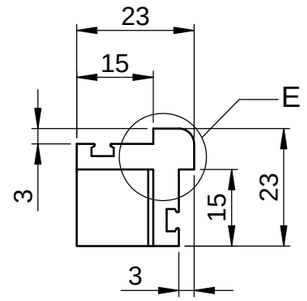

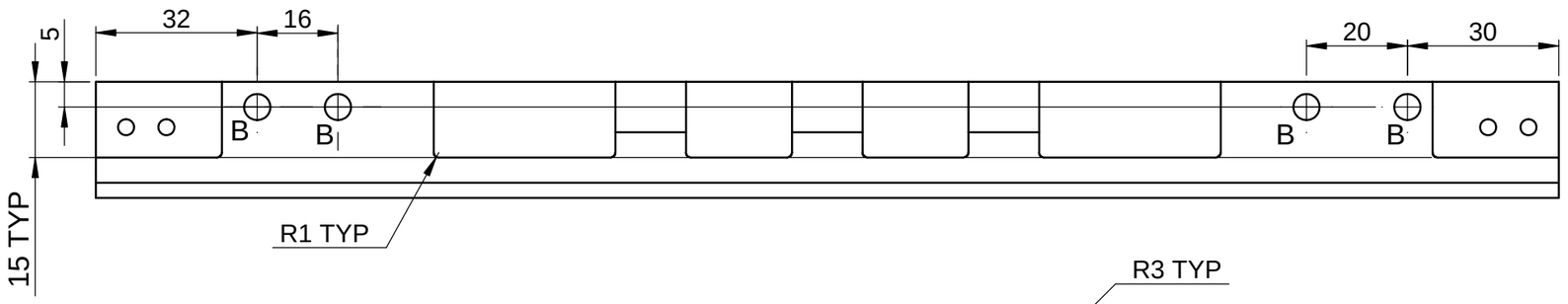

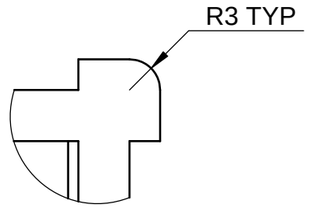

DETAIL E

NOTE

1. AVOID SHARP CORNERS AND EDGES
2. ALL BURRS MUST BE REMOVED

SL NO	REF	DESCRIPTION	QTY
1	A	DRILL ∅3.2 ⌴ ∅6.2↧2.4	8
2	B	DRILL ∅5.2, ↧15 AND M5 HELICOIL TAP	4
3	C	DRILL ∅4.2, ↧5 AND M4 HELICOIL TAP	7

REV	CN.NO.	DATE	DESCRIPTION	CHECKED	APPROVED	NEXT ASSEMBLY	ITEM	QTY
4								
3								
2								
1								
0		19.08.17	ORIGINAL			DSA 36 109 0 020	6	1

MATERIAL: ALUMINIUM HE-30	FINISH: YELOW CC COATING	PROJ.	TOL.GEN. ± IS:2102 TOL.AXIS. ± (MED)	PRJ. 109	
DRAWN: MALIKSAD	CHECKED	APPROVED	DIMNS: mm	SCALE: NTS	TITLE: TOP REAR HT FRAME
DATE 19.08.17	DATE	DATE	DRG. NUMBER: DPD 36 109 0 092	SIZE: A3	ISSUE: 1
KERALA STATE ELECTRONICS DEVELOPMENT CORPORATION LIMITED				NO.OF SHEETS: 1/2	

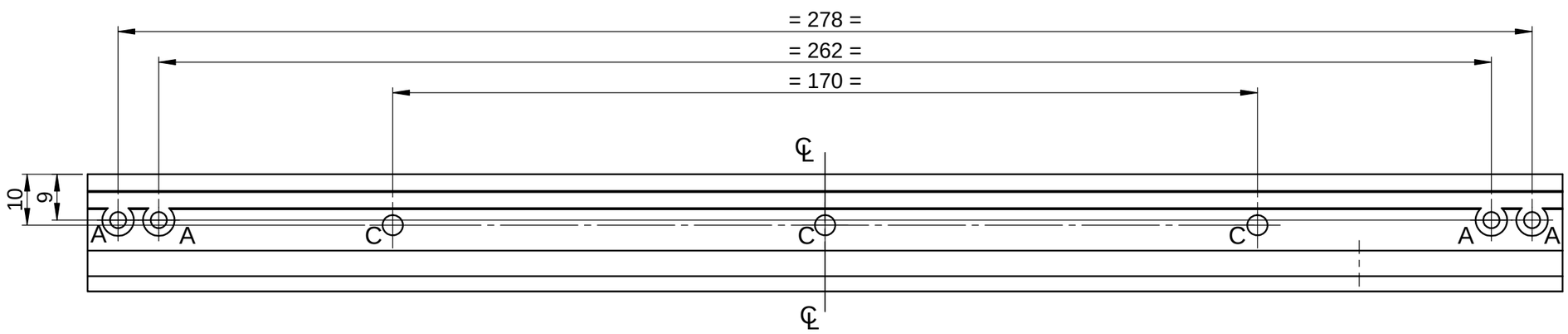

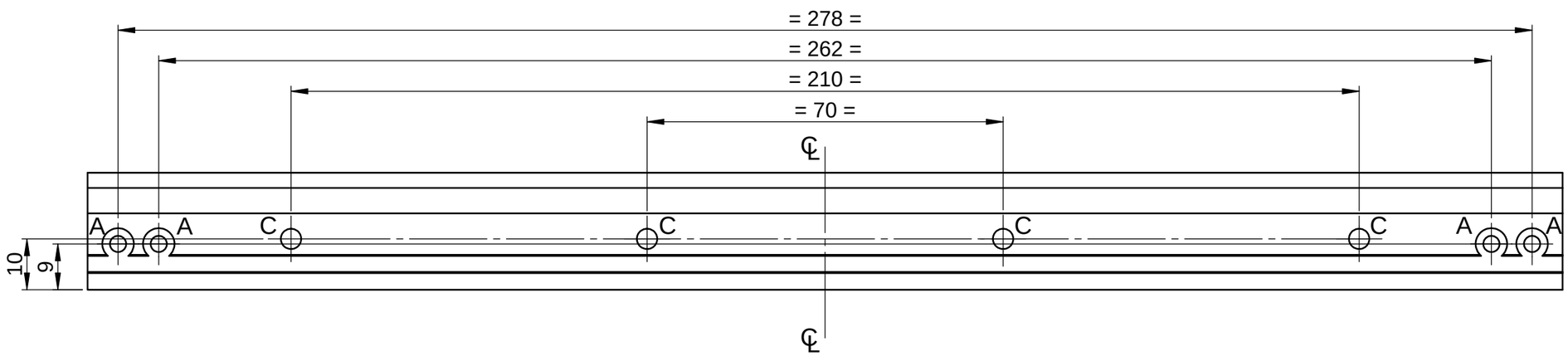

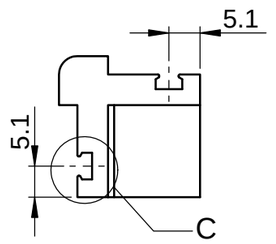

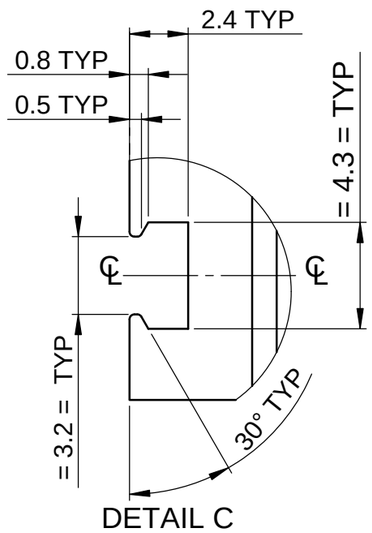

DETAIL C

REV	CN.NO.	DATE	DESCRIPTION	CHECKED	APPROVED	NEXT ASSEMBLY	ITEM	QTY
4								
3								
2								
1								
0		19.08.17	ORIGINAL			DSA 36 109 0 020	6	1

MATERIAL: ALUMINIUM HE-30	FINISH: YELLOW CC COATING	PROJ.	TOL.GEN. ± IS:2102 TOL.AXIS. ± (MED)	PRJ. 109	
DRAWN: MALIKSAD	CHECKED	APPROVED	DIMNS: mm	SCALE: NTS	TITLE: TOP REAR HT FRAME
DATE 19.08.17	DATE	DATE			

KERALA STATE ELECTRONICS DEVELOPMENT CORPORATION LIMITED.

DRG. NUMBER: DPD 36 109 0 092

SIZE	ISSUE
A3	1
NO.OF SHEETS	2 / 2

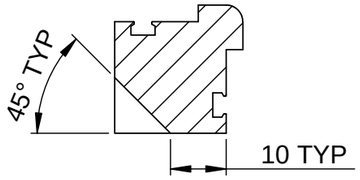

SECTION D-D

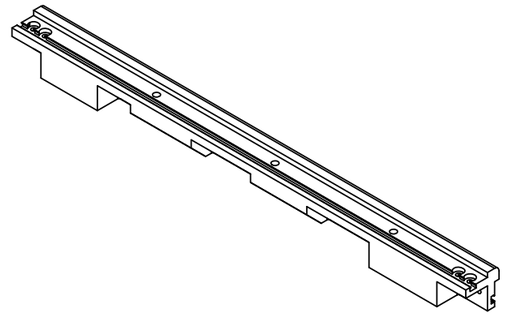

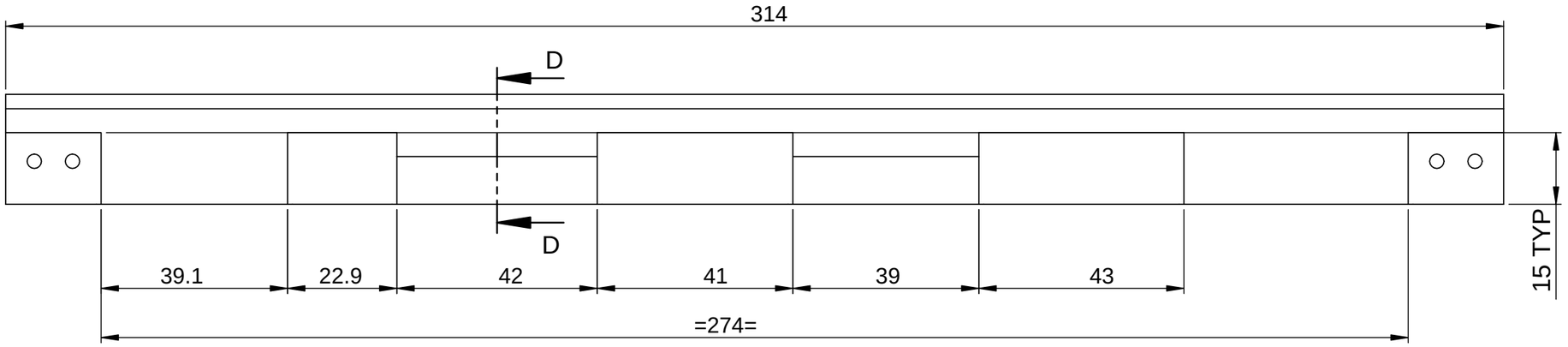

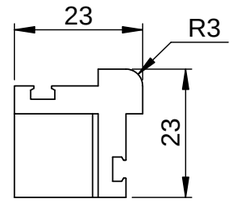

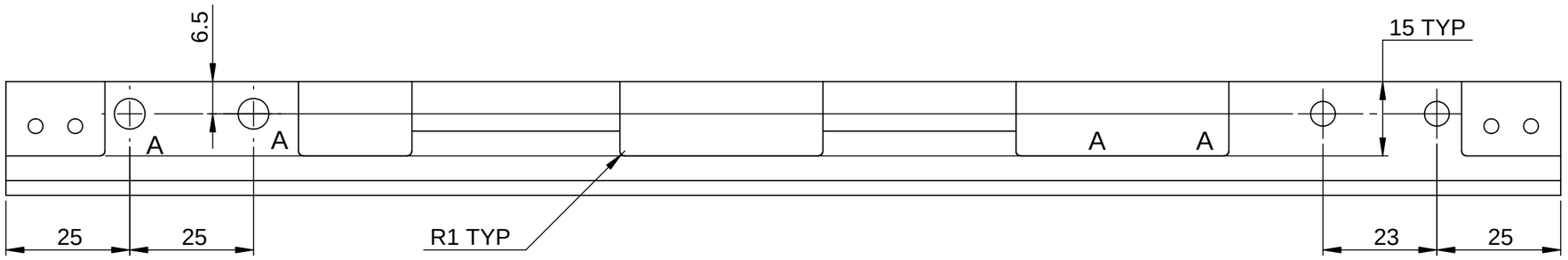

NOTE

1. AVOID SHARP CORNERS AND EDGES
2. ALL BURRS MUST BE REMOVED

SL NO	REF	DESCRIPTION	QTY
1	A	DRILL ⌀5.2, ↧15 AND M5 HELICOIL	4
2	B	DRILL ⌀3.2⌴ ⌀6.2↧2.4	8
3	C	DRILL ⌀4.1, ↧5 AND M4 HELICOIL	7

REV	CN.NO.	DATE	DESCRIPTION	CHECKED	APPROVED	NEXT ASSEMBLY	ITEM	QTY
4								
3								
2								
1								
0		19.08.17	ORIGINAL			DSA 36 109 0 020	5	1

MATERIAL: ALUMINIUM HE-30	FINISH: YELLOW CC COATING	PROJ.	TOL.GEN. ± IS:2102 TOL.AXIS. ± (MED)	PRJ. 109	
DRAWN: MALIKSAD	CHECKED	APPROVED	DIMNS: mm	SCALE: NTS	TITLE: TOP RIGHT DEPTH FRAME
DATE 19.08.17	DATE	DATE	DRG. NUMBER: DPD 36 109 0 091	SIZE: A3	ISSUE: 1
KERALA STATE ELECTRONICS DEVELOPMENT CORPORATION LIMITED.				NO.OF SHEETS: 1/2	

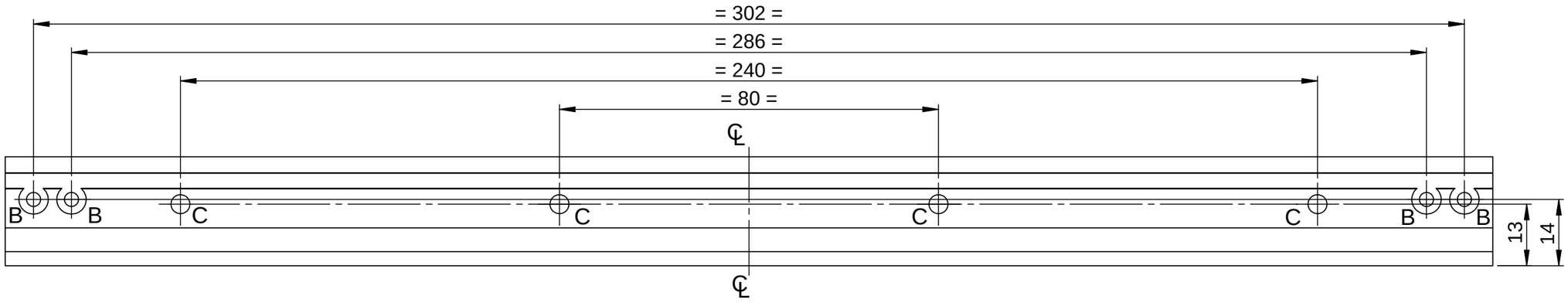

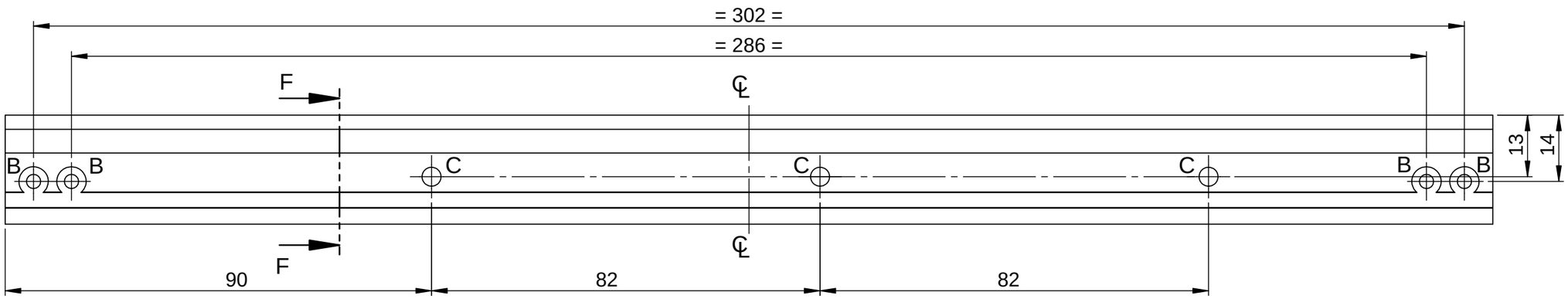

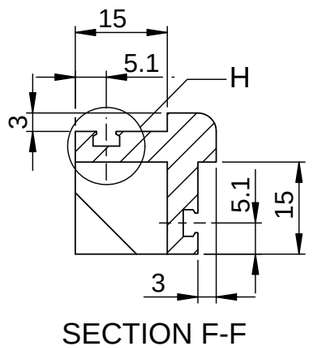

SECTION F-F

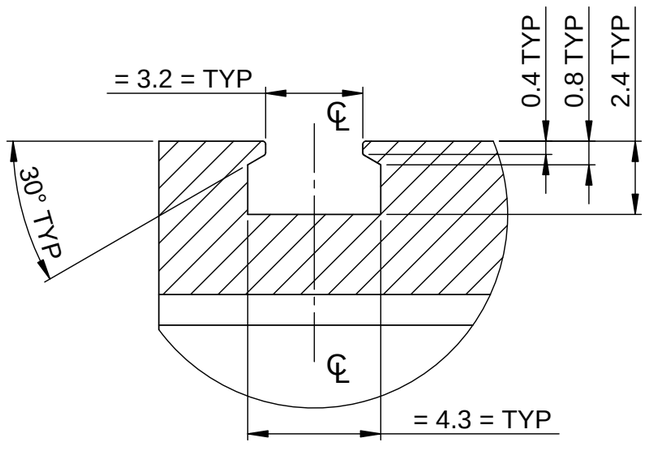

DETAIL H

REV	CN.NO.	DATE	DESCRIPTION	CHECKED	APPROVED	NEXT ASSEMBLY	ITEM	QTY
4								
3								
2								
1								
0		19.08.17	ORIGINAL			DSA 36 109 0 020	5	1

MATERIAL: ALUMINIUM HE-30	FINISH: YELLOW CC COATING	PROJ.	TOL.GEN. ± IS:2102 TOL.AXIS. ± (MED)	PRJ. 109	
DRAWN: MALIKSAD	CHECKED	APPROVED	DIMNS: mm / SCALE: NTS	TITLE: TOP RIGHT DEPTH FRAME	
DATE 19.08.17	DATE	DATE	DRG. NUMBER: DPD 36 109 0 091	SIZE: A3	ISSUE: 1
KERALA STATE ELECTRONICS DEVELOPMENT CORPORATION LIMITED.				NO.OF SHEETS: 2 / 2	

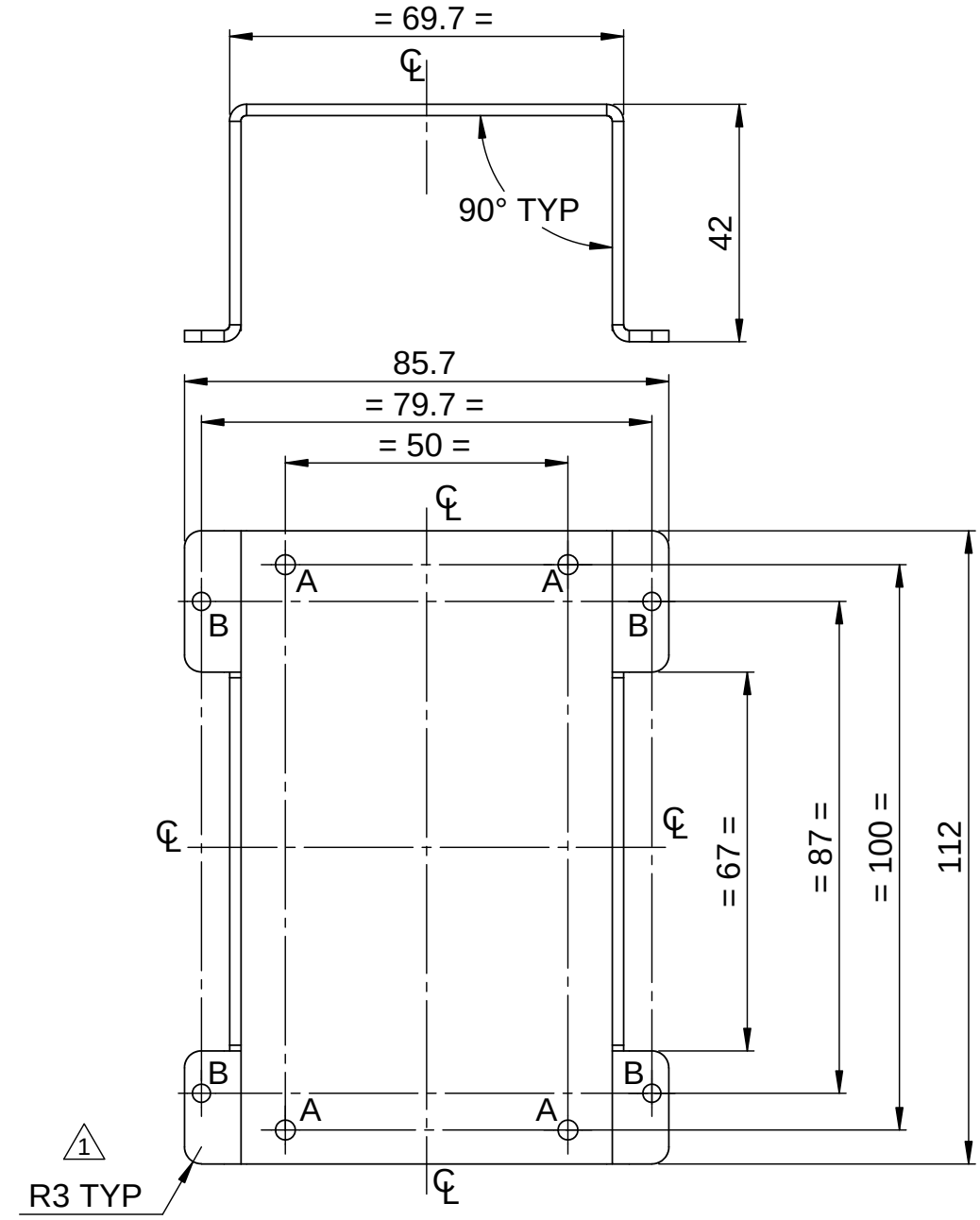

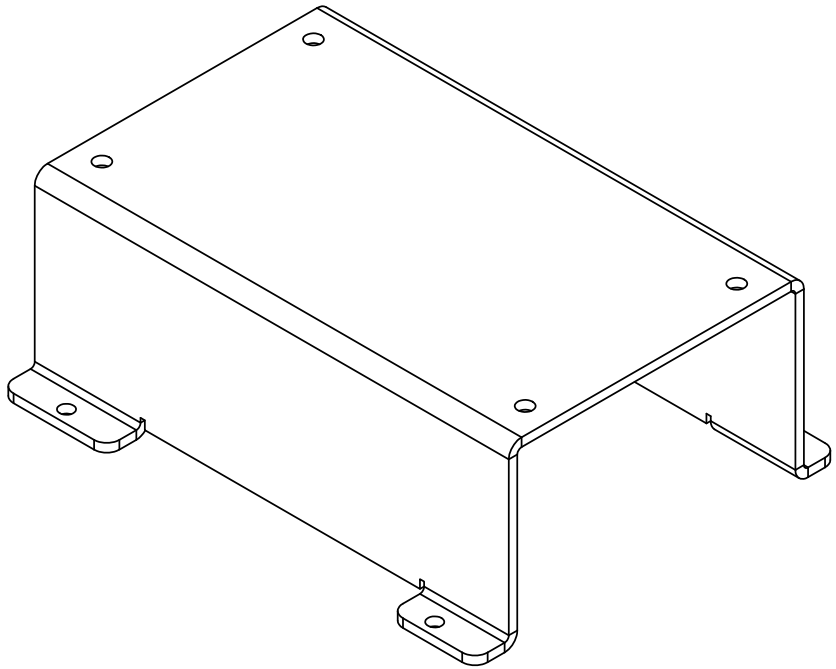

NOTE: AVOID SHARP CORNERS AND EDGES

SL NO	REF	DESCRIPTION	QTY
1	A	∅3.5	4
2	B	∅3.2	4

REV	CN.NO.	DATE	DESCRIPTION	CHECKED	APPROVED	NEXT ASSEMBLY	ITEM	QTY
4								
3								
2								
1		22.08.19	REVISED					
0		17.10.17	ORIGINAL			-	-	-

MATERIAL: ALUMINIUM H32-5052	FINISH: 25 MICRON BLACK ANODIZING	PROJ.	TOL.GEN. ± IS: 2102 TOL.AXIS. ± (MED.)	PRJ. 109	
DRAWN: MALIKSAD	CHECKED	APPROVED	DIMNS: mm	SCALE: NTS	TITLE: TRACO PS HOLDER
DATE: 22.08.19	DATE	DATE	DRG. NUMBER: DPD 36 109 0 271	SIZE: A4	ISSUE: 1
KERALA STATE ELECTRONICS DEVELOPMENT CORPORATION LIMITED				NO.OF SHEETS: 1 / 1	

RESTRICTED

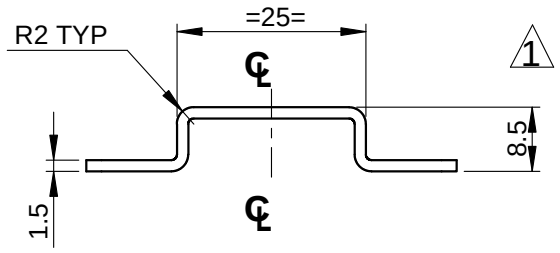

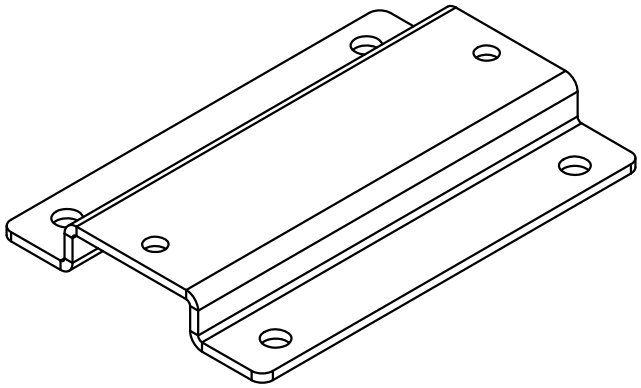

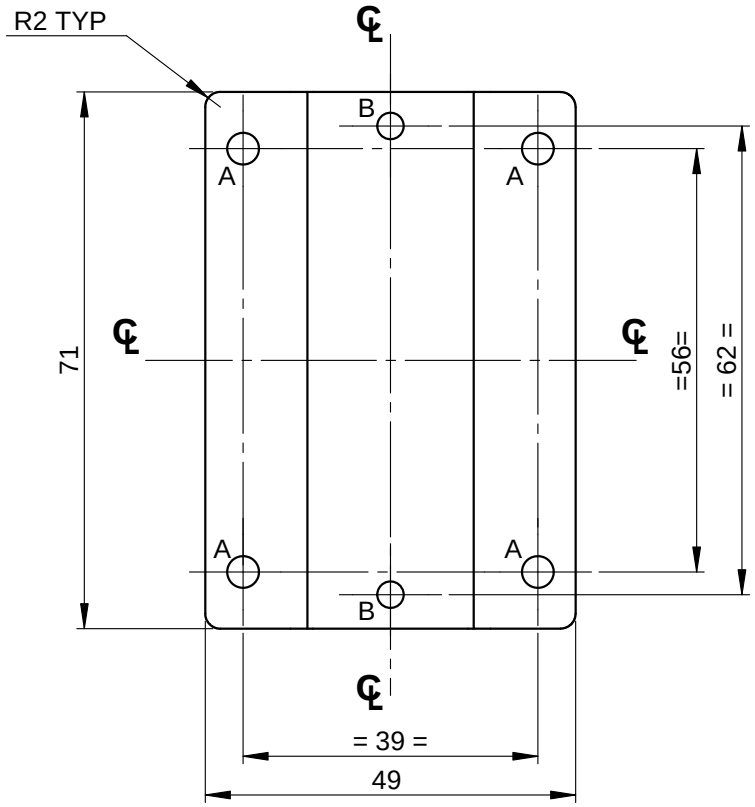

NOTE

AVOID SHARP CORNERS AND EDGES

SL NO	REF	DESCRIPTION	QTY
1	A	∅4.2	4
2	B	∅3.2	2

REV	CN.NO.	DATE	DESCRIPTION	CHECKED	APPROVED	NEXT ASSEMBLY	ITEM	QTY
4								
3								
2								
1		11.11.16	REVISED					
0		30.07.16	ORIGINAL			DSA 36 109 0 017	9	1

MATERIAL	FINISH	PROJ.	TOL.GEN. ± / TOL.AXIS. ±	PRJ.
ALUMINIUM H32-5052	25 MICRON BLACK ANODISING		IS: 2102 (MED.)	109

DRAWN	CHECKED	APPROVED	DIMNS	SCALE	TITLE
MALIKSAD			mm	NTS	TRANSFORMER BRACKET
DATE 16.01.16	DATE	DATE	DRG. NUMBER		SIZE / ISSUE
KERALA STATE ELECTRONICS DEVELOPMENT CORPORATION LIMITED			DPD 36 109 0 219		A4 / 1
					NO.OF SHEETS 1 / 1

RESTRICTED

RESTRICTED

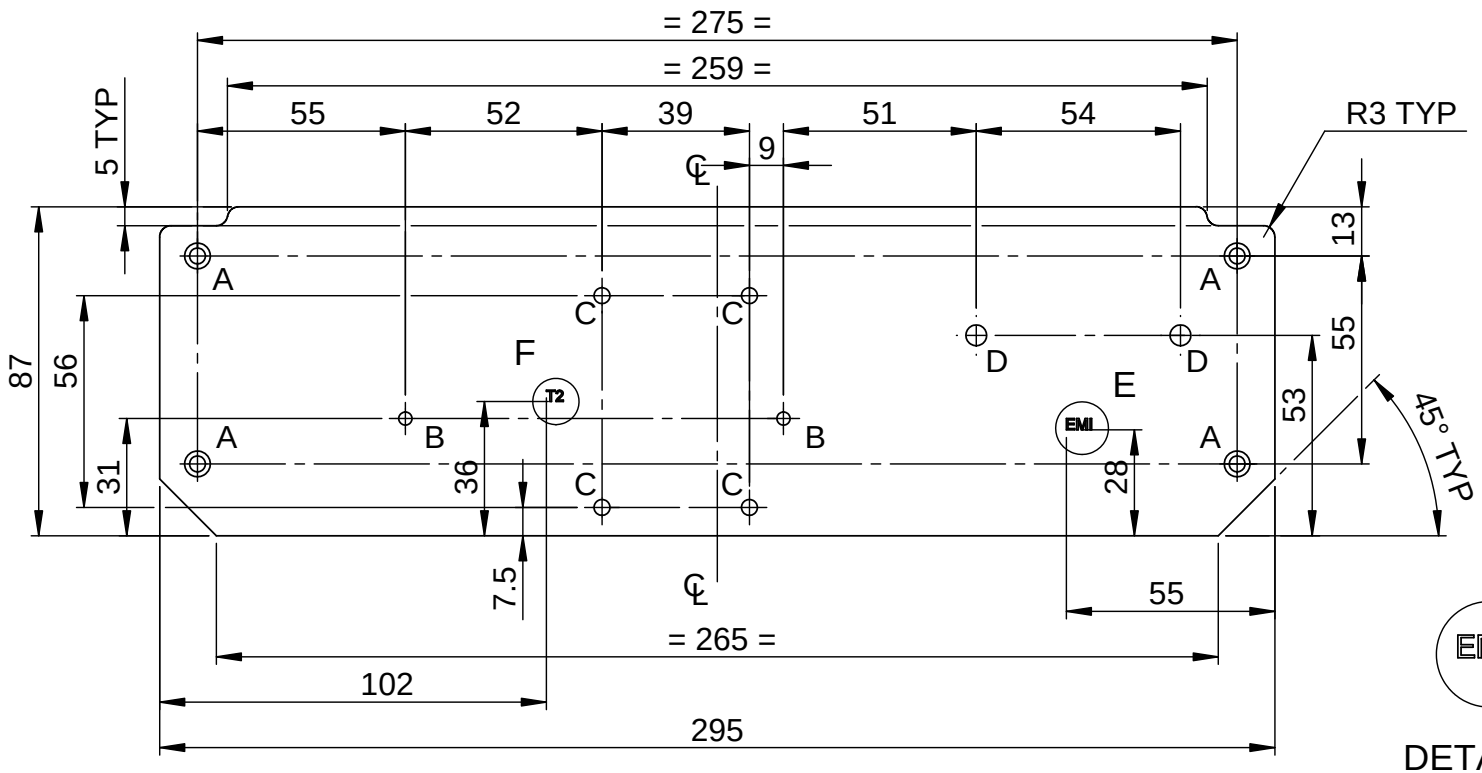

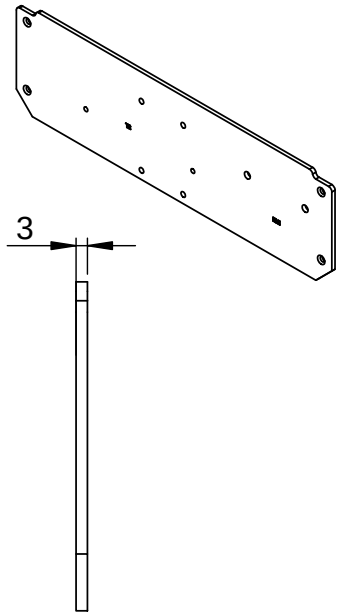

DETAIL E

DETAIL F

NOTE:

1. AVOID SHARP EDGES AND CORNERS
2. 3x0.5↧ TEXT TO BE ENGRAVED AND FILLED WITH BLACK PAINT

SLNO	REF	DESCRIPTION	QTY
1	A	DRILL ∅4.2 ⌵ ∅7.8	4
2	B	∅3.2	2
3	C	∅4.2	4
4	D	∅5.5	2

REV	CN.NO.	DATE	DESCRIPTION	CHECKED	APPROVED	NEXT ASSEMBLY	ITEM	QTY
4								
3								
2								
1								
0		19.09.17	ORIGINAL			DSA 36 109 0 017	3	1

MATERIAL: ALUMINIUM H32-5052	FINISH: YELLOW CC COATING	PROJ.	TOL.GEN. ± / TOL.AXIS. ± IS: 2102 (MED.)	PRJ. 109	
DRAWN: MALIKSAD	CHECKED	APPROVED	DIMNS: mm	SCALE: NTS	TITLE: TRANSFORMER MOUNTING PLATE
DATE: 13.09.17	DATE	DATE	DRG. NUMBER: DPD 36 109 0 131	SIZE: A4	ISSUE: 1
KERALA STATE ELECTRONICS DEVELOPMENT CORPORATION LIMITED				NO.OF SHEETS: 1 / 1	

RESTRICTED

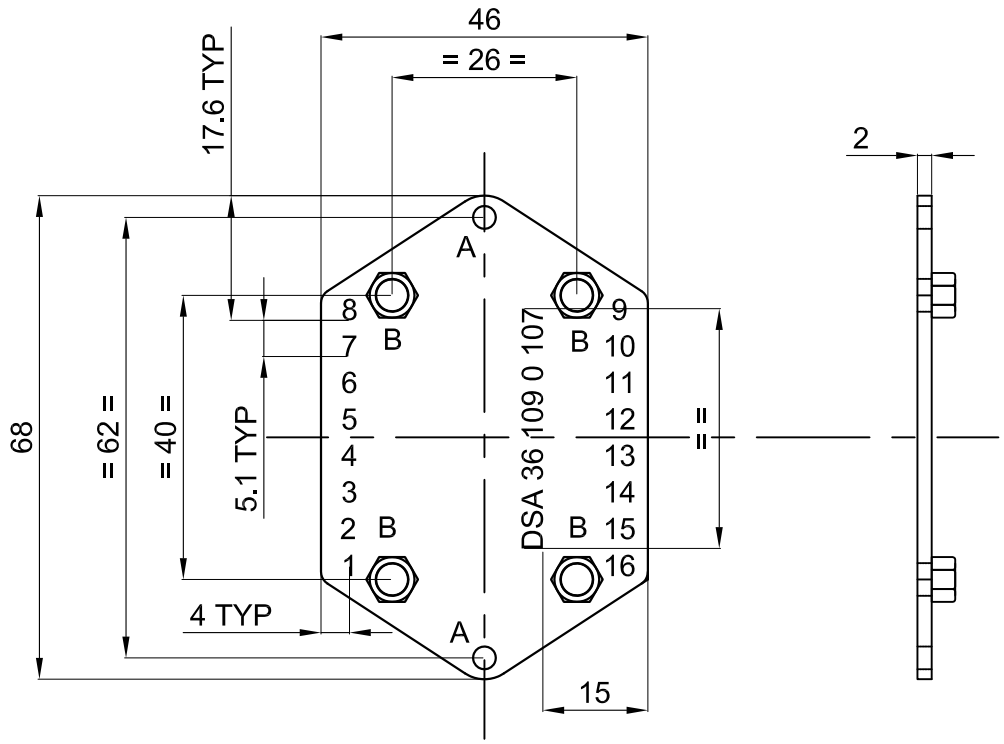

SL NO	REF	DESCRIPTION	QTY
1	A	Ø3.5	2
2	B	Ø4.6	4

NOTE

1. 3mm TEXT TO BE ENGRAVED AND FILL WITH WHITE COLOR PAINT
2. M3 RIVET NUT TO BE RIVETED ON HOLE 'B'

REV	CN.NO.	DATE	DESCRIPTION	CHECKED	APPROVED	NEXT ASSEMBLY	ITEM	QTY
4								
3								
2								
1								
0		26.08.16	ORIGINAL			DSA 36 109 0 107	5	1

MATERIAL	FINISH	PROJ.		PRJ.
2 mm ALUMINUM SHEET	25 MICRON BLACK ANODIZING		TOL.GEN. ± IS:2102 TOL.AXIS. ± (MED)	109

DRAWN	CHECKED	APPROVED	DIMNS	SCALE	TITLE
MALIKSAD			mm	NTS	TRANSFORMER TOP PLATE
DATE 26.08.16	DATE	DATE			

KERALA STATE ELECTRONICS DEVELOPMENT CORPORATION LIMITED.

DRG. NUMBER: DPD 36 109 0 134

SIZE	ISSUE
A4	1
NO.OF SHEETS	1/1

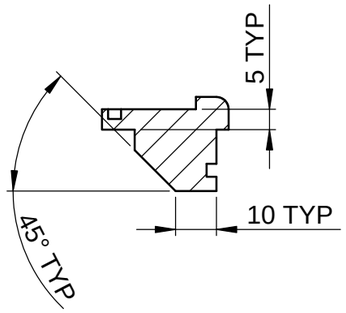

SECTION F-F

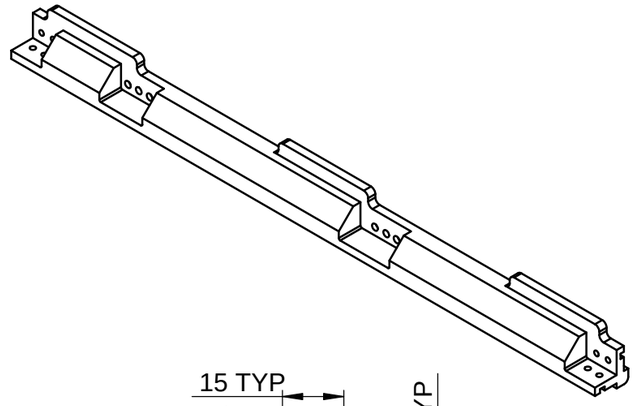

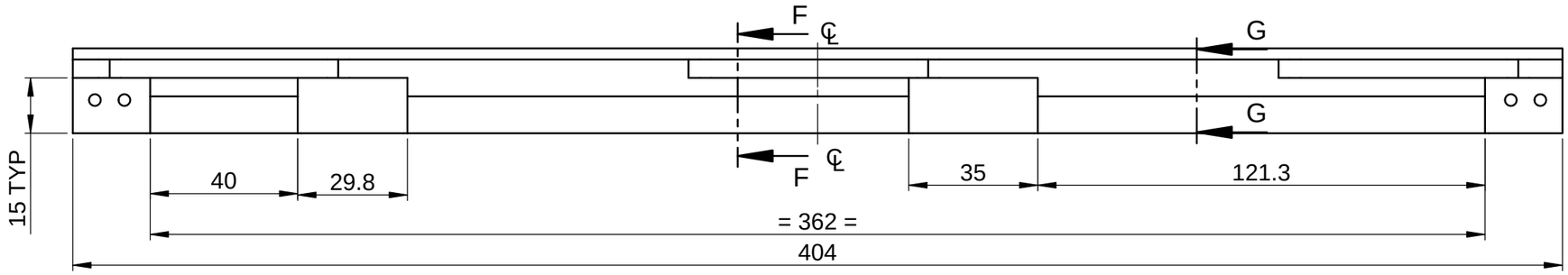

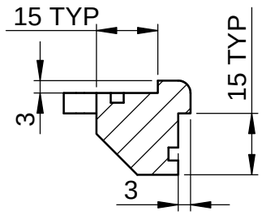

SECTION G-G

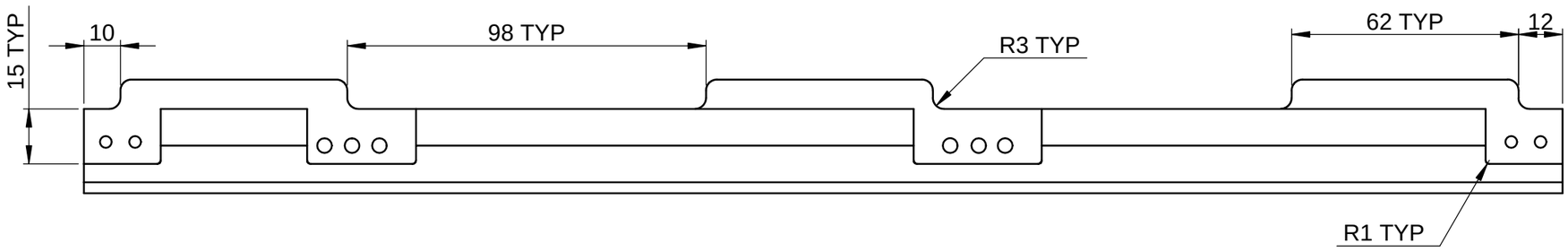

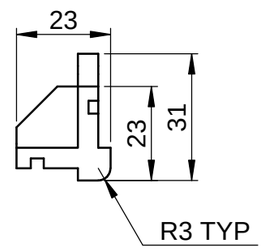

NOTE

1. AVOID SHARP CORNERS AND EDGES
2. ALL BURRS MUST BE REMOVED

SL NO	REF	DESCRIPTION	QTY
1	A	DRILL ∅3.2 ⌴ ∅6.2, ↧ 2.4	8
2	B	DRILL ∅6.2, ↧ 15 AND M6 HELICOIL TAP	6
3	C	DRILL ∅4.2 ⌴ ∅8 ↧ 2.4	4
4	D	DRILL ∅4.1 AND M4 HELICOIL TAP	2
5	E	DRILL ∅4.1 ↧ 10 AND M4 HELICOIL TAP	2

REV	CN.NO.	DATE	DESCRIPTION	CHECKED	APPROVED	NEXT ASSEMBLY	ITEM	QTY
4								
3								
2								
1								
0		19.08.17	ORIGINAL			DSA 36 109 0 020	14	1

MATERIAL: ALUMINIUM HE-30	FINISH: YELLOW CC COATING	PROJ.	TOL.GEN. ± IS:2102 TOL.AXIS. ± (MED)	PRJ. 109	
DRAWN: MALIKSAD	CHECKED	APPROVED	DIMNS: mm	SCALE: NTS	TITLE: VT FRONT LEFT FRAME
DATE 19.08.17	DATE	DATE	DRG. NUMBER: DPD 36 109 0 100	SIZE: A3	ISSUE: 1
KERALA STATE ELECTRONICS DEVELOPMENT CORPORATION LIMITED.				NO.OF SHEETS: 1/2	

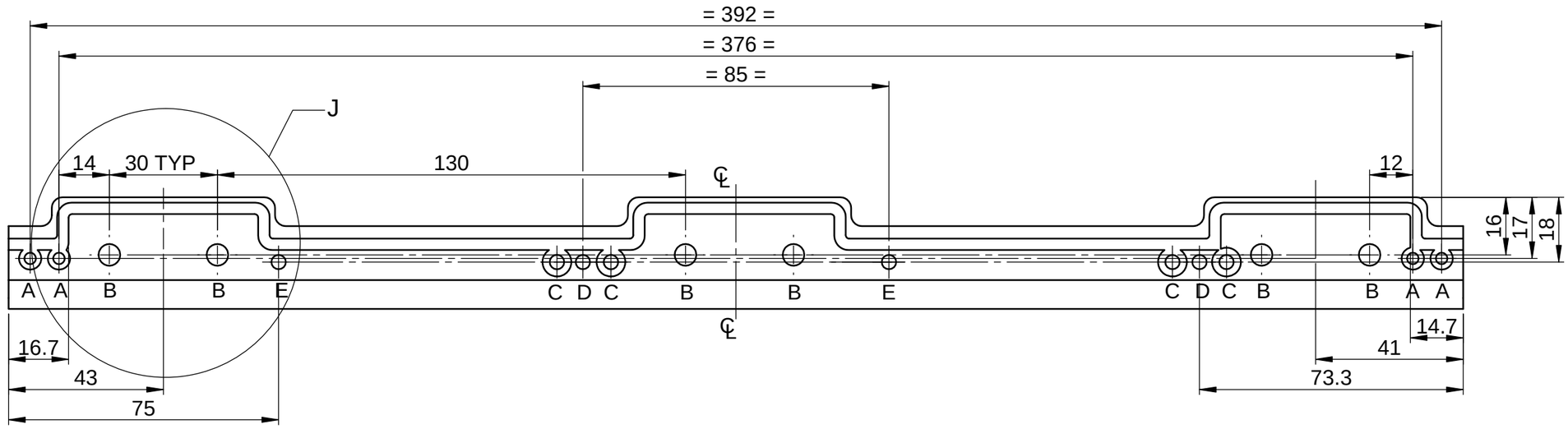

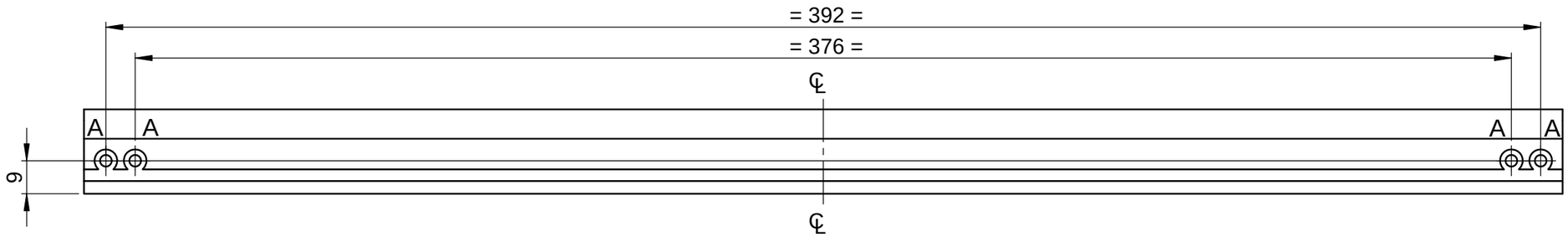

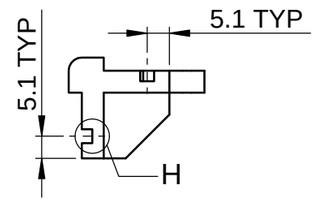

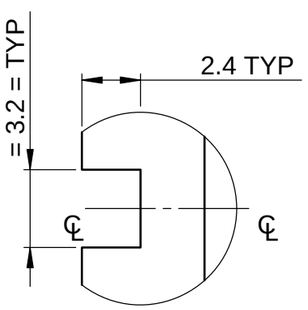

DETAIL H

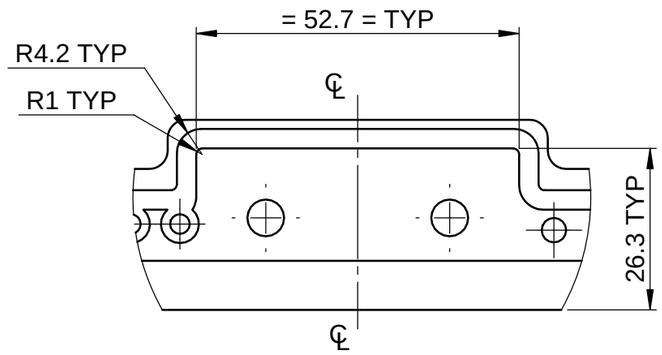

DETAIL J

REV	CN.NO.	DATE	DESCRIPTION	CHECKED	APPROVED	NEXT ASSEMBLY	ITEM	QTY
4								
3								
2								
1								
0		19.08.17	ORIGINAL			DSA 36 109 0 020	14	1

MATERIAL: ALUMINIUM HE-30	FINISH: YELLOW CC COATING	PROJ.	TOL.GEN. ± IS:2102 TOL.AXIS. ± (MED)	PRJ. 109	
DRAWN: MALIKSAD	CHECKED	APPROVED	DIMNS: mm / SCALE: NTS	TITLE: VT FRONT LEFT FRAME	
DATE 19.08.17	DATE	DATE			

KERALA STATE ELECTRONICS DEVELOPMENT CORPORATION LIMITED

DRG. NUMBER: DPD 36 109 0 100

SIZE	ISSUE
A3	1
NO.OF SHEETS	2 / 2

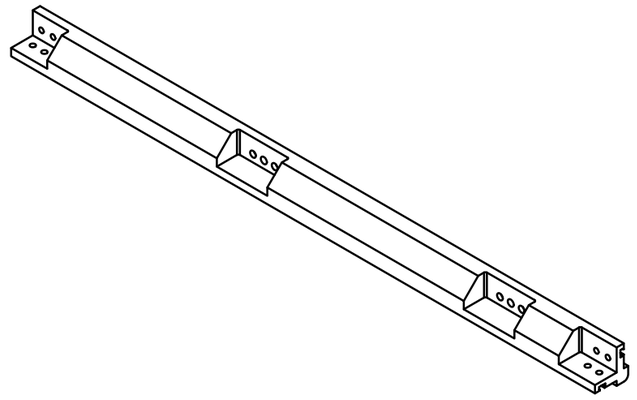

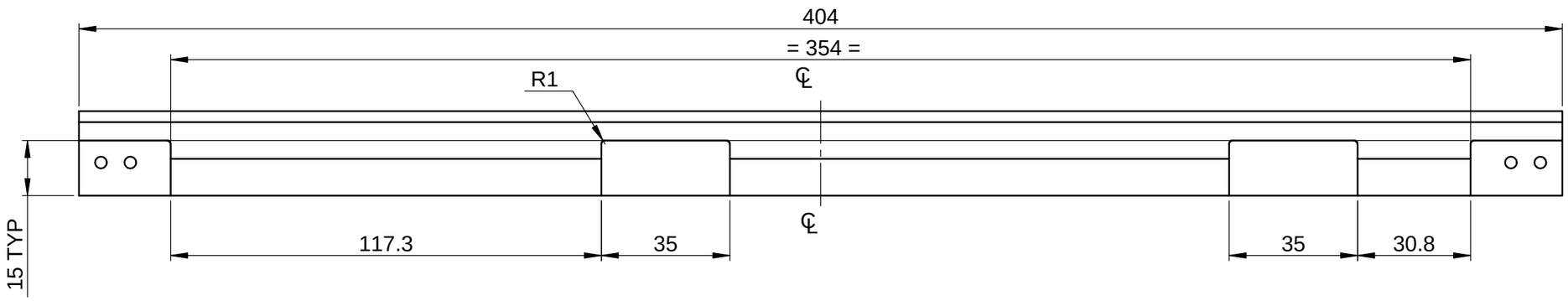

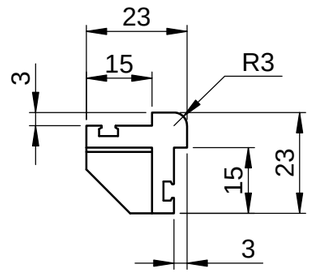

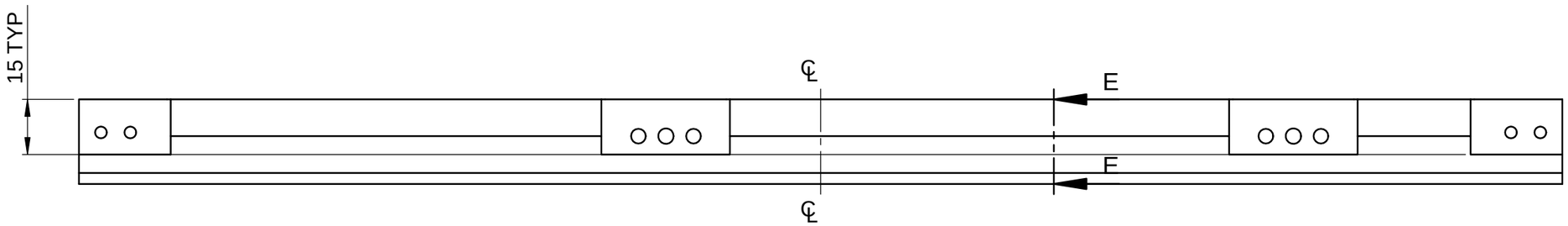

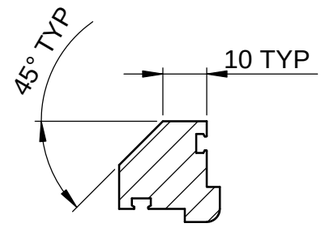

SECTION E-E

NOTE

1. AVOID SHARP CORNERS AND EDGES
2. ALL BURRS MUST BE REMOVED

SL NO	REF	DESCRIPTION	QTY
1	A	DRILL ∅3.2 ⌴ ∅6.2, ↧2.4	8
2	B	DRILL ∅4.2 ⌴ ∅8↧2.4	4
3	C	DRILL ∅ 4.1 AND M4 HELICOIL TAP	2
4	D	DRILL ∅ 4.1 ↧10 AND M4 HELICOIL TAP	2

REV	CN.NO.	DATE	DESCRIPTION	CHECKED	APPROVED	NEXT ASSEMBLY	ITEM	QTY
4								
3								
2								
1								
0		19.08.17	ORIGINAL			DSA 36 109 0 020	21	1

MATERIAL: ALUMINIUM HE-30	FINISH: YELLOW CC COATING	PROJ.	TOL.GEN. ± IS:2102 TOL.AXIS. ± (MED)	PRJ. 109	
DRAWN: MALIKSAD	CHECKED	APPROVED	DIMNS: mm / SCALE: NTS	TITLE: VT FRONT RIGHT FRAME	
DATE 19.08.17	DATE	DATE			

KERALA STATE ELECTRONICS DEVELOPMENT CORPORATION LIMITED

DRG. NUMBER: DPD 36 109 0 171

SIZE	ISSUE
A3	1
NO.OF SHEETS	1 / 2

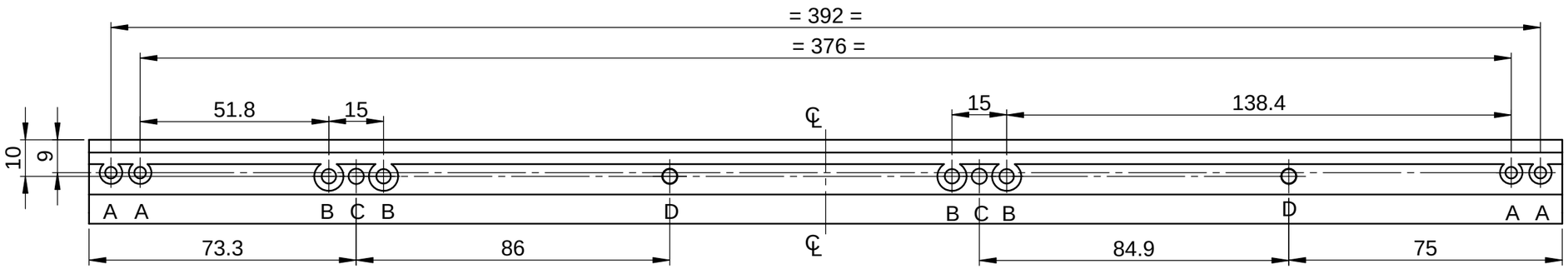

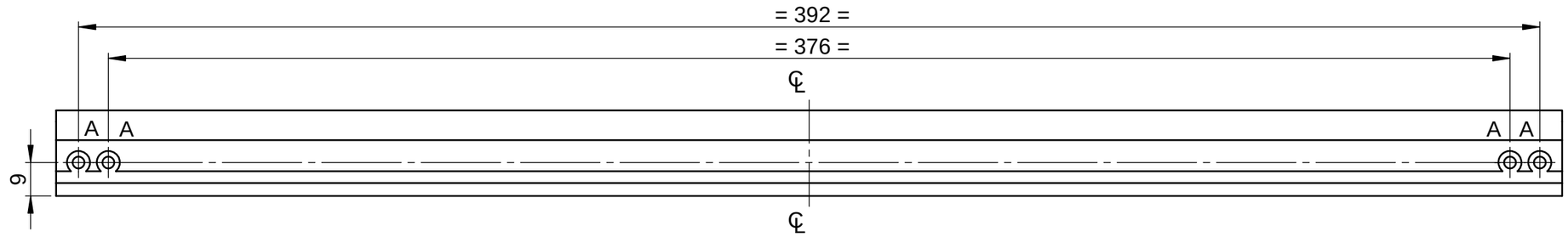

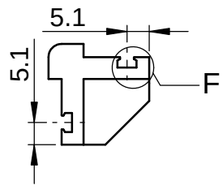

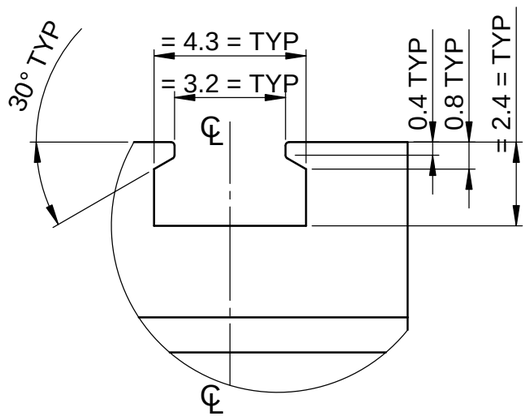

DETAIL F

REV	CN.NO.	DATE	DESCRIPTION	CHECKED	APPROVED	NEXT ASSEMBLY	ITEM	QTY
4								
3								
2								
1								
0		19.08.17	ORIGINAL			DSA 36 109 0 020	21	1

MATERIAL: ALUMINIUM HE-30	FINISH: YELLOW CC COATING	PROJ.	TOL.GEN. ± IS:2102 TOL.AXIS. ± (MED)	PRJ. 109	
DRAWN: MALIKSAD	CHECKED	APPROVED	DIMNS: mm	SCALE: NTS	TITLE: VT FRONT RIGHT FRAME
DATE 19.08.17	DATE	DATE	DRG. NUMBER: DPD 36 109 0 171	SIZE: A3	ISSUE: 1
KERALA STATE ELECTRONICS DEVELOPMENT CORPORATION LIMITED.				NO.OF SHEETS: 2 / 2	

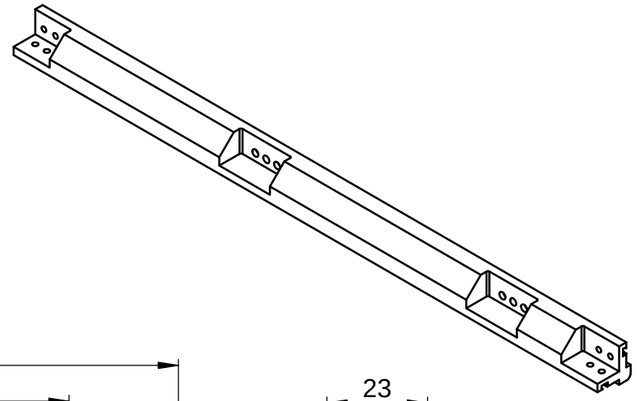

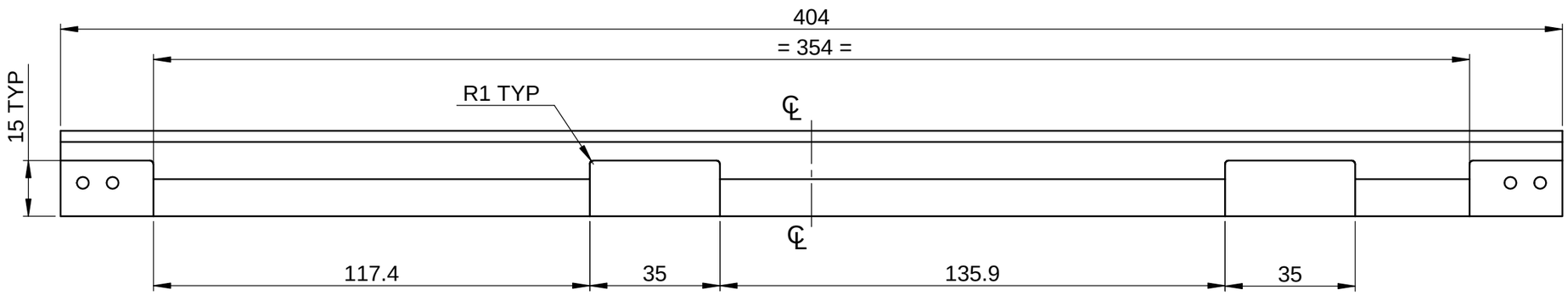

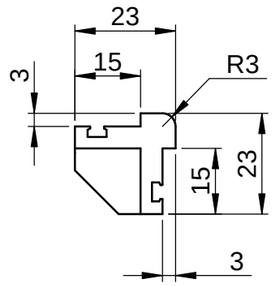

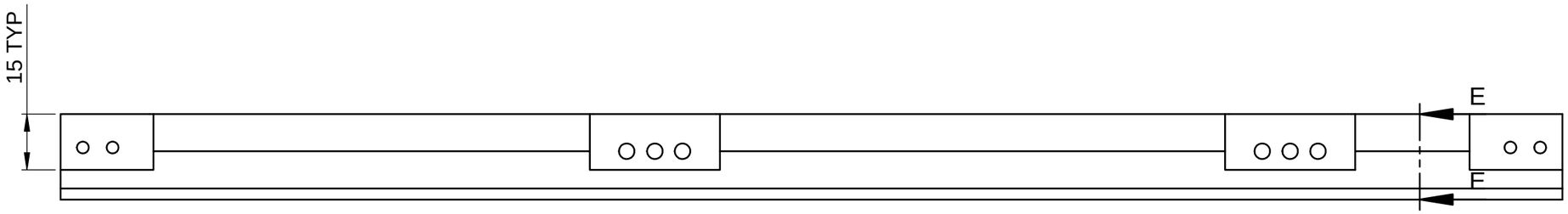

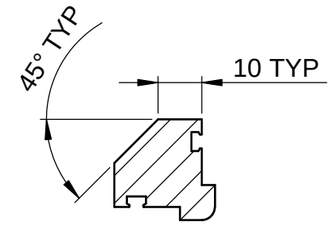

SECTION E-E

NOTE

1. AVOID SHARP CORNERS AND EDGES
2. ALL BURRS MUST BE REMOVED

SL NO	REF	DESCRIPTION	QTY
1	A	DRILL ⌀3.2 ⌴ ⌀6.2, ↧2.4	8
2	B	DRILL ⌀4.2 ⌴ ⌀8, ↧2.4	4
3	C	DRILL ⌀4.1, ↧5 AND M4 HELICOIL TAP	7
4	D	DRILL ⌀4.1 AND M4 HELICOIL TAP	2

REV	CN.NO.	DATE	DESCRIPTION	CHECKED	APPROVED	NEXT ASSEMBLY	ITEM	QTY
4								
3								
2								
1								
0		19.08.17	ORIGINAL			DSA 36 109 0 020	23	1

MATERIAL: ALUMINIUM HE-30	FINISH: YELLOW CC COATING	PROJ.	TOL.GEN. ± IS:2102 TOL.AXIS. ± (MED)	PRJ. 109	
DRAWN: MALIKSAD	CHECKED	APPROVED	DIMNS: mm / SCALE: NTS	TITLE: VT REAR LEFT FRAME	
DATE 19.08.17	DATE	DATE	DRG. NUMBER: DPD 36 109 0 174	SIZE: A3	ISSUE: 1
KERALA STATE ELECTRONICS DEVELOPMENT CORPORATION LIMITED.				NO.OF SHEETS: 1 / 2	

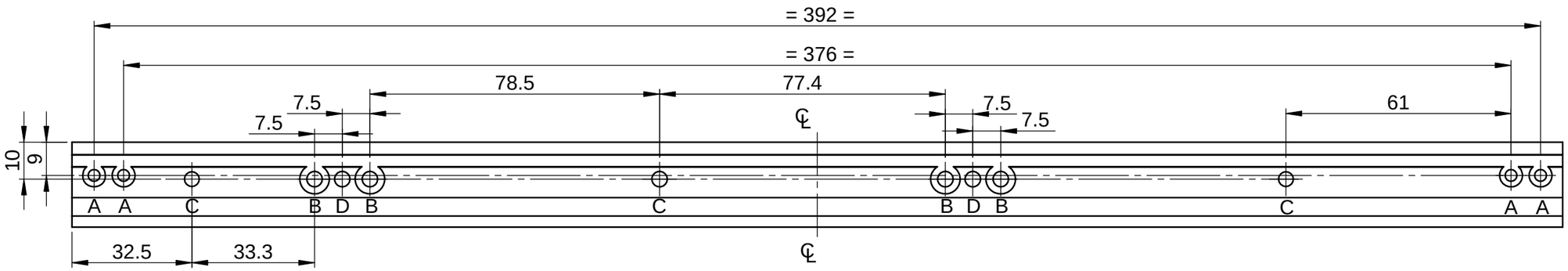

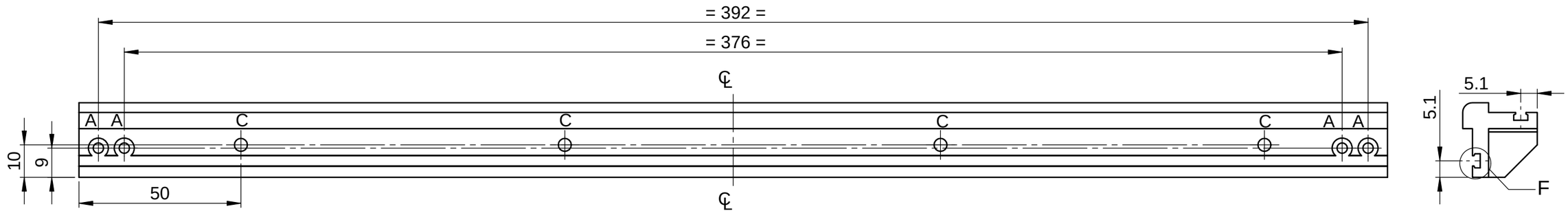

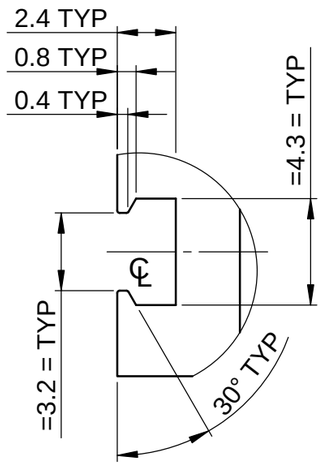

DETAIL F

REV	CN.NO.	DATE	DESCRIPTION	CHECKED	APPROVED	NEXT ASSEMBLY	ITEM	QTY
4								
3								
2								
1								
0		19.08.17	ORIGINAL			DSA 36 109 0 020	23	1

MATERIAL: ALUMINIUM HE-30	FINISH: YELLOW CC COATING	PROJ.	TOL.GEN. ± IS:2102 TOL.AXIS. ± (MED)	PRJ. 109	
DRAWN: MALIKSAD	CHECKED	APPROVED	DIMNS: mm	SCALE: NTS	TITLE: VT REAR LEFT FRAME
DATE 19.08.17	DATE	DATE			

KERALA STATE ELECTRONICS DEVELOPMENT CORPORATION LIMITED.

DRG. NUMBER: DPD 36 109 0 174

SIZE	ISSUE
A3	1
NO.OF SHEETS	2 / 2

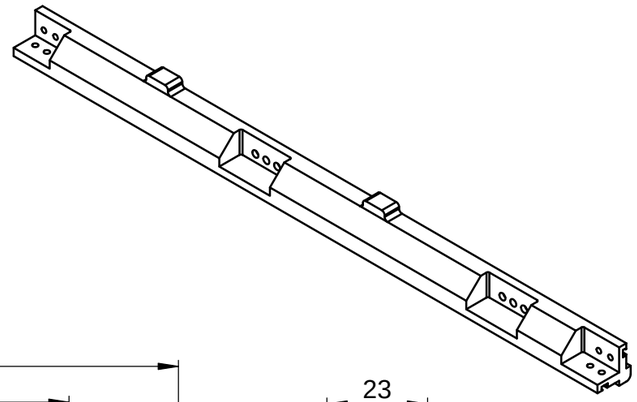

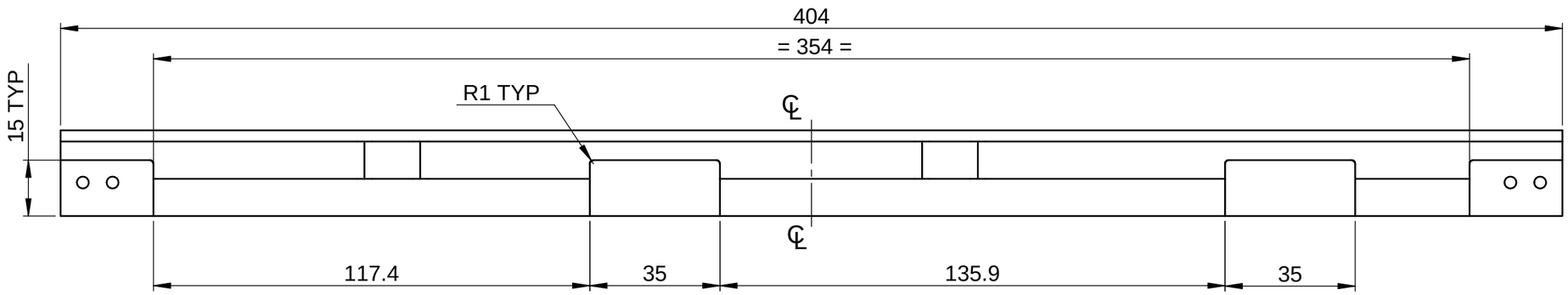

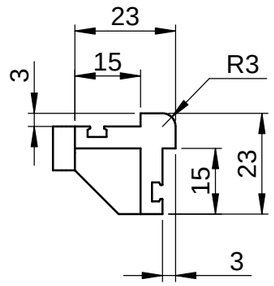

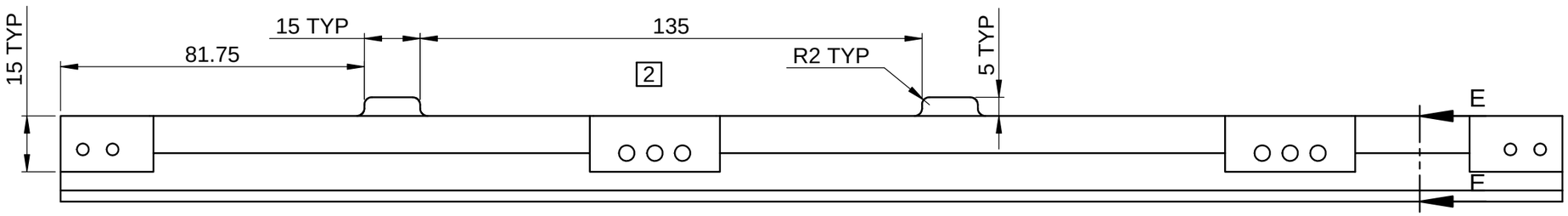

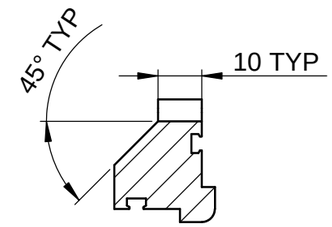

SECTION E-E

NOTE

1. AVOID SHARP CORNERS AND EDGES
2. ALL BURRS MUST BE REMOVED

SL NO	REF	DESCRIPTION	QTY
1	A	DRILL ∅3.2 ⌴ ∅6.2, ↧2.4	8
2	B	DRILL ∅4.2 ⌴ ∅8, ↧2.4	4
3	C	DRILL ∅4.1, ↧5 AND M4 HELICOIL TAP	7
4	D	DRILL ∅4.1 AND M4 HELICOIL TAP	2
5	G	DRILL ∅3.1, ↧7 AND M3 HELICOIL TAP	2

REV	CN.NO.	DATE	DESCRIPTION	CHECKED	APPROVED	NEXT ASSEMBLY	ITEM	QTY
4								
3								
2		31.01.20	REVISED					
1		22.08.19	REVISED					
0		19.08.17	ORIGINAL			DSA 36 109 0 020	23	1

MATERIAL: ALUMINIUM HE-30	FINISH: YELLOW CC COATING	PROJ.	TOL.GEN. ± IS:2102 TOL.AXIS. ± (MED)	PRJ. 109	
DRAWN: MALIKSAD	CHECKED	APPROVED	DIMNS: mm	SCALE: NTS	TITLE: VT REAR LEFT FRAME
DATE 22.08.19	DATE	DATE	DRG. NUMBER: DPD 36 109 0 174	SIZE: A3	ISSUE: 1
KERALA STATE ELECTRONICS DEVELOPMENT CORPORATION LIMITED.				NO.OF SHEETS: 1/2	

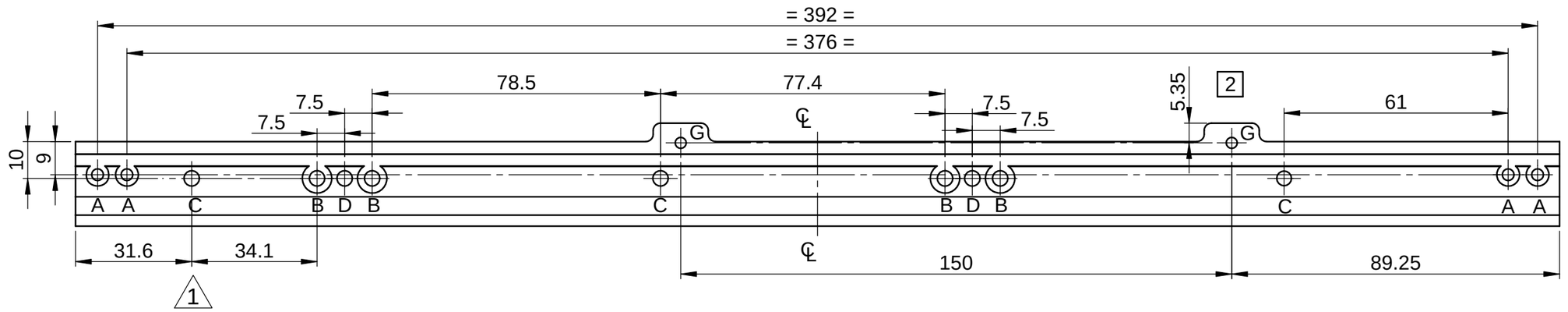

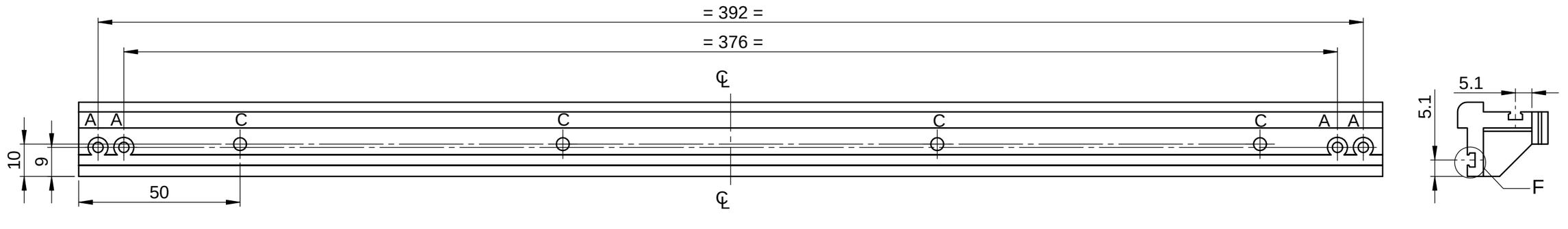

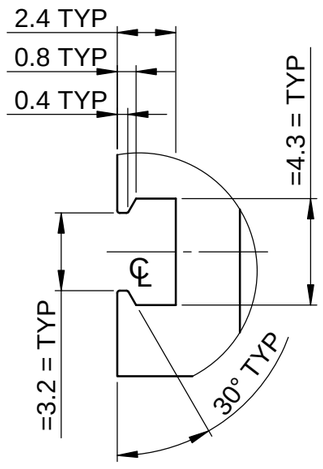

DETAIL F

REV	CN.NO.	DATE	DESCRIPTION	CHECKED	APPROVED	NEXT ASSEMBLY	ITEM	QTY
4								
3								
2		22.08.19	REVISED					
1		22.08.19	REVISED					
0		19.08.17	ORIGINAL			DSA 36 109 0 020	23	1

MATERIAL: ALUMINIUM HE-30	FINISH: YELLOW CC COATING	PROJ.	TOL.GEN. ± IS:2102 TOL.AXIS. ± (MED)	PRJ. 109	
DRAWN: MALIKSAD	CHECKED	APPROVED	DIMNS: mm	SCALE: NTS	TITLE: VT REAR LEFT FRAME
DATE 22.08.19	DATE	DATE	DRG. NUMBER: DPD 36 109 0 174	SIZE: A3	ISSUE: 1
KERALA STATE ELECTRONICS DEVELOPMENT CORPORATION LIMITED.				NO.OF SHEETS: 2 / 2	

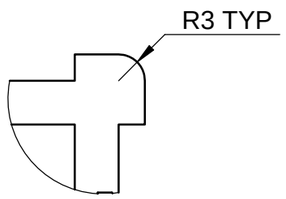

DETAIL G

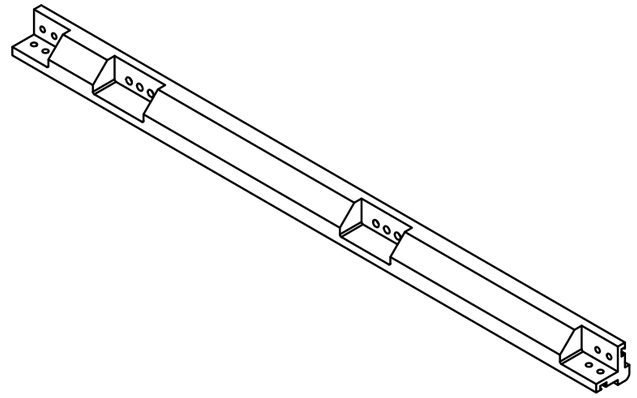

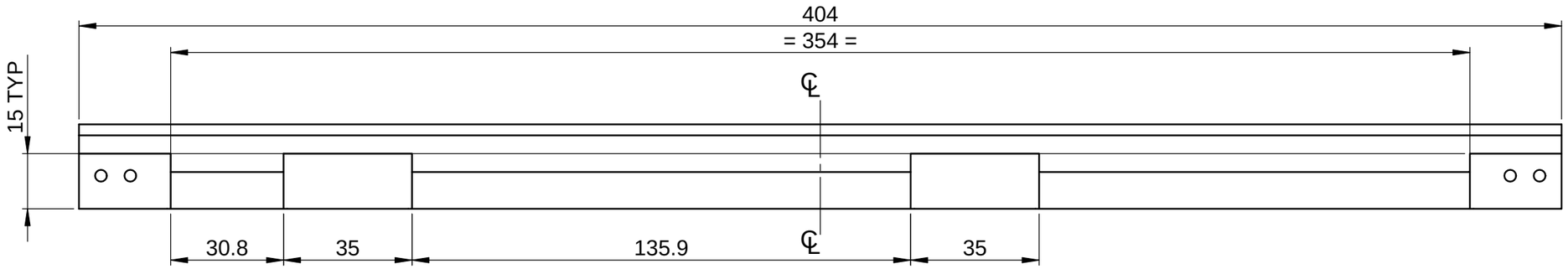

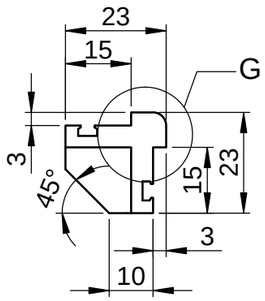

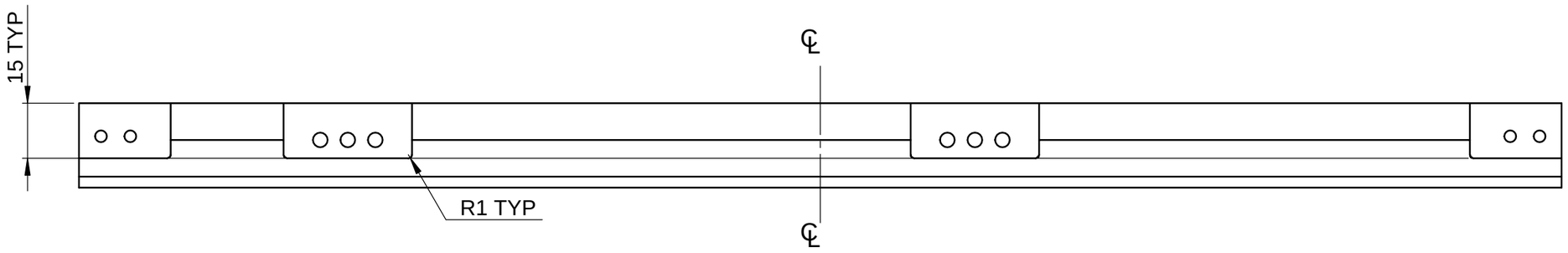

REV	CN.NO.	DATE	DESCRIPTION	CHECKED	APPROVED	NEXT ASSEMBLY	ITEM	QTY
4								
3								
2								
1		22.08.19	REVISED					
0		19.08.17	ORIGINAL			DSA 36 109 0 020	7	1

MATERIAL: ALUMINIUM HE-30	FINISH: YELLOW CC COATING	PROJ.	TOL.GEN. ± IS:2102 TOL.AXIS. ± (MED)	PRJ. 109	
DRAWN: MALIKSAD	CHECKED	APPROVED	DIMNS: mm	SCALE: NTS	TITLE: VT REAR RT FRAME
DATE 22.08.19	DATE	DATE			

KERALA STATE ELECTRONICS DEVELOPMENT CORPORATION LIMITED.

DRG. NUMBER: DPD 36 109 0 093

SIZE	ISSUE
A3	1
NO.OF SHEETS	1 / 2

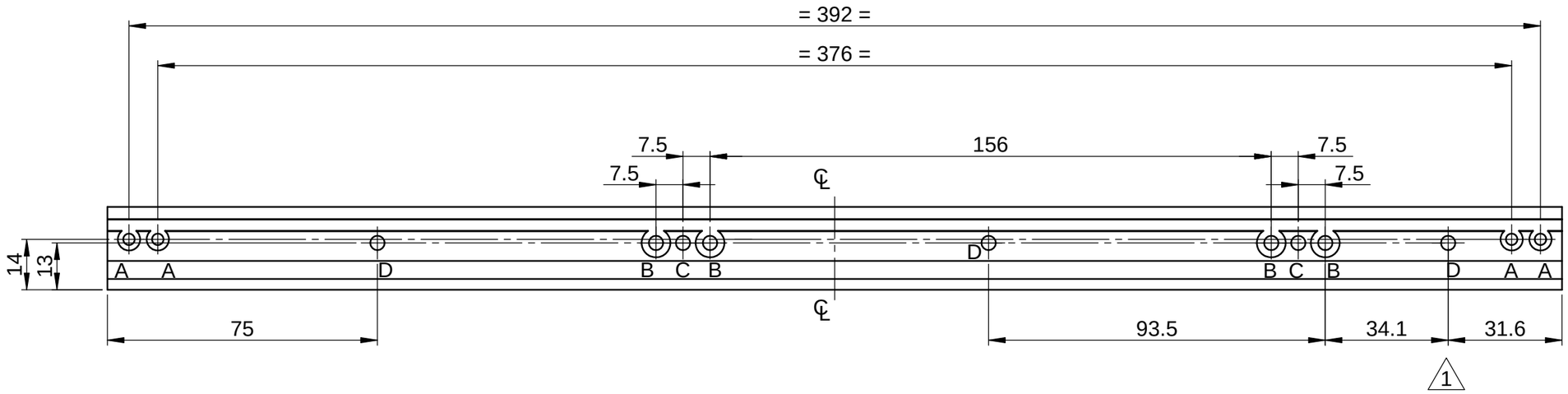

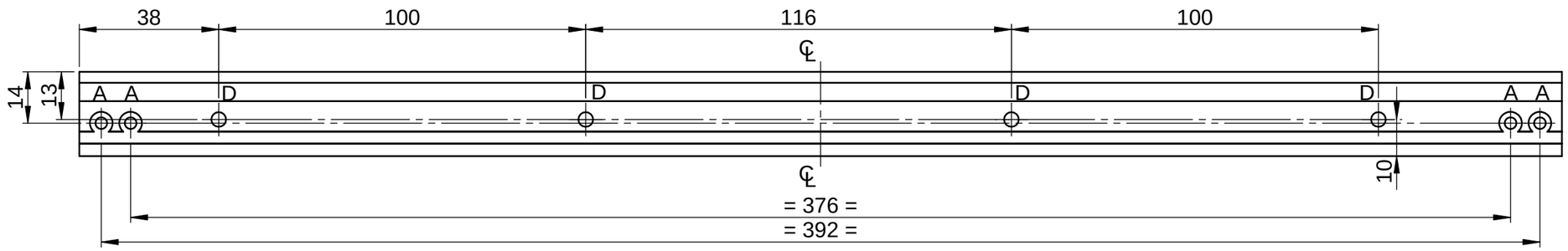

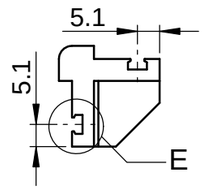

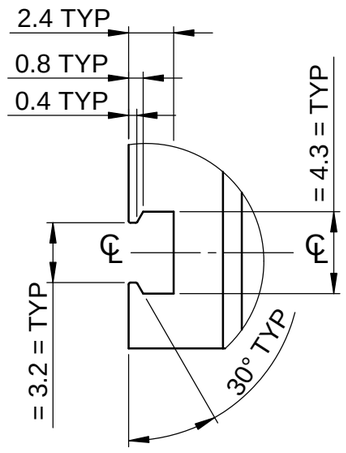

DETAIL E

NOTE

1. AVOID SHARP CORNERS AND EDGES
2. ALL BURRS MUST BE REMOVED

SL NO	REF	DESCRIPTION	QTY
1	A	DRILL ⌀3.2 ⌴ ⌀6.2, ↧2.4	8
2	B	DRILL ⌀4.2 ⌴ ⌀8, ↧2.4	4
3	C	DRILL ⌀4.1 AND M4 HELICOIL TAP	2
4	D	DRILL ⌀4.1, ↧5 AND M4 HELICOIL TAP	7

REV	CN.NO.	DATE	DESCRIPTION	CHECKED	APPROVED	NEXT ASSEMBLY	ITEM	QTY
4								
3								
2								
1		22.08.19	REVISED					
0		19.08.17	ORIGINAL			DSA 36 109 0 020	7	1

MATERIAL: ALUMINIUM HE-30	FINISH: YELLOW CC COATING	PROJ.	TOL.GEN. ± IS:2102 TOL.AXIS. ± (MED)	PRJ. 109	
DRAWN: MALIKSAD	CHECKED	APPROVED	DIMNS: mm	SCALE: NTS	TITLE: VT REAR RT FRAME
DATE 22.08.19	DATE	DATE	DRG. NUMBER: DPD 36 109 0 093	SIZE: A3	ISSUE: 1
KERALA STATE ELECTRONICS DEVELOPMENT CORPORATION LIMITED.				NO.OF SHEETS: 2 / 2	

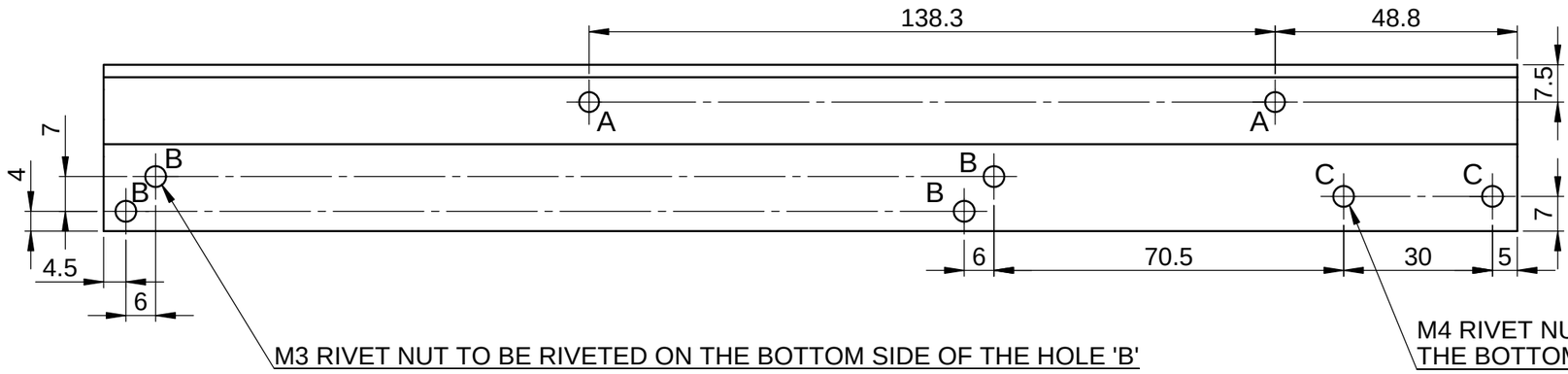

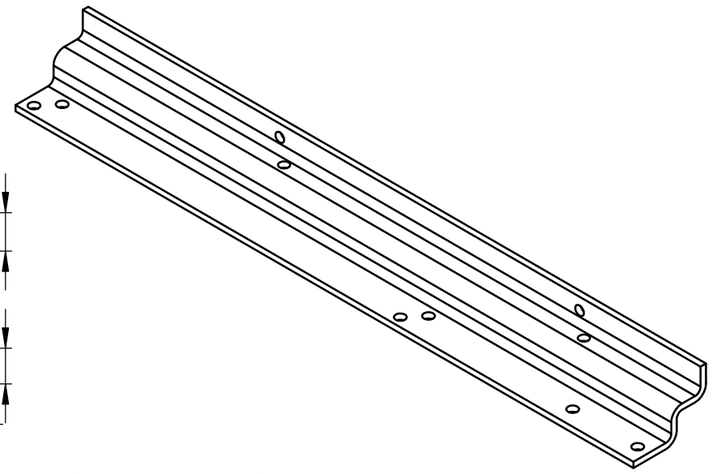

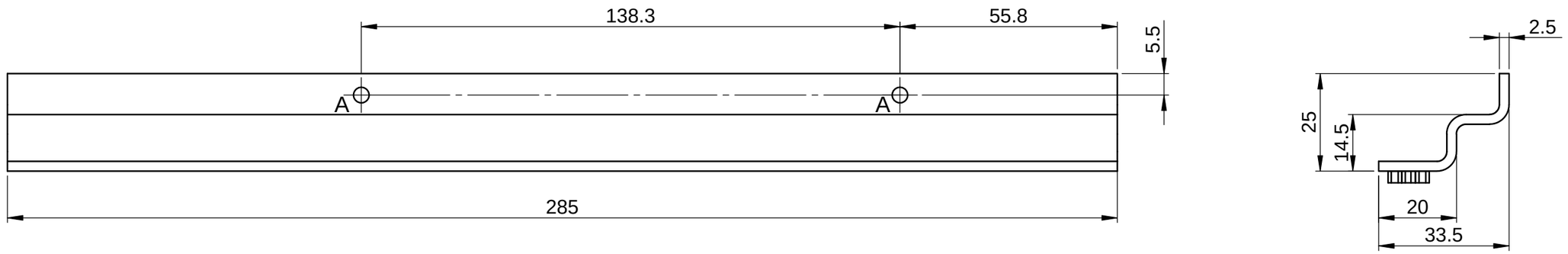

NOTE

1. AVOID SHARP CORNERS AND EDGES
2. ALL BURRS MUST BE REMOVED

SL NO	REF	DESCRIPTION	QTY
1	A	∅3.5	4
2	B	M3 RIVET NUT	4
3	C	M4 RIVET NUT	2

REV	CN.NO.	DATE	DESCRIPTION	CHECKED	APPROVED	NEXT ASSEMBLY	ITEM	QTY
4								
3								
2								
1								
0		19.08.17	ORIGINAL			DSA 36 109 0 021	10	1

MATERIAL: ALIMINIUM H32-5052	FINISH: YELLOW CC COATING	PROJ.	TOL.GEN. ± IS:2102 TOL.AXIS. ± (MED)	PRJ. 109	
DRAWN: MALIKSAD	CHECKED	APPROVED	DIMNS: mm	SCALE: NTS	TITLE: Z CLAMP 1
DATE 19.08.17	DATE	DATE	DRG. NUMBER: DPD 36 109 0 052	SIZE: A3	ISSUE: 1
KERALA STATE ELECTRONICS DEVELOPMENT CORPORATION LIMITED.				NO.OF SHEETS: 1 / 1	

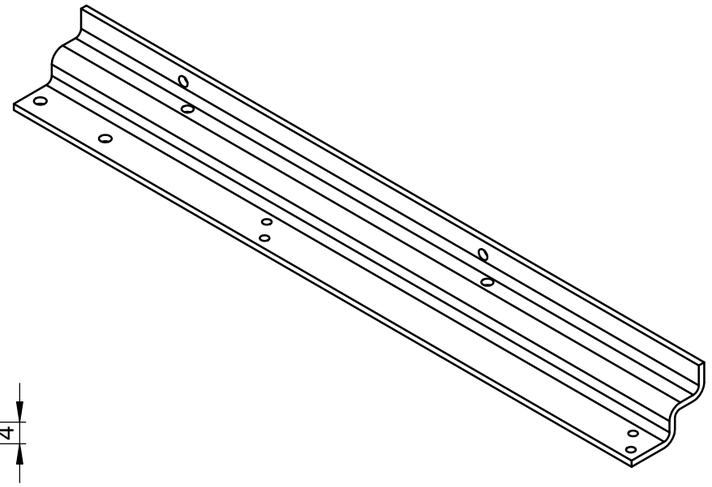

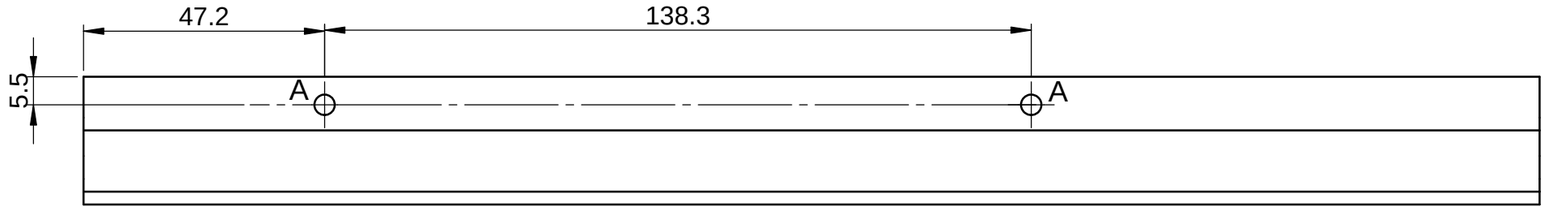

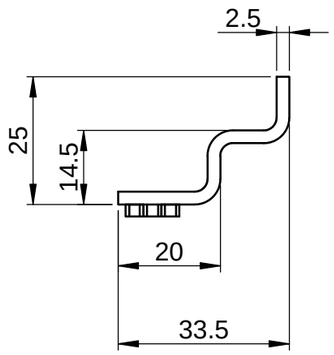

NOTE

1. AVOID SHARP CORNERS AND EDGES
2. ALL BURRS MUST BE REMOVED

SL NO	REF	DESCRIPTION	QTY
1	A	∅3.5	4
2	B	M3 RIVET NUT	4
3	C	M4 RIVET NUT	2

REV	CN.NO.	DATE	DESCRIPTION	CHECKED	APPROVED	NEXT ASSEMBLY	ITEM	QTY
4								
3								
2								
1								
0		19.08.17	ORIGINAL			DSA 36 109 0 021	7	1

MATERIAL: ALUMINIUM H32-5052	FINISH: YELLOW CC COATING	PROJ.	TOL.GEN. ± IS:2102 TOL.AXIS. ± (MED)	PRJ. 109	
DRAWN: MALIKSAD	CHECKED	APPROVED	DIMNS: mm	SCALE: NTS	TITLE: Z CLAMP 2
DATE 19.08.17	DATE	DATE	DRG. NUMBER: DPD 36 109 0 050	SIZE: A3	ISSUE: 1
KERALA STATE ELECTRONICS DEVELOPMENT CORPORATION LIMITED.				NO.OF SHEETS: 1 / 1	